SHEA
CONCRETE PRODUCTS

UTILITY PRODUCT CATALOG 2018

A TRADITION OF STRENGTH

800.696.7432 www.SheaConcrete.com

Refer to our main catalog for a complete list of precast products.

NAHB National Association of Home Builders

nepca

NPCA Precast ... The Concrete Solution

BBB ACCREDITED BUSINESS

SHEA CONCRETE PRODUCTS

TABLE OF CONTENTS

TITLE	PAGE	FILE NAME	REV. DATE
SECTION I – SHEA STANDARDS			
A. LIGHT POLE BASES			
ROUND LIGHT POLE BASE	I.A.1	LPBRNDXHEIGHT	01/10/2018
SQUARE LIGHT POLE BASE	I.A.2	LPBSQXHEIGHT	01/10/2018
B. HANDHOLES			
12” X 12” X 20.5”	I.B.1	HANDHOLE 12X12	01/15/2018
12” X 24” X 33”	I.B.2	HANDHOLE 12X24	01/15/2018
24” X 24” X 24”	I.B.3	HANDHOLE 24X24	01/15/2018
36” X 36” H-10	I.B.4	HANDHOLE 36X36 H-10	12/03/2018
36” X 36” H-20	I.B.5	HANDHOLE 36X36 H-20	01/16/2018
4’ X 4’ X 4’	I.B.6	HANDHOLE 48 X 48	11/13/2018
PULLBOX 5’ X 5’ X 5’	I.B.7	PULLBOX 5X5X5	02/05/2018
C. MANHOLES			
3’ X 3’ X 2’-6”	I.C.1	MH 3X3X2-6	02/05/2018
4’ X 4’ X 4’	I.C.2	MH 4X4X4	02/05/2018
4’ X 6’ X 6’	I.C.3	MH 4X6X6	02/05/2018
4’ X 6’ X 7’	I.C.4	MH 4X6X7	02/05/2018
4’ X 8’ X 6’	I.C.5	MH 4X8X6	02/05/2018
4’ X 8’ X 7’	I.C.6	MH 4X8X7	02/05/2018
5’ X 5’ X 5’	I.C.7	MH 5X5X5	11/13/2018
5’ X 7’ X 6’-6”	I.C.8	MH 5X7X6-6	02/05/2018
5’ X 10’ X 7’	I.C.9	MH 5X10X7	02/05/2018
6’ X 6’ X 7’	I.C.10	MH 6X6X7	02/05/2018
6’ X 8’ X 7’	I.C.11	MH 6X8X7	11/13/2018
6’ X 12’ X 7’	I.C.12	MH 6X12X7	02/06/2018
8’ X 8’ X 8’	I.C.13	MH 8X8X8	02/06/2018
D. CABLE TRENCHES			
CABLE TRENCH 20X15 MEDIUM DUTY	I.D.1	CT 20X15MD	06/06/2018
CABLE TRENCH 20X16 HEAVY DUTY	I.D.2	CT 20X16HD	06/06/2018
CABLE TRENCH 24X15 MEDIUM DUTY	I.D.3	CT 24X15MD	06/06/2018
CABLE TRENCH 30X15 MEDIUM DUTY	I.D.4	CT 30X15MD	06/06/2018
CABLE TRENCH 30X16 HEAVY DUTY	I.D.5	CT 30X16HD	06/06/2018
STANDARD CABLE TRENCH 2’2” X 3’ X 8’	I.D.6	CT 26X36HD	06/06/2018
E. MISCELLANEOUS			
THRUST BLOCKS	I.E.1	THRUST BLOCKS	06/07/2018
PROPANE AND GENERATOR PADS	I.E.2	PROPANE PADS	06/07/2018
SECTION II – EVERSOURCE MASSACHUSETTS			
A. ACCESSORIES			
EVERSOURCE – MA STANCHIONS	II.A.1	ES-MA GALVANIZED STANCHIONS	08/21/2017

SHEA CONCRETE PRODUCTS

TABLE OF CONTENTS

TITLE	PAGE	FILE NAME	REV. DATE
B. MANHOLES			
M1201 4'W X 4'L X 4'H	II.B.1	ES-MA M1201	08/21/2017
M1202 4'W X 6'L X 6'H	II.B.2	ES-MA M1202	08/21/2017
M1203 6'W X 10'L X 6'H	II.B.3	ES-MA M1203	08/23/2017
M1204 6'W X 10'L X 8'H	II.B.4	ES-MA M1204	08/23/2017
M1205 7'W X 13'L X 8'H	II.B.5	ES-MA M1205	09/01/2017
M1207 3'W X 3'L X 4'H	II.B.6	ES-MA M1207	09/08/2017
M1208 4'W X 4'L X 4'H	II.B.7	ES-MA M1208	09/08/2017
M1209 5'W X 7'L X 6'-6"H	II.B.8	ES-MA M1209	09/15/2017
M1210 5'W X 10'L X 7'H	II.B.9	ES-MA M1210	09/22/2017
M1211 10'W X 13'L X 6'-6"H	II.B.10	ES-MA M1211	09/22/2017
M1212 10'W X 13'L X 8'H	II.B.11	ES-MA M1212	09/22/2017
M1214 8'W X 14'L X 8'H	II.B.12	ES-MA M1214	09/22/2017
M1215 6'W X 13'L X 6'-6"H	II.B.13	ES-MA M1215	12/08/2017
M1216 5'W X 5'L X 5'H	II.B.14	ES-MA M1216	12/08/2017
M1220 5'W X 5'L X 4'-6H	II.B.15	ES-MA M1220	12/18/2017
C. TRANSFORMER PADS			
3801-1 6' X 6'-6" X 12"	II.C.1	ES-MA TP 3801-1	12/18/2017
3801-2 8' X 8' X 12"	II.C.2	ES-MA TP 3801-2	12/18/2017
3803 6'-5" X 7' X 12"	II.C.3	ES-MA TP 3803	12/19/2017
3808 6'-5" X 7'-2" X 12"	II.C.4	ES-MA TP 3808	12/19/2017
D. TRANSFORMER VAULTS			
SINGLE PHASE 45" X 45" X 48"	II.D.1	ES-MA 1PH XFMR VAULT	12/03/2018
3 PHASE 72" X 72" X 48"	II.D.2	ES-MA 3PH XFMR VAULT	12/03/2018
1000KVA XFMR VAULT 84" X 90" X 52"	II.D.3	ES-MA 1000KVA XFMR VAULT	12/03/2018
3801-1 XFMR VAULT 6' X 6'-6" X 4'-4"	II.D.4	ES-MA 3801-1 XFMR VAULT	12/19/2017
3801-2 XFMR VAULT 8' X 8' X 4'-4"	II.D.5	ES-MA 3801-2 XFMR VAULT	12/19/2017
SECTION III – EVERSOURCE NEW HAMPSHIRE			
A. MISCELLANEOUS			
53-125 SINGLE PHASE SECTOR CABINET	III.A.1	ES-NH 53-125 SECTOR CAB	01/03/2018
53-128 SINGLE PHASE SECTOR CABINET	III.A.2	ES-NH 53-128 SECTOR CAB	01/03/2018
PULLBOX (GRASSY AREA)	III.A.3	EVERSOURCE PULLBOX GRASSY AREA	01/05/2018
SPLICE PIT	III.A.4	EVERSOURCE_SPLICE PIT	11/28/2017
B. MANHOLES			
R10001-1 6'W X 12'L X 7'H	III.B.1	ES-NH MH R10001-1	05/29/2018
R10001-2 6'W X 12'L X 7'H	III.B.2	ES-NH MH R10001-2	07/25/2017
R10001-3 6'W X 12'L X 7'H	III.B.3	ES-NH MH R10001-3	07/14/2015
C. TRANSFORMER PADS			
53-102 TRANSFORMER PAD 25-75 KVA	III.C.1	ES-NH TP 53-102	01/02/2018
53-102L TRANSFORMER PAD 100 TO 250 KVA	III.C.2	ES-NH TP 53-102L	01/02/2018
53-111 TRANSFORMER PAD 75-500 KVA	III.C.3	ES-NH TP 53-111	03/21/2018
53-116 3-PHASE TRANSFORMER PAD 750-2000 KVA	III.C.4	ES-NH TP 53-116	03/21/2018

SHEA CONCRETE PRODUCTS

TABLE OF CONTENTS

TITLE	PAGE	FILE NAME	REV. DATE
SECTION IV – NATIONAL GRID			
A. HANDHOLES			
38" X 54" X 24" UM19	IV.A.1	NGHH38X54-24	12/21/2017
38" X 54" X 48" UM19	IV.A.2	NGHH38X54-48	12/21/2017
B. LIGHT POLE BASES			
24" SQUARE X 48" H SF01	IV.B.1	NGMS6640LPB	12/21/2017
24" SQUARE X 48" H SF02	IV.B.2	NGMS6641LPB	12/21/2017
24" SQUARE X 48" H SF03	IV.B.3	NGMS6642LPB	12/21/2017
24" SQUARE X 60" H SF10	IV.B.4	NGMS6650LPB	12/21/2017
24" SQUARE X 60" H SF11	IV.B.5	NGMS6651LPB	12/21/2017
C. UTILITY MANHOLES			
6' X 13' X 6'-6" UM22	IV.C.1	NGRID UM22	12/22/2017
3-WAY MANHOLE 10' X 13' X 6'-6" UM23	IV.C.2	NGRID UM23	12/27/2017
5' X 9' X 7' UM39	IV.C.3	NGRID UM39	12/27/2017
D. SWITCHGEAR			
6' X 13' X 6'-6" UM20	IV.D.1	NGSWITCHGEARMH	01/02/2017
7' X 14' X 6'-6" UM21	IV.D.2	NG_LARGESWITCHGEAR_MH	01/02/2017
SWITCHGEAR COLLAR "A"	IV.D.3	NGSWG COLLAR A	01/03/2017
SWITCHGEAR COLLAR "B"	IV.D.4	NGSWG COLLAR B	01/03/2017
E. TRANSFORMER PADS			
64" X 81" X 10" UF8A	IV.E.1	NG 75-500KVA	01/04/2017
OIL CONTAINMENT CURB 75-500 KVA UF7A	IV.E.2	NG CURB500KVA	01/04/2017
82" X 83" X 10" UF8B	IV.E.3	NG 750-2500KVA	01/04/2017
OIL CONTAINMENT CURB 750-2500 KVA UF7B	IV.E.4	NG CURB2500KVA	01/04/2017
62" X 85" X 10" UF8C	IV.E.5	NG 75-300KVA	01/04/2017
84" X 96" X 10" UF8D	IV.E.6	NG 2585 TP	01/04/2017
F. TRANSFORMER VAULTS			
62" X 85" X 2'-6"	IV.F.1	NGRID MS 2584	01/04/2017
84" X 96" X 2'-6"	IV.F.2	NGRID MS 2585	01/04/2017
SECTION V – NEW HAMPSHIRE CO-OP			
A. STANDARD			
U5-4 SINGLE PHASE PULL VAULT	V.A.1	U5-4 SINGLE PHASE PULL VAULT	12/22/2017
U5-4 SINGLE PHASE TRANSFORMER ASSEMBLY	V.A.2	U5-4 SINGLE PHASE TRANSFORMER	12/26/2017
U5-5 SINGLE PHASE SECTIONALIZER VAULT (30" CAB)	V.A.3	U5-4 SINGLE PHASE SEC VAULT 30	06/22/2015
U5-5 SPLICING & PULLING VAULT	V.A.4	U5-5 SINGLE PHASE SPLICE PULL	06/22/2015
U5-5 TRANSFORMER VAULT	V.A.5	U5-5 SINGLE PHASE TRANS	06/22/2015
U5-5 THREE PHASE 7.2 KV SECTIONALIZER VAULT 48"	V.A.6	U5-5 THREE PHASE SEC 48	06/22/2015
U5-5 THREE PHASE 14.2KV SECTIONALIZER VAULT 66"	V.A.7	U5-5 THREE PHASE SEC 66	06/22/2015
U5-5 THREE PHASE 7.2KV SEC VAULT – PLYMOUTH 48"	V.A.8	U5-5 THREE PHASE SEC 48 PLY	06/22/2015
U5-7 THREE PHASE TRANSFORMER VAULT	V.A.9	U5-7 THREE PHASE TRANS	11/02/2016

SHEA CONCRETE PRODUCTS

TABLE OF CONTENTS

TITLE	PAGE	FILE NAME	REV. DATE
U5-7 THREE PHASE SECTIONALIZER VAULT	V.A.10	U5-7 THREE PHASE SEC VAULT	10/26/2016
U5-6B UNDERWATER CABLE COVER	V.A.11	U5-6B UNDERWATER CABLE COVER	12/28/2017

SECTION VI – LIBERTY

A. HANDHOLES

LU-MS3334	VI.A.1	LU-MS3334_HH_SQOPEN	05/25/18

B. UTILITY MANHOLES

LU-MS3462 2-WAY DISTRIBUTION MANHOLE	VI.B.1	LU-MS3462_2WAY DIST MAN	04/06/2018
LU-MS3464 3-WAY DISTRIBUTION MANHOLE	VI.B.2	LU-MS3464_3WAY DIST MAN	02/27/2018
LU-MS3465 4-WAY DISTRIBUTION MANHOLE	VI.B.3	LU-MS3465_4WAY DIST MAN	04/06/2018
5' X 9' X 7' MANHOLE	VI.B.4	LU-MSUM39	04/06/2018

C. SWITCHGEAR

LU-MS3467 15KV SWITCHGEAR MANHOLE	VI.C.1	LU-MS3467 SWITCHGEAR MANHOLE	05/25/2018

D. TRANSFORMER PADS

LU-MS2582 3-PHASE T.P. 75-500 KVA	VI.D.1	LU-MS2582_NG44-113_TPAD	05/15/2015
OIL CURB ASSEMBLY 3-PHASE T.P. 75-500 KVA	VI.D.2	LU-MS2582_OIL CONTAINMENT	02/28/2018
LU-MS2583 3-PHASE T.P. 750-2500 KVA	VI.D.3	LU-MS2583_NG44-114_TPAD	02/28/2018
OIL CURB ASSEMBLY 3-PHASE T.P. 750-2500 KVA	VI.D.4	LU-MS2583_OIL CONTAINMENT	02/28/2018

SECTION VII - UNITIL

A. STANDARD

2-3-11 SINGLE PHASE PULL BOX	VII.A.1	UNITIL 2-3-11	12/11/2014
2-3-12 3-PHASE PULL BOX	VII.A.2	UNITIL 2-3-12	12/11/2014
2-3-13 SINGLE PHASE TRANSFORMER	VII.A.3	UNITIL 2-3-13	01/11/2018
2-3-14 3-PHASE TRANSFORMER	VII.A.4	UNITIL 2-3-14	01/11/2018
2-3-15 SINGLE PHASE SECTIONALIZING PAD & CAB	VII.A.5	UNITIL 2-3-15	01/11/2018
2-3-16 3-PHASE SECTIONALIZING PAD & CABINET	VII.A.6	UNITIL 2-3-16	01/11/2018

SECTION VIII - MUNICIPALITIES

A. BOSTON

LIGHT BASE 17" SQUARE X 60" TALL	VIII.A.1	BOS STD LPB	05/09/2018
HANDHOLE 12" X 24" X 33"	VIII.A.2	BOS STD 12X24 HH	05/09/2018

B. BRAINTREE

TRANSFORMER PAD 225-1500KVA 8' X 8' X 12"	VIII.B.1	BELD 225-1500KVA	05/08/2018
TRANSFORMER PAD 25-100 KVA 4' X 4' X 12"	VIII.B.2	BELD 25-100 KVA	05/08/2018

C. CONCORD

225 & 300 KVA 82" X 96" X 10"	VIII.C.1	CMLP 300KVA	05/08/2018

D. HINGHAM

TAPERED LIGHT BASE FE-9 17" TO 22" X 40" TALL	VIII.D.1	HINGHAM FE-9	05/09/2018

SHEA CONCRETE PRODUCTS

TABLE OF CONTENTS

TITLE	PAGE	FILE NAME	REV. DATE
E. MASSDOT			
MANHOLE SD2.012 4' X 4' X 5'	VIII.E.1	SD2.012	05/09/2018
HANDHOLE SD2.022 13" X 24"	VIII.E.2	SD2.022	05/09/2018
HANDHOLE SD2.023 24" X 24"	VIII.E.3	SD2.023	05/09/2018
PULLBOX SD2.030 8" X 23"	VIII.E.4	SD2.030	05/09/2018
SIGNAL FOUNDATION SD3.030 20" SQ X 30" TALL	VIII.E.5	SD3.030	05/10/2018
F. NORWOOD			
LIGHT MANHOLE 6' X 10' X 6'	VIII.F.1	NORWOOD 6X10	02/06/2018
G. PEABODY			
75-500 KVA 72" X 84" X 10"	VIII.G.1	PL 75-500KVA	05/09/2018
750-1500 KVA 84" X 84" X 10"	VIII.G.2	PL 750-1500KVA	05/09/2018
H. READING			
MUNICIPAL LIGHT HANDHOLE 4' X 6' X 4'	VIII.H.1	RMLD 4X6	05/09/2018

SHEA CONCRETE PRODUCTS
New England's Premier Precaster
800-696-7432 (SHEA)
www.sheaconcrete.com
MAILING ADDRESS: 87 HAVERHILL RD AMESBURY, MA 01913

ROUND LIGHT POLE BASE

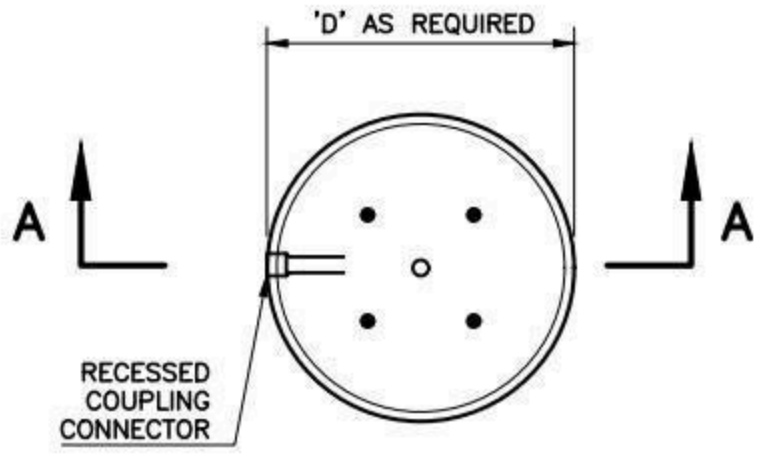

PLAN

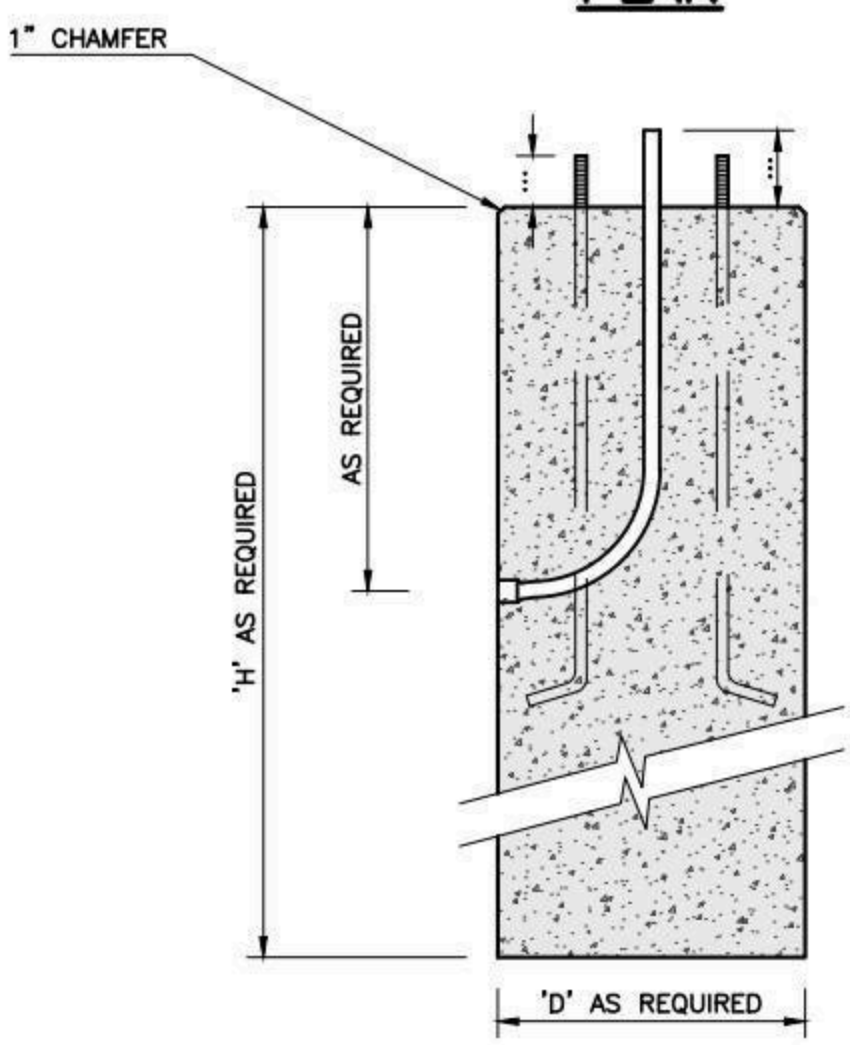

SECTION A–A

NOTES:

1. CONCRETE MINIMUM 5,000 PSI AFTER 28 DAYS.
2. CONDUIT, ANCHOR BOLTS AND TEMPLATE SUPPLIED BY OTHERS.
3. LIGHT POLE BASE SIZE IS TO BE SPECIFIED BY A QUALIFIED ENGINEER.
4. TYPICAL BASE DIAMETERS 'D' INCLUDE: 12", 18", 24", AND 30".
5. TYPICAL BASE HEIGHTS 'H' RANGE FROM 4' TO 7'.
6. OTHER BASE SIZES AVAILABLE UPON REQUEST.
7. * REPLACE 'D' AND 'H' WITH BASE DIAMETER AND HEIGHT IN SHEA PRODUCT ID.

SHEA PRODUCT ID: LPB'D'RX'H'*	FILE NAME: LPBRNDXHEIGHT		
WEIGHT (LBS): VARIES	DRAWN BY: L.P.	DATE: 1/10/2018	PAGE: I.A.1

NPCA CERTIFIED PLANT

Specifications subject to change without notice

SHEA CONCRETE PRODUCTS
New England's Premier Precaster
800-696-7432 (SHEA)
www.sheaconcrete.com
MAILING ADDRESS: 87 HAVERHILL RD AMESBURY, MA 01913

SQUARE LIGHT POLE BASE

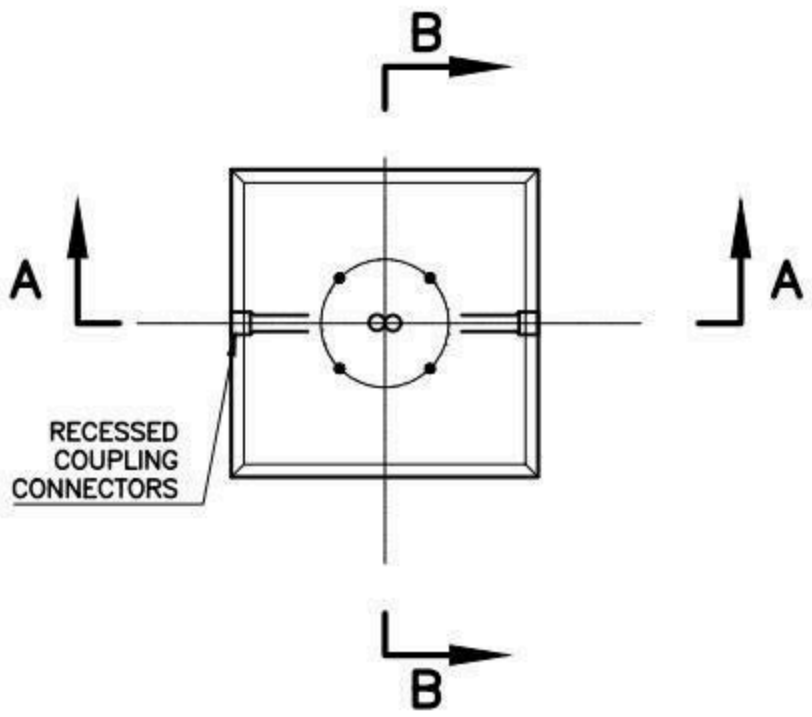

PLAN

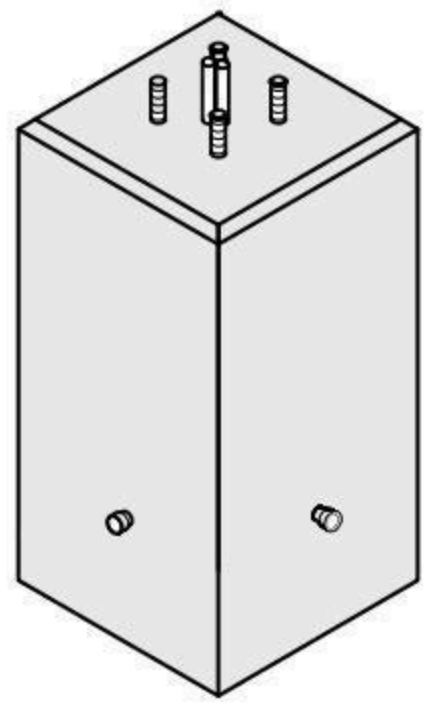

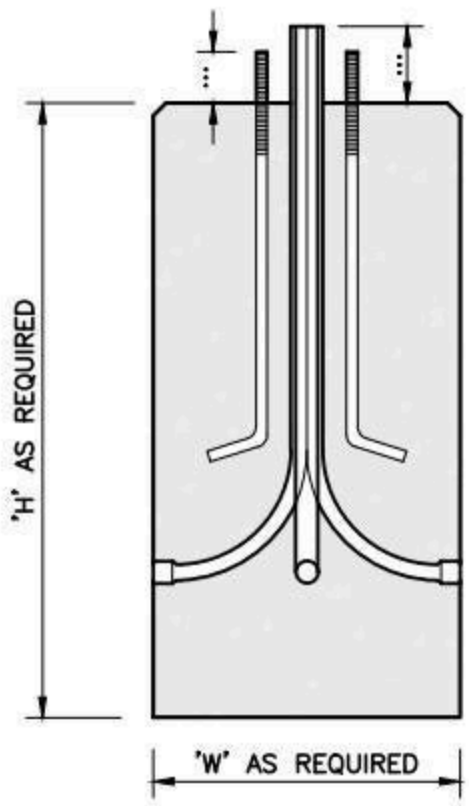

SECTION A–A

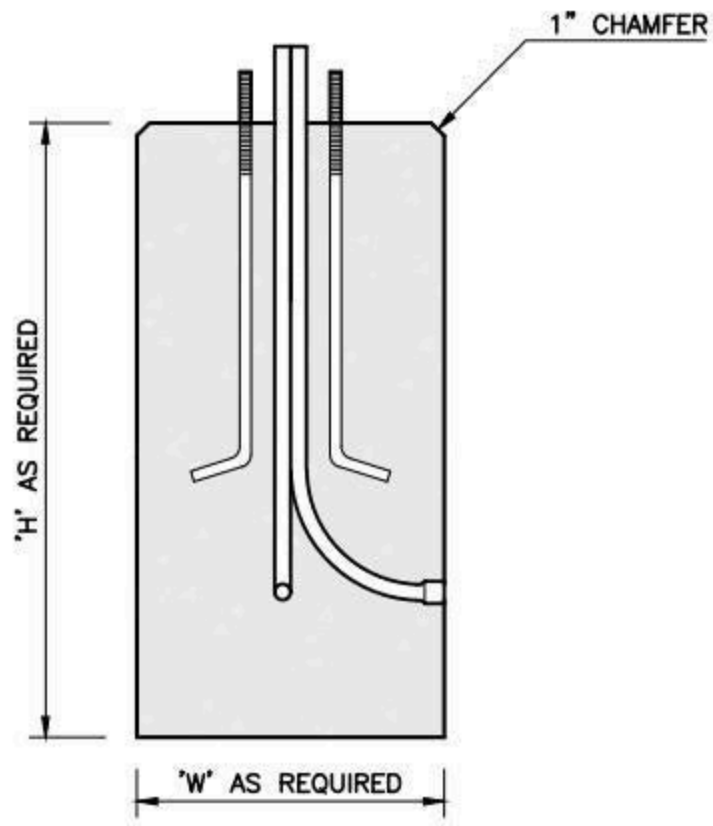

SECTION B–B

NOTES:

1. CONCRETE MINIMUM 5,000 PSI AFTER 28 DAYS.
2. CONDUIT, ANCHOR BOLTS AND TEMPLATE SUPPLIED BY OTHERS.
3. LIGHT POLE BASE SIZE IS TO BE SPECIFIED BY A QUALIFIED ENGINEER.
4. TYPICAL BASE LENGTHS AND WIDTHS 'W' INCLUDE: 17", 20", 18", 24".
5. TYPICAL BASE HEIGHTS 'H' RANGE FROM 4' TO 7'.
6. OTHER SIZES AVAILABLE UPON REQUEST.
7. * REPLACE 'W' AND 'H' WITH BASE WIDTH AND HEIGHT IN SHEA PRODUCT ID.

SHEA PRODUCT ID: LPB'W'SQX'H'*	FILE NAME: LPBSQXHEIGHT		
WEIGHT (LBS): VARIES	DRAWN BY: L.P.	DATE: 1/10/2018	PAGE: I.A.2

NPCA CERTIFIED PLANT

Specifications subject to change without notice

SHEA CONCRETE PRODUCTS
New England's Premier Precaster
800-696-7432 (SHEA)
www.sheaconcrete.com
MAILING ADDRESS: 87 HAVERHILL RD AMESBURY, MA 01913

HANDHOLE 12" X 12" X 20.5"

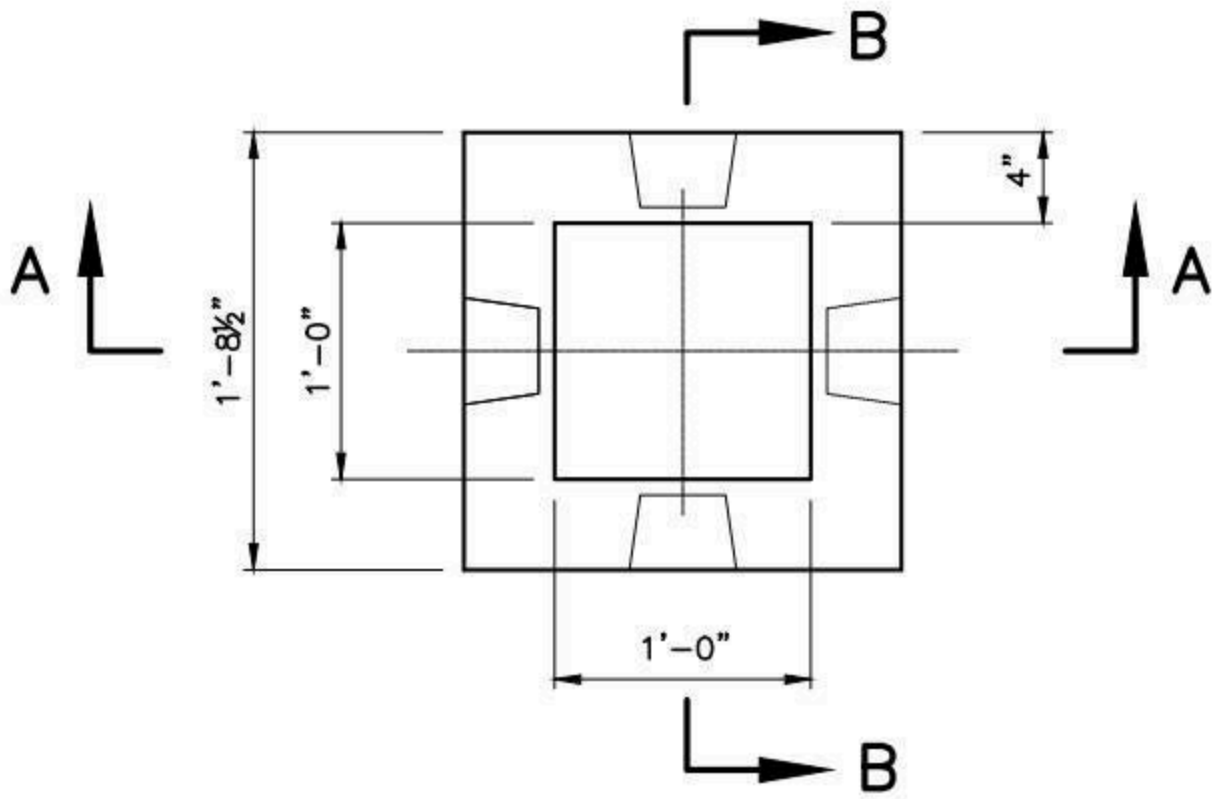

PLAN

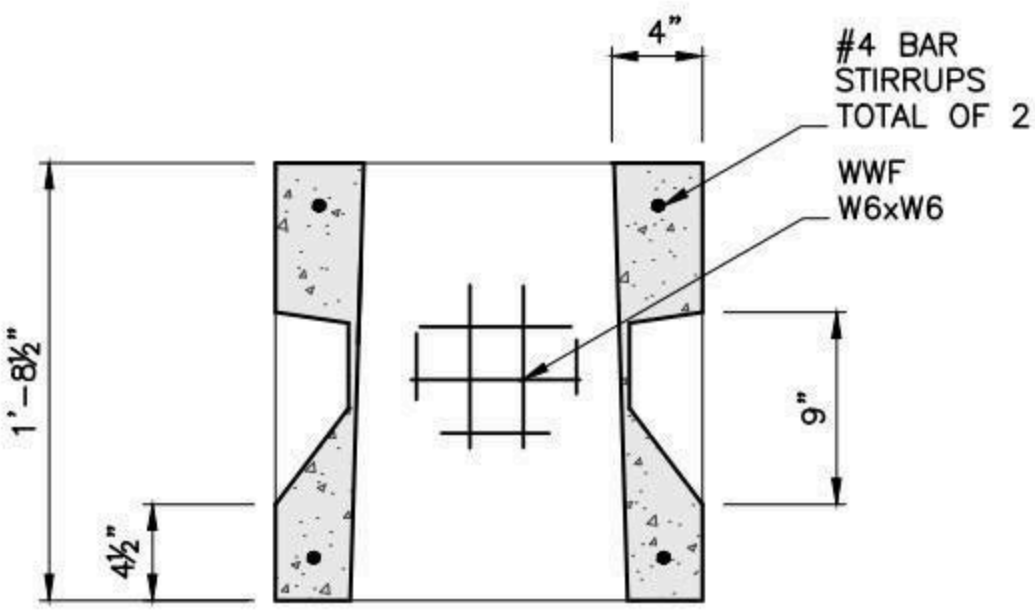

SECTION A-A

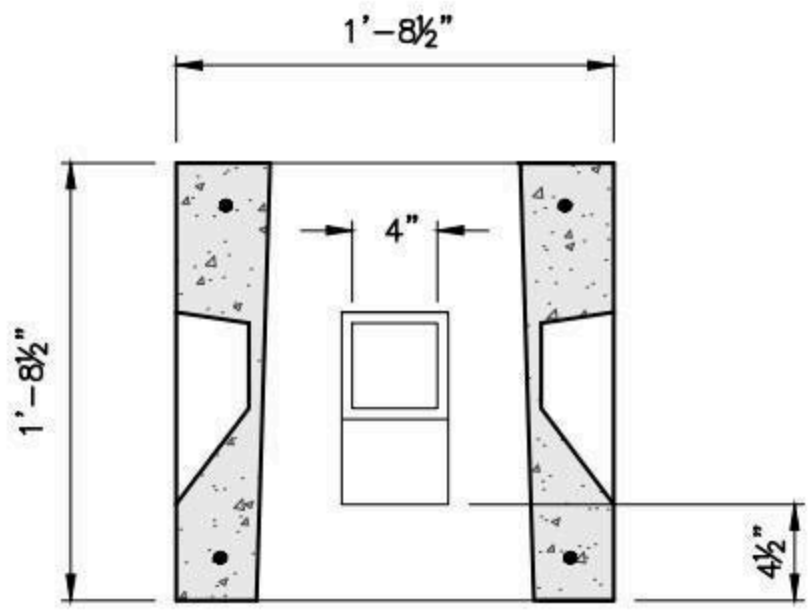

SECTION B-B

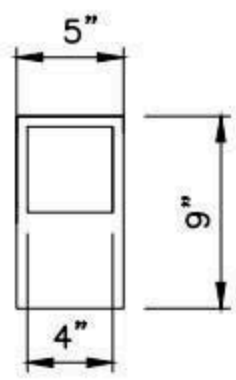

KNOCK OUT

NOTES:

1. CONCRETE: 5,000 PSI MINIMUM AFTER 28 DAYS.
2. DESIGN LOADING: AASHTO HS20-44, 0 TO 5 FEET COVER.

SHEA PRODUCT ID: HH-11	FILE NAME: HANDHOLE 12X12		
WEIGHT (LBS): 475	DRAWN BY: L.P.	DATE: 1/15/2018	PAGE: I.B.1

NPCA CERTIFIED PLANT

Specifications subject to change without notice

SHEA CONCRETE PRODUCTS
New England's Premier Precaster
800-696-7432 (SHEA)
www.sheaconcrete.com
MAILING ADDRESS: 87 HAVERHILL RD AMESBURY, MA 01913

HANDHOLE 12" X 24" X 33"

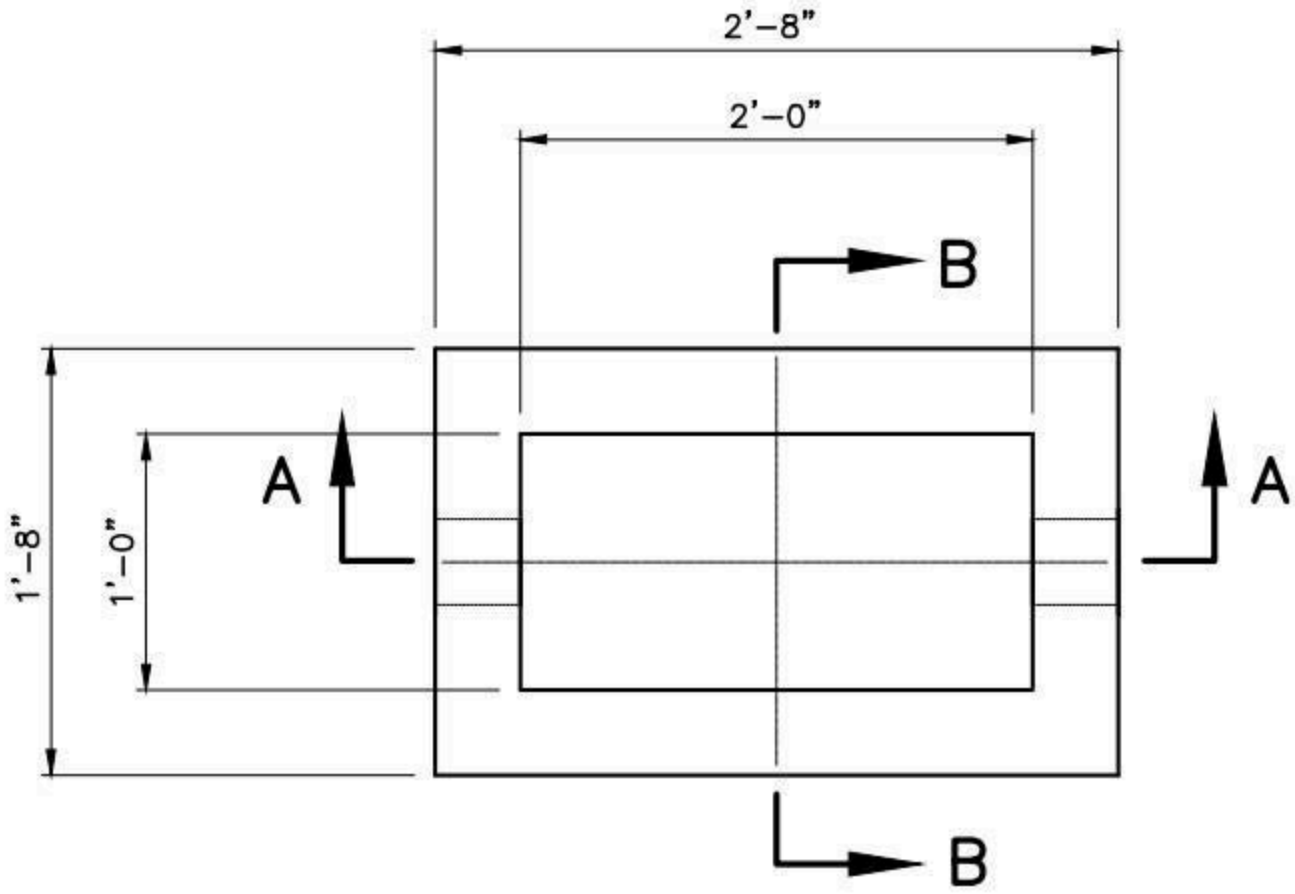

PLAN

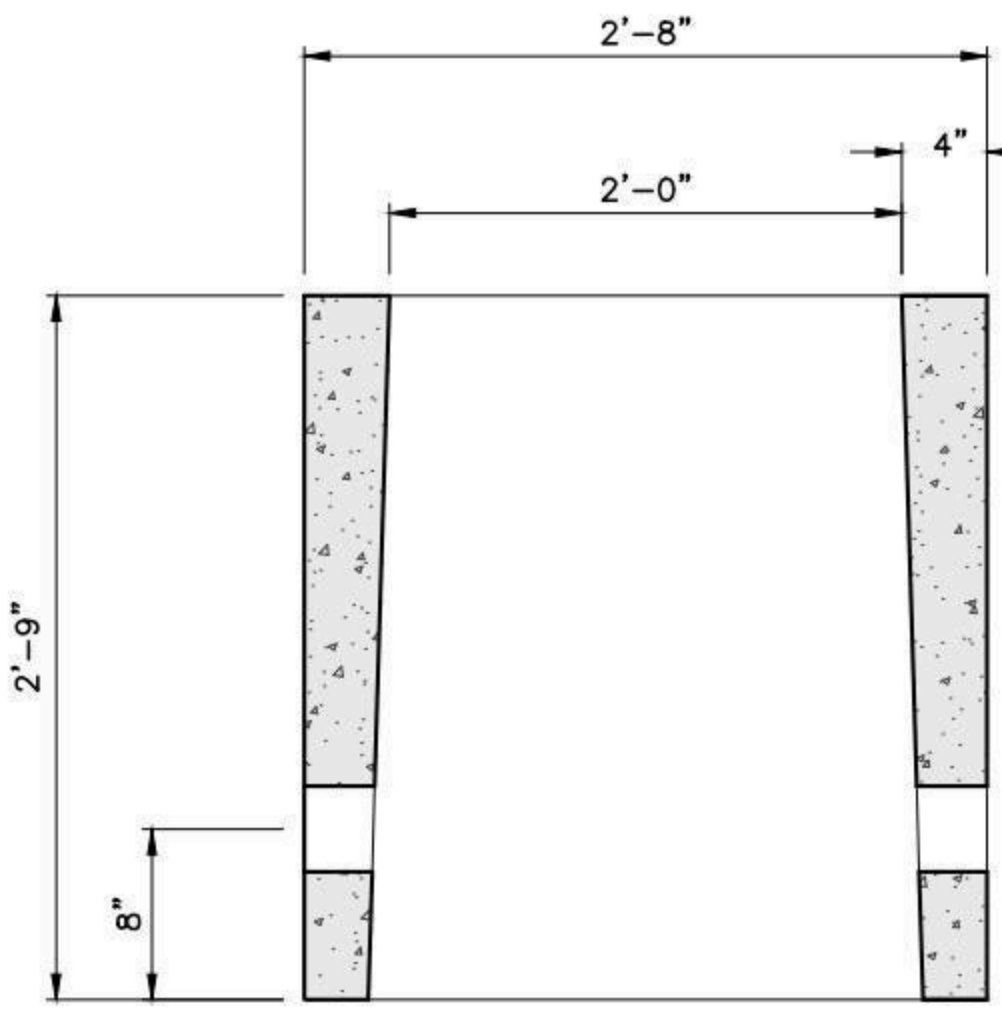

SECTION A-A

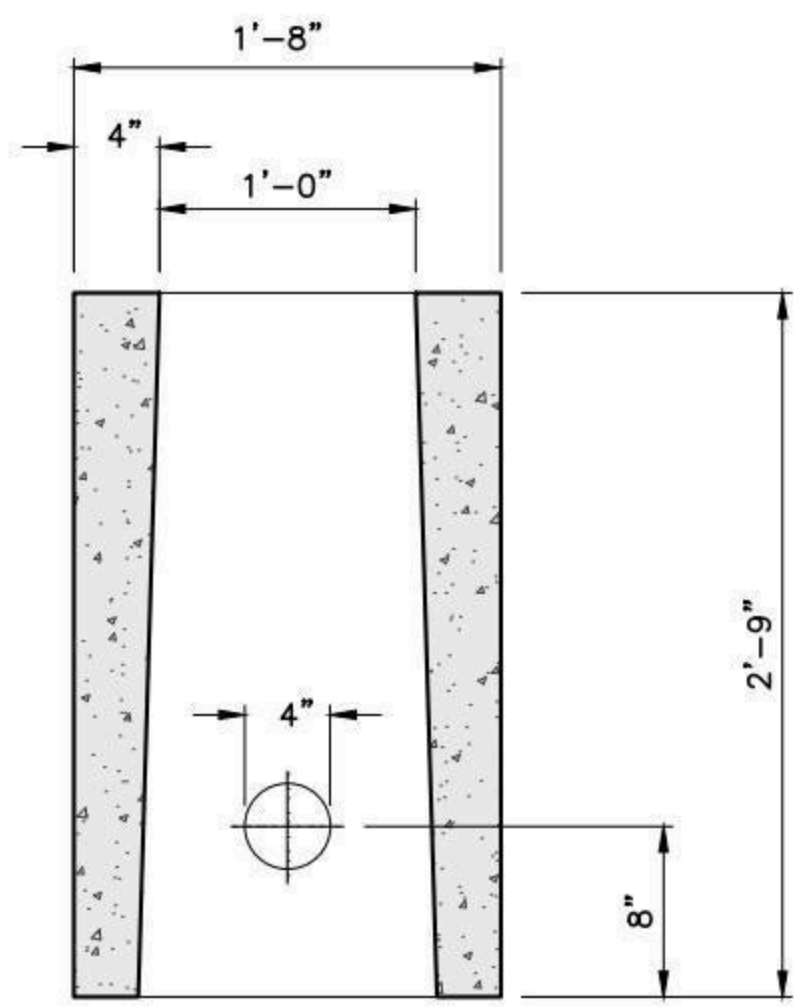

SECTION B-B

NOTES:

1. CONCRETE: 5,000 PSI MINIMUM AFTER 28 DAYS.
2. DESIGN LOADING: AASHTO HS20-44, 0 TO 5 FEET COVER.

SHEA PRODUCT ID: HH-12	FILE NAME: HANDHOLE 12X24			NPCA CERTIFIED PLANT
WEIGHT (LBS): 975	DRAWN BY: L.P.	DATE: 1/15/2018	PAGE: I.B.2	

Specifications subject to change without notice

SHEA CONCRETE PRODUCTS
New England's Premier Precaster
800-696-7432 (SHEA)
www.sheaconcrete.com
MAILING ADDRESS: 87 HAVERHILL RD AMESBURY, MA 01913

HANDHOLE 24" X 24" X 24"

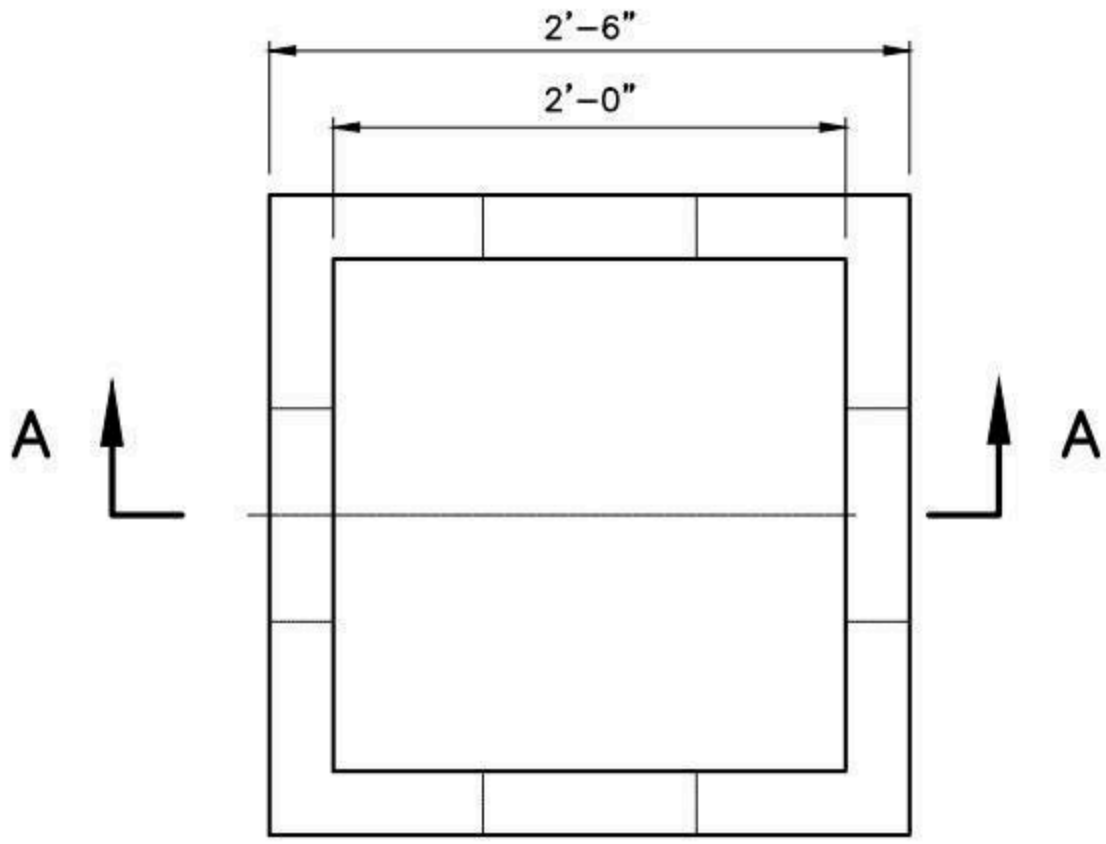

PLAN

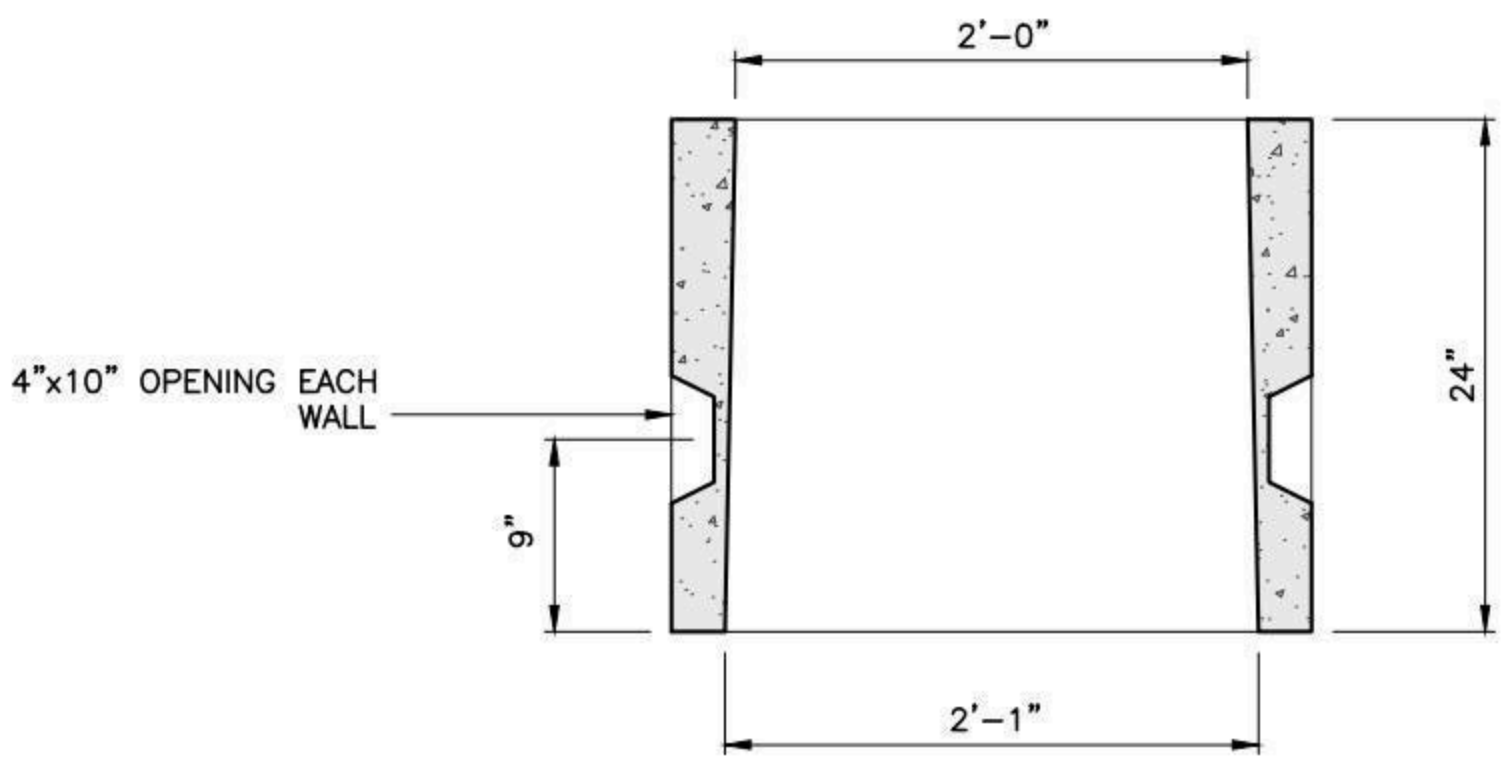

SECTION A-A

OPPOSITE/ADJACENT WALLS SIMILAR

NOTES:

1) CONCRETE: 5,000 PSI MINIMUM AFTER 28 DAYS.
2) DESIGN LOADING: AASHTO HS20-44, 0 TO 5 FEET COVER.
3) REINFORCEMENT: 6X6, 6/6 WWF. REBAR #4-12" OCEW.

SHEA PRODUCT ID: HH-22-24	FILE NAME: HANDHOLE 24X24		
WEIGHT (LBS): 650	DRAWN BY: L.P.	DATE: 1/15/2018	PAGE: I.B.3

NPCA CERTIFIED PLANT

Specifications subject to change without notice

SHEA CONCRETE PRODUCTS
New England's Premier Precaster
800-696-7432 (SHEA)
www.sheaconcrete.com
MAILING ADDRESS: 87 HAVERHILL RD AMESBURY, MA 01913

HANDHOLE 36" X 36" H-10

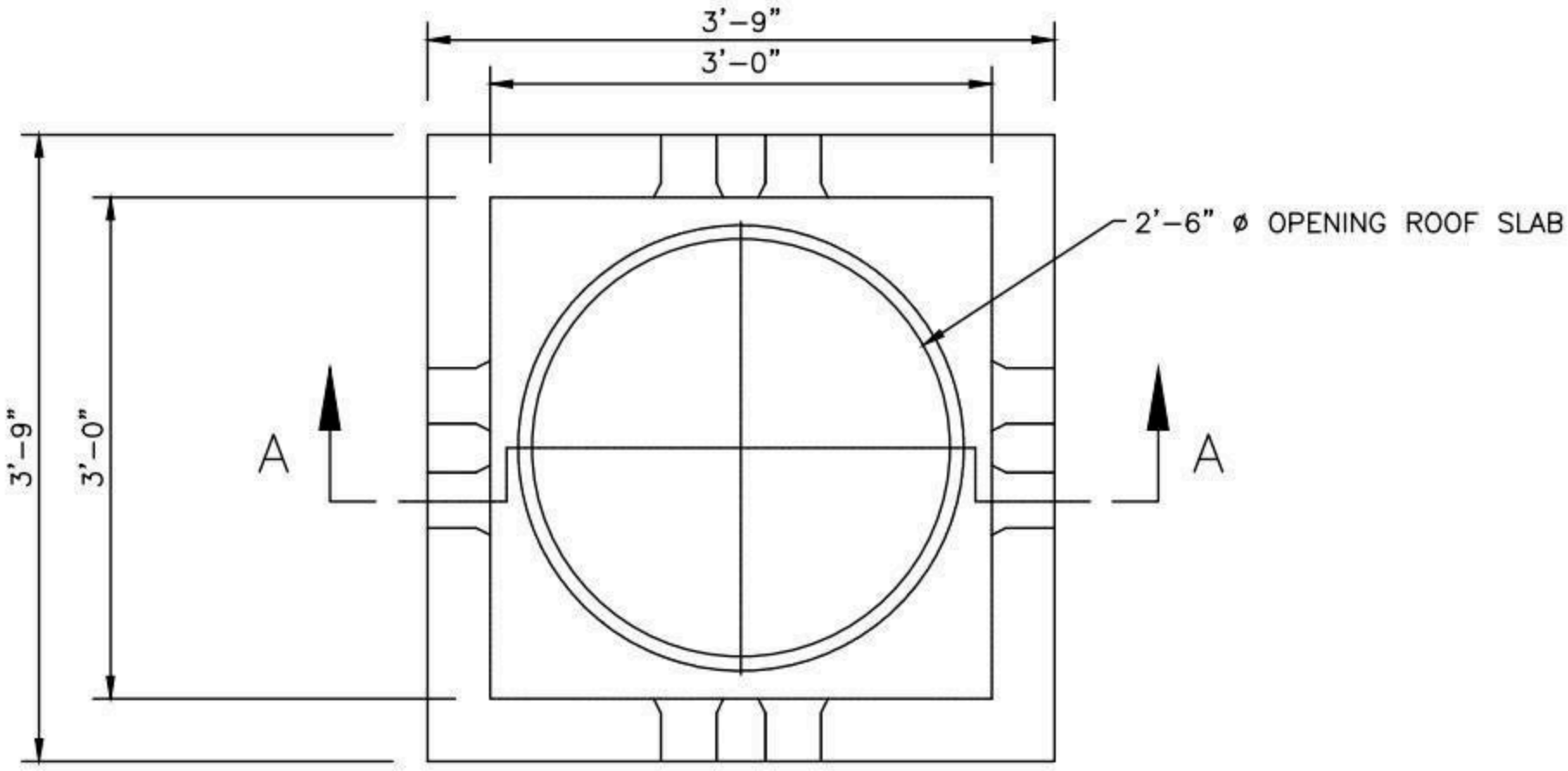

PLAN

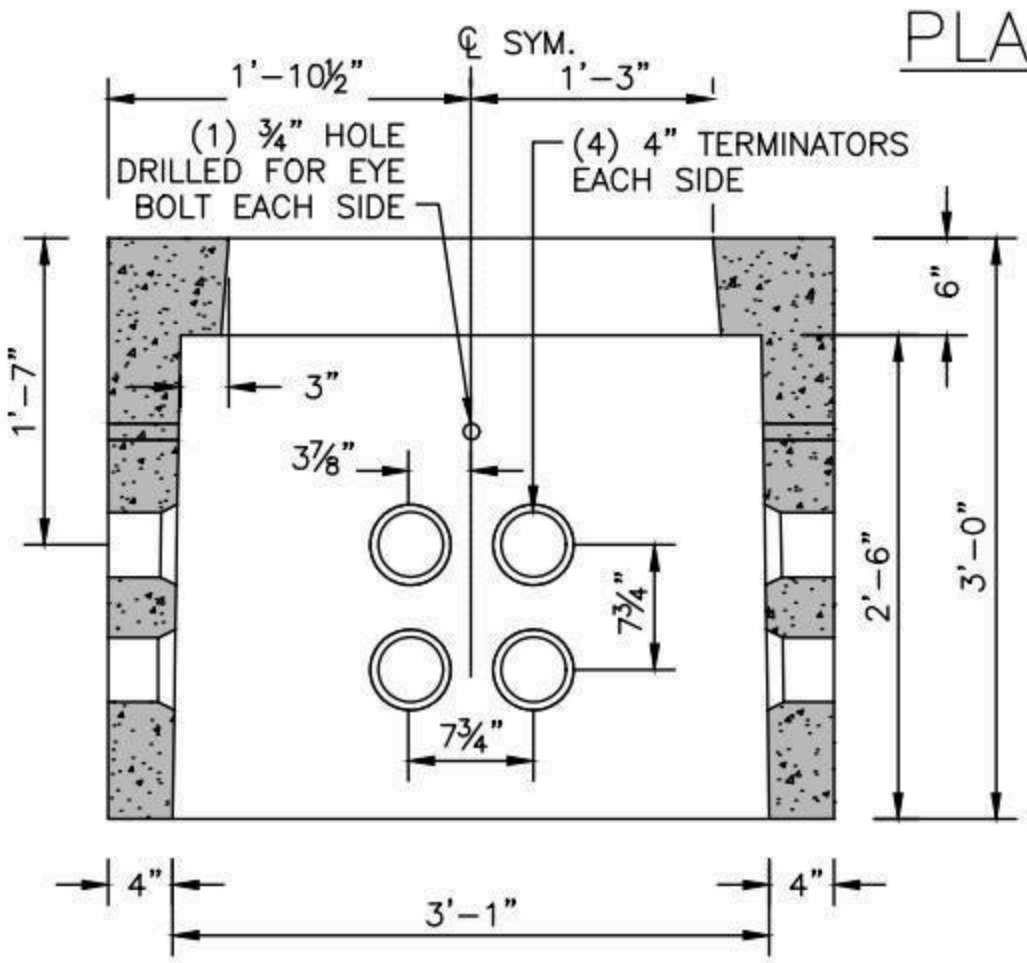

SECTION A-A

36" HIGH STRUCTURE

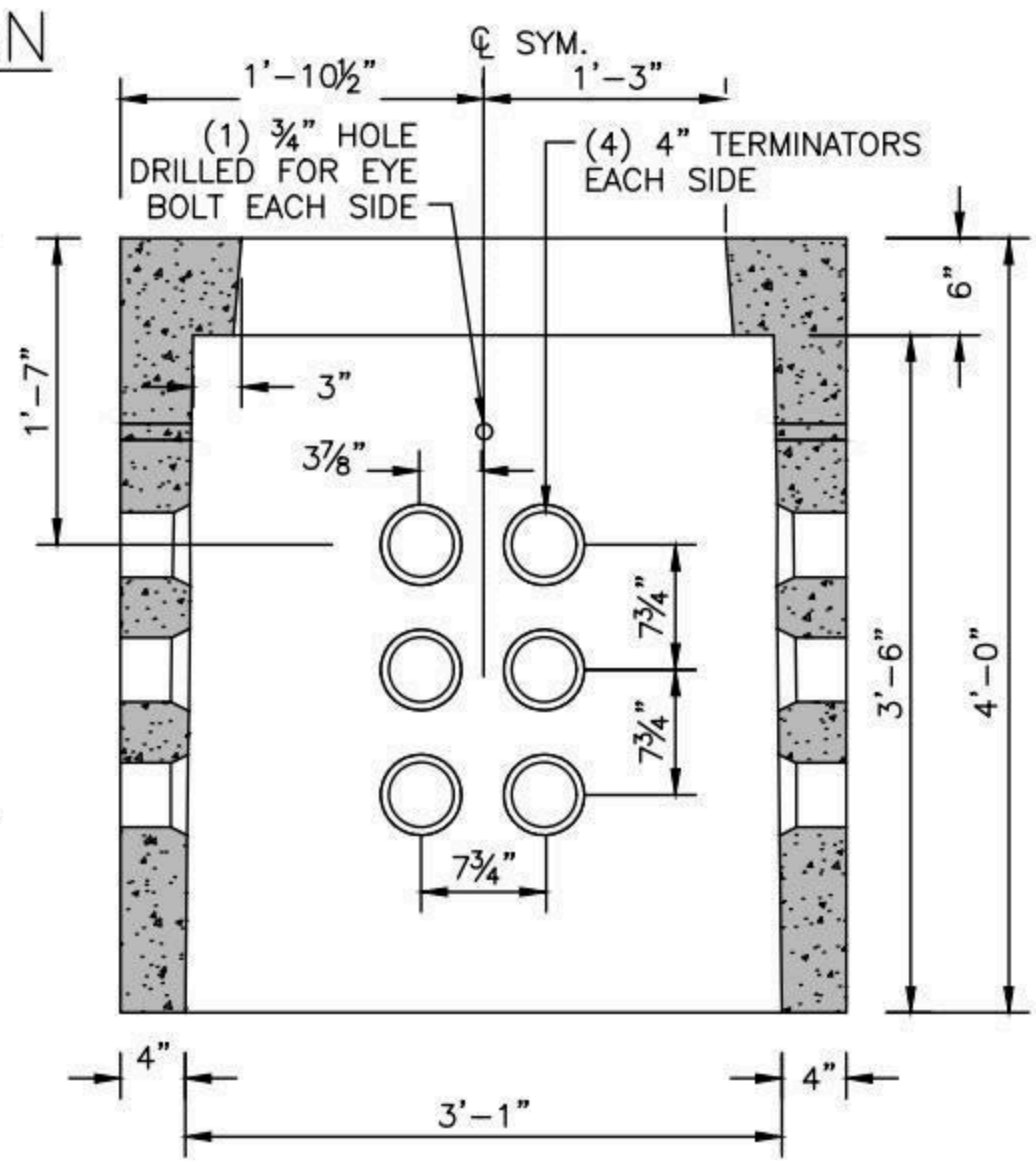

SECTION A-A

48" HIGH STRUCTURE

NOTES:

1. CONCRETE: 5,000 PSI MINIMUM AFTER 28 DAYS.
2. DESIGN LOADING: HS10.
3. STEEL REINFORCEMENT CONFORMS TO ASTM A615, GRADE 60.
4. MINIMUM STEEL COVER 1".
5. OPTIONAL OPENINGS AVAILABLE BY SPECIAL ORDER.
6. FORMERLY KNOWN AS: NE-15.

SHEA PRODUCT ID: HH-33X33X32	FILE NAME: HANDHOLE 36X36 H-10		
WEIGHT (LBS): 2230	DRAWN BY: L.P.	DATE: 12/03/2018	PAGE: I.B.4

NPCA CERTIFIED PLANT

773 Salem Street-Wilmington, MA | 153 Cranberry Hwy-Rochester, MA | 87 Haverhill Road-Amesbury, MA | 160 Old Turnpike Rd-Nottingham, NH

Specifications subject to change without notice

SHEA CONCRETE PRODUCTS
New England's Premier Precaster
800-696-7432 (SHEA)
www.sheaconcrete.com
MAILING ADDRESS: 87 HAVERHILL RD AMESBURY, MA 01913

HANDHOLE 36" X 36" H-20

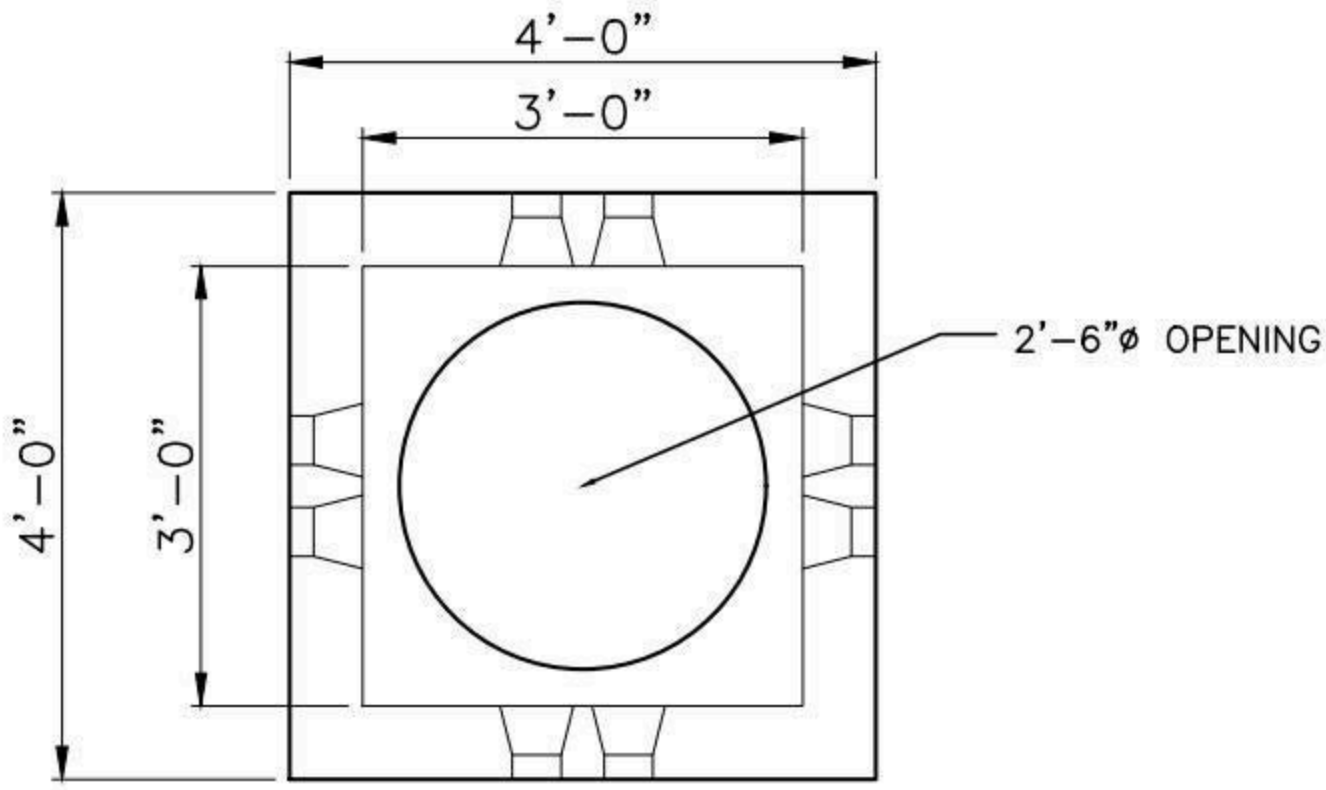

PLAN VIEW

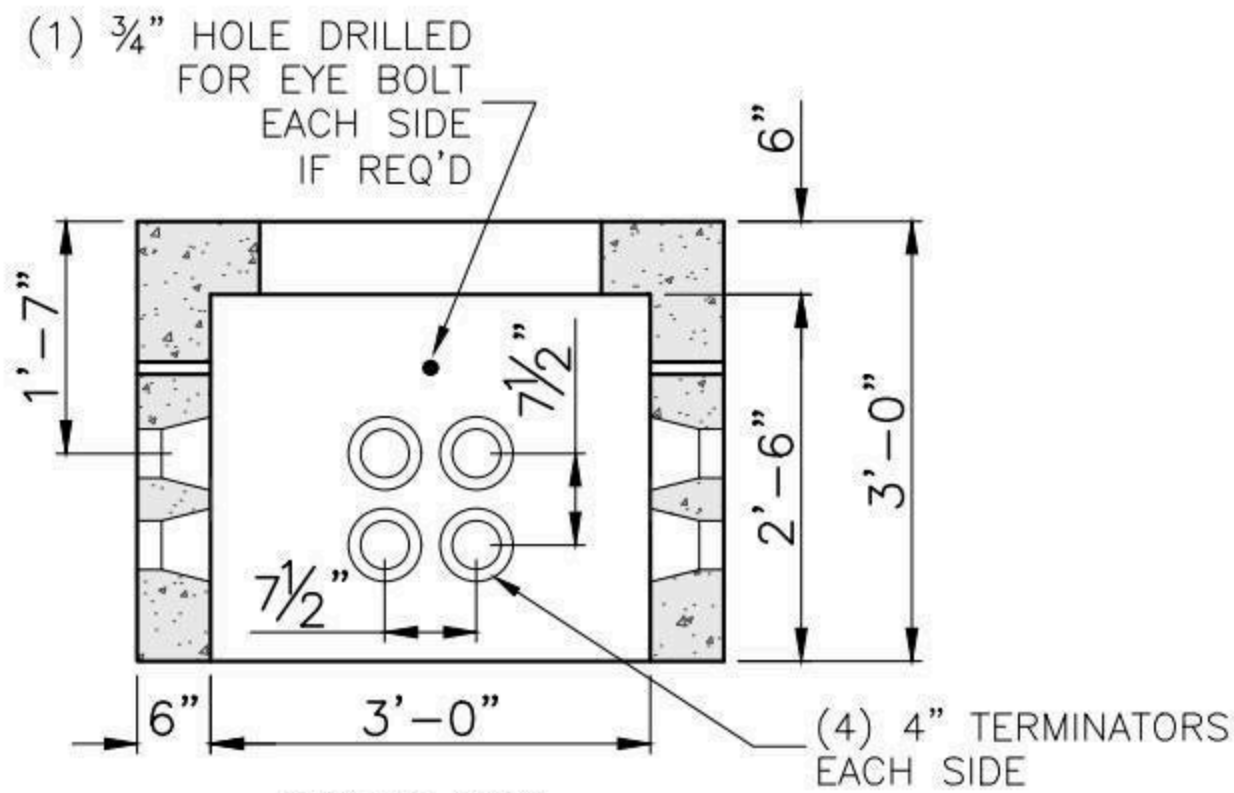

SECTION VIEW

OPEN BOTTOM

NOTES:

1. CONCRETE: 5,000 PSI MINIMUM AFTER 28 DAYS.
2. DESIGN LOADING: AASHTO HS20-44, 0 TO 5 FEET COVER.
3. STEEL REINFORCEMENT CONFORMS TO ASTM A615, GRADE 60.
4. MINIMUM STEEL COVER 1".
5. OPTIONAL OPENINGS AVAILABLE BY SPECIAL ORDER.

SHEA PRODUCT ID: HH-333H	FILE NAME: HANDHOLE 36X36 H-20			NPCA CERTIFIED PLANT
WEIGHT (LBS): 3340	DRAWN BY: L.P.	DATE: 1/16/2018	PAGE: I.B.5	

Specifications subject to change without notice

SHEA CONCRETE PRODUCTS
New England's Premier Precaster
800-696-7432 (SHEA)
www.sheaconcrete.com
MAILING ADDRESS: 87 HAVERHILL RD AMESBURY, MA 01913

HANDHOLE 4' X 4' X 4'

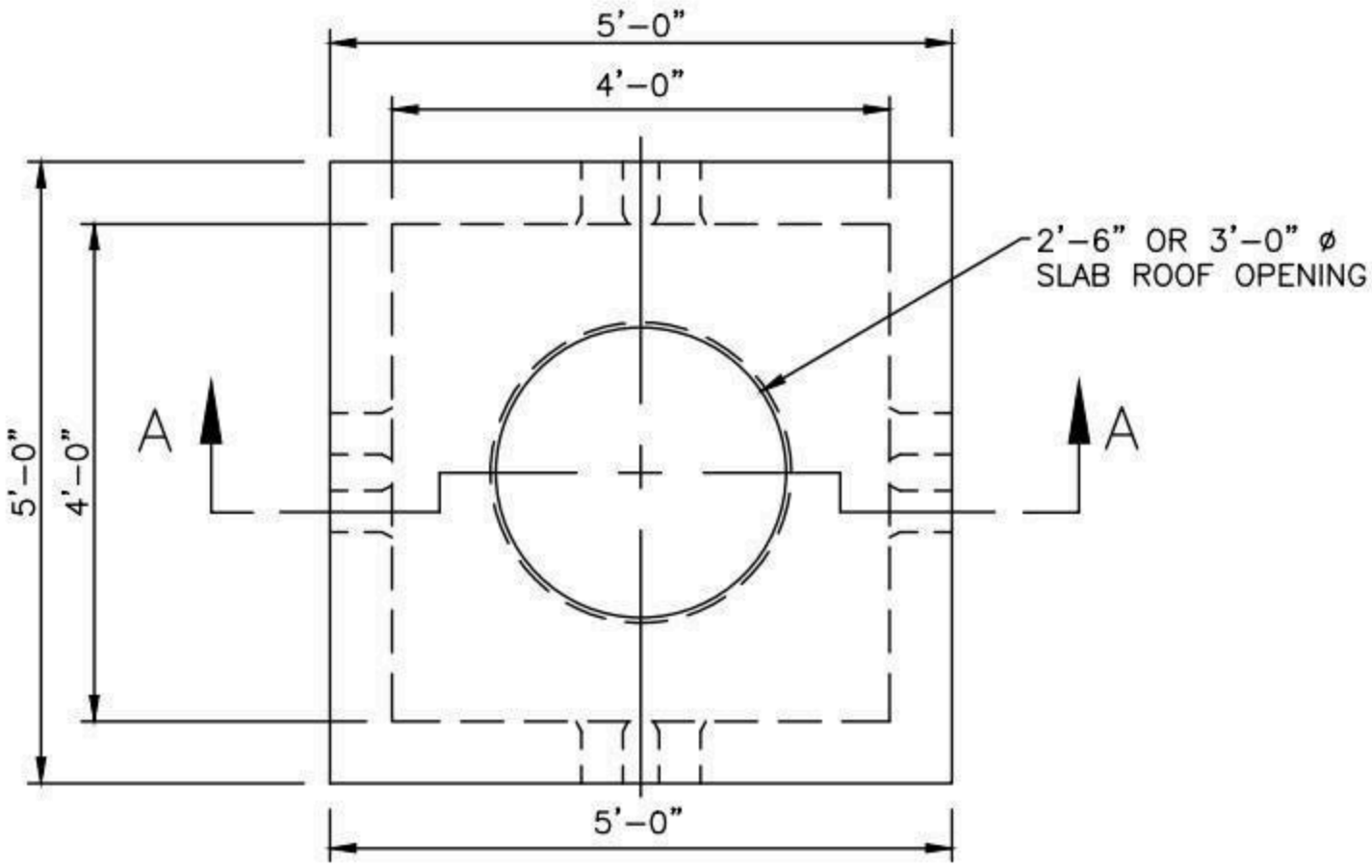

PLAN

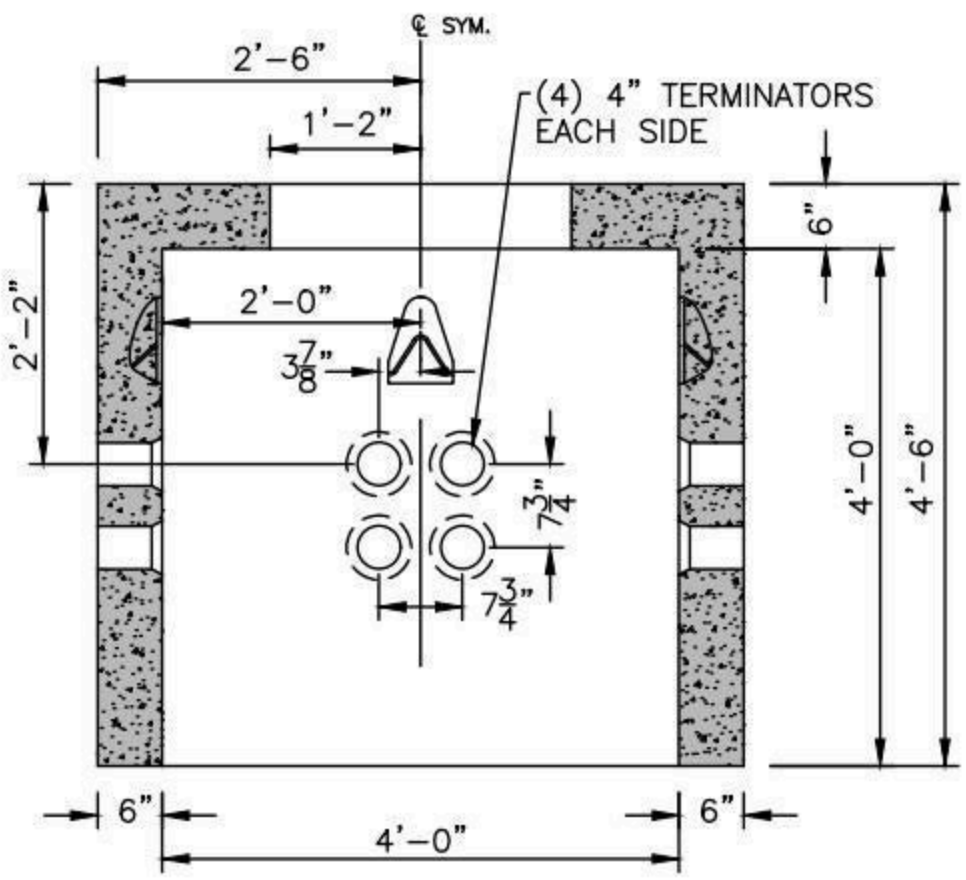

SECTION A-A

OPEN BOTTOM

NOTES:

1. CONCRETE: 5,000 PSI MINIMUM AFTER 28 DAYS.
2. DESIGN LOADING: AASHTO HS-20-44, 0 TO 5 FEET COVER.
3. STEEL REINFORCEMENT CONFORMS TO ASTM A615, GRADE 60.
4. MINIMUM STEEL COVER 1".
5. OPTIONAL OPENINGS AVAILABLE BY SPECIAL ORDER.

SHEA PRODUCT ID: HH-444	FILE NAME: HANDHOLE 48X48			NPCA CERTIFIED PLANT
WEIGHT (LBS): 6675	DRAWN BY: L.P.	DATE: 11/13/2018	PAGE: I.B.6	

Specifications subject to change without notice

SHEA CONCRETE PRODUCTS
New England's Premier Precaster
800-696-7432 (SHEA)
www.sheaconcrete.com
MAILING ADDRESS: 87 HAVERHILL RD AMESBURY, MA 01913

PULLBOX 5' X 5' X 5'

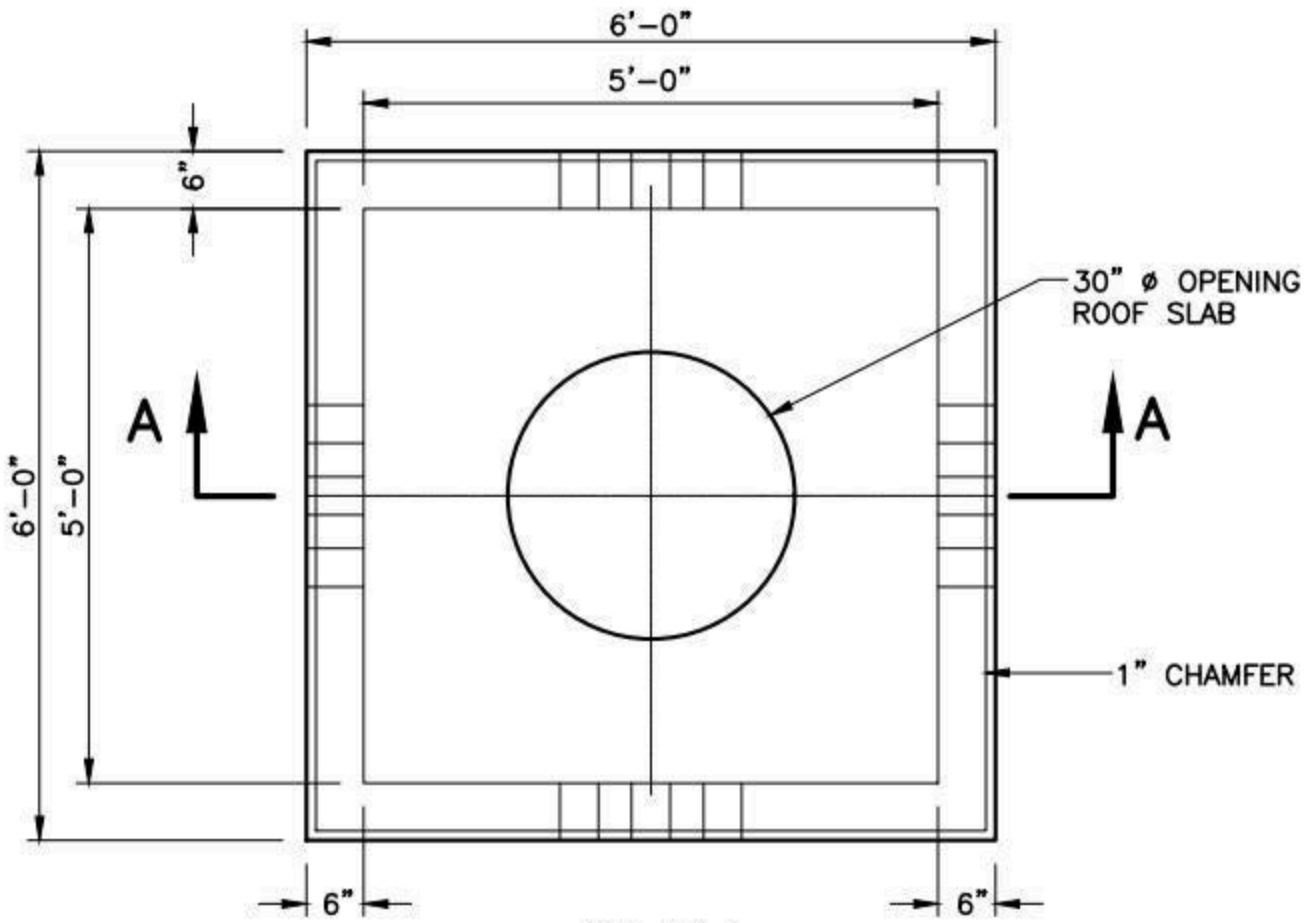

PLAN

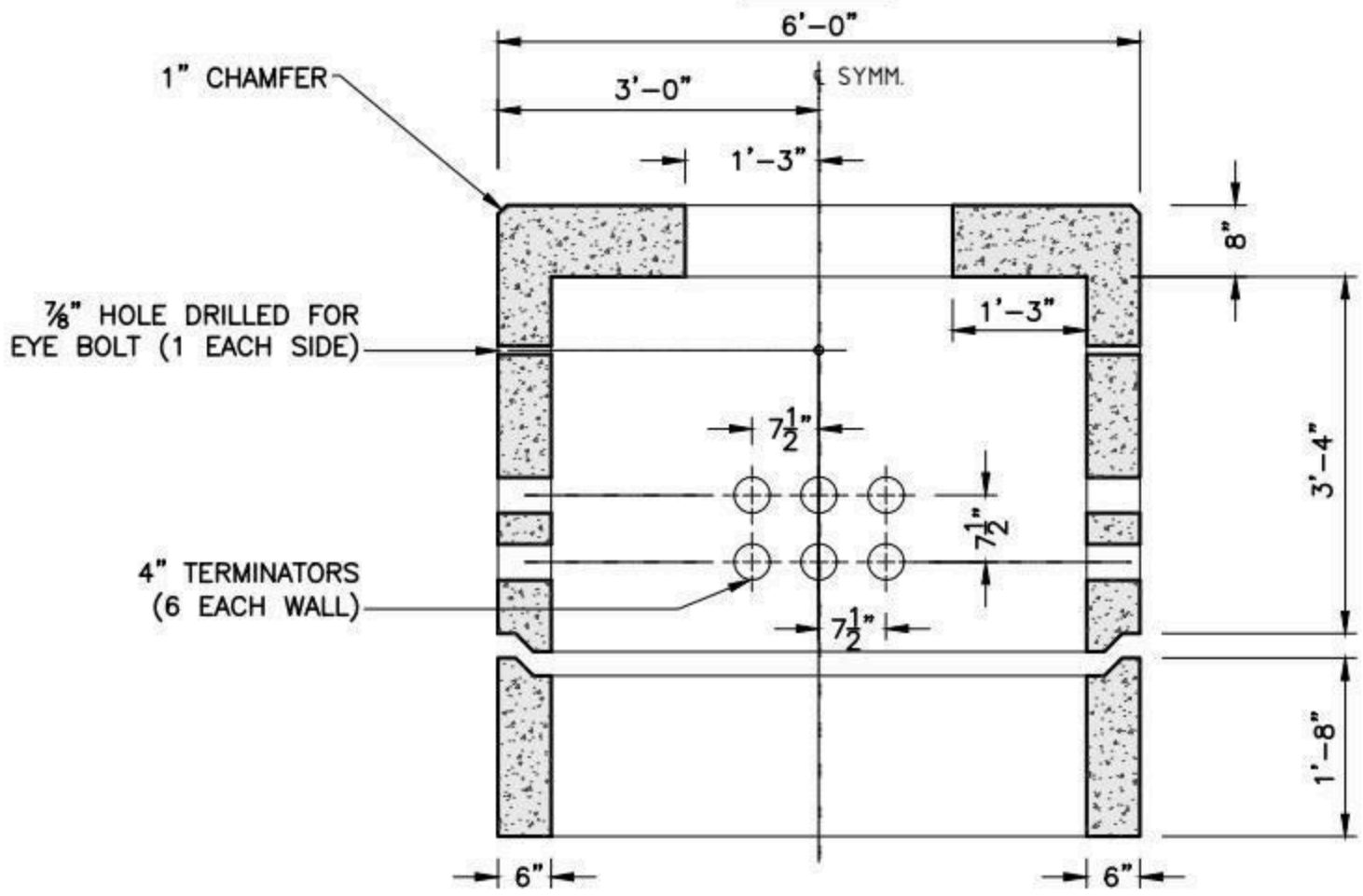

SECTION A-A

NOTES:

1. CONCRETE: 5,000 PSI MINIMUM AFTER 28 DAYS.
2. DESIGN LOADING: AASHTO HS20-44, 0 TO 5 FEET COVER.
3. STEEL REINFORCEMENT CONFORMS TO ASTM A615, GRADE 60.
4. MINIMUM STEEL COVER 1".

SHEA PRODUCT ID: PB-555	FILE NAME: PULLBOX 5X5X5			NPCA CERTIFIED PLANT
WEIGHT (LBS): 10980	DRAWN BY: L.P.	DATE: 2/5/2018	PAGE: I.B.7	

Specifications subject to change without notice

SHEA CONCRETE PRODUCTS
New England's Premier Precaster
800-696-7432 (SHEA)
www.sheaconcrete.com
MAILING ADDRESS: 87 HAVERHILL RD AMESBURY, MA 01913

MANHOLE 3' X 3' X 2'-6"

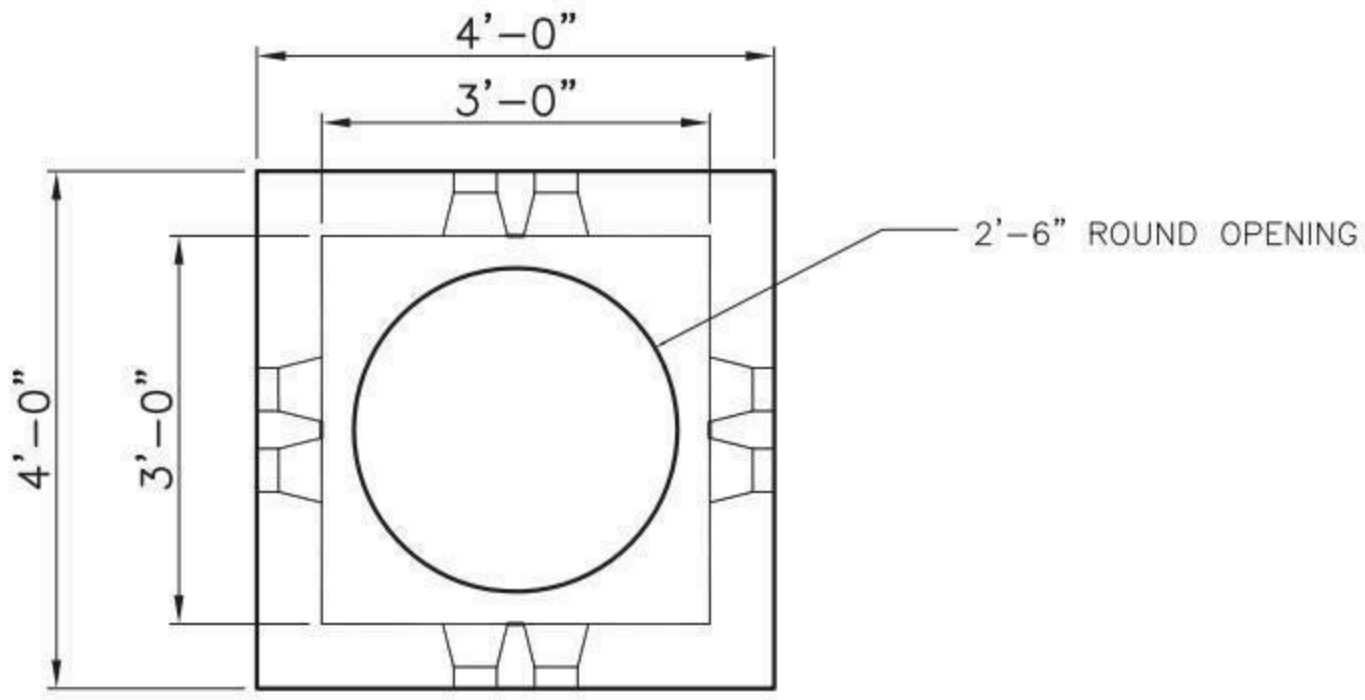

PLAN VIEW

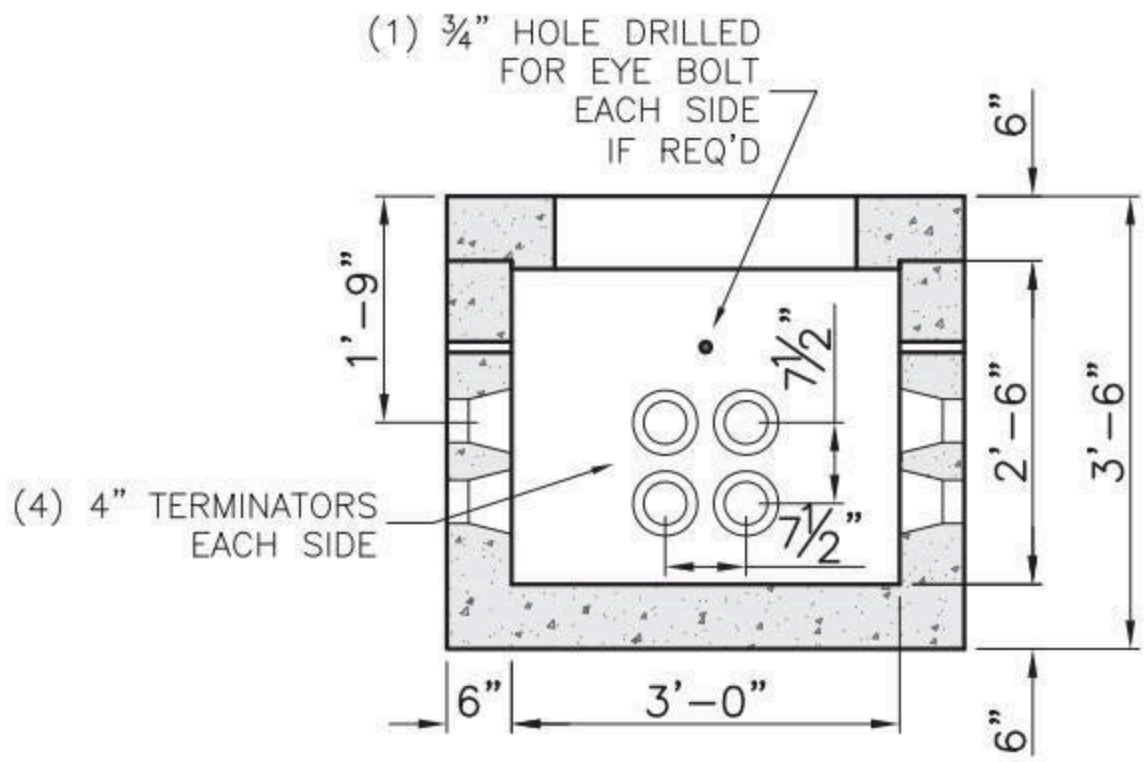

SECTION VIEW
WITH FLOOR

NOTES:

1. CONCRETE: 5,000 PSI MINIMUM AFTER 28 DAYS.
2. DESIGN LOADING: AASHTO HS20-44, 0 TO 5 FEET COVER.
3. STEEL REINFORCEMENT CONFORMS TO ASTM A615, GRADE 60.
4. MINIMUM STEEL COVER 1".
5. OPTIONAL OPENINGS AVAILABLE BY SPECIAL ORDER.

SHEA PRODUCT ID: MH-333	FILE NAME: MH 3X3X2-6			NPCA CERTIFIED PLANT
WEIGHT (LBS): 4500	DRAWN BY: L.P.	DATE: 2/5/2018	PAGE: I.C.1	

Specifications subject to change without notice

SHEA CONCRETE PRODUCTS
New England's Premier Precaster
800-696-7432 (SHEA)
www.sheaconcrete.com
MAILING ADDRESS: 87 HAVERHILL RD AMESBURY, MA 01913

MANHOLE 4' X 4' X 4'

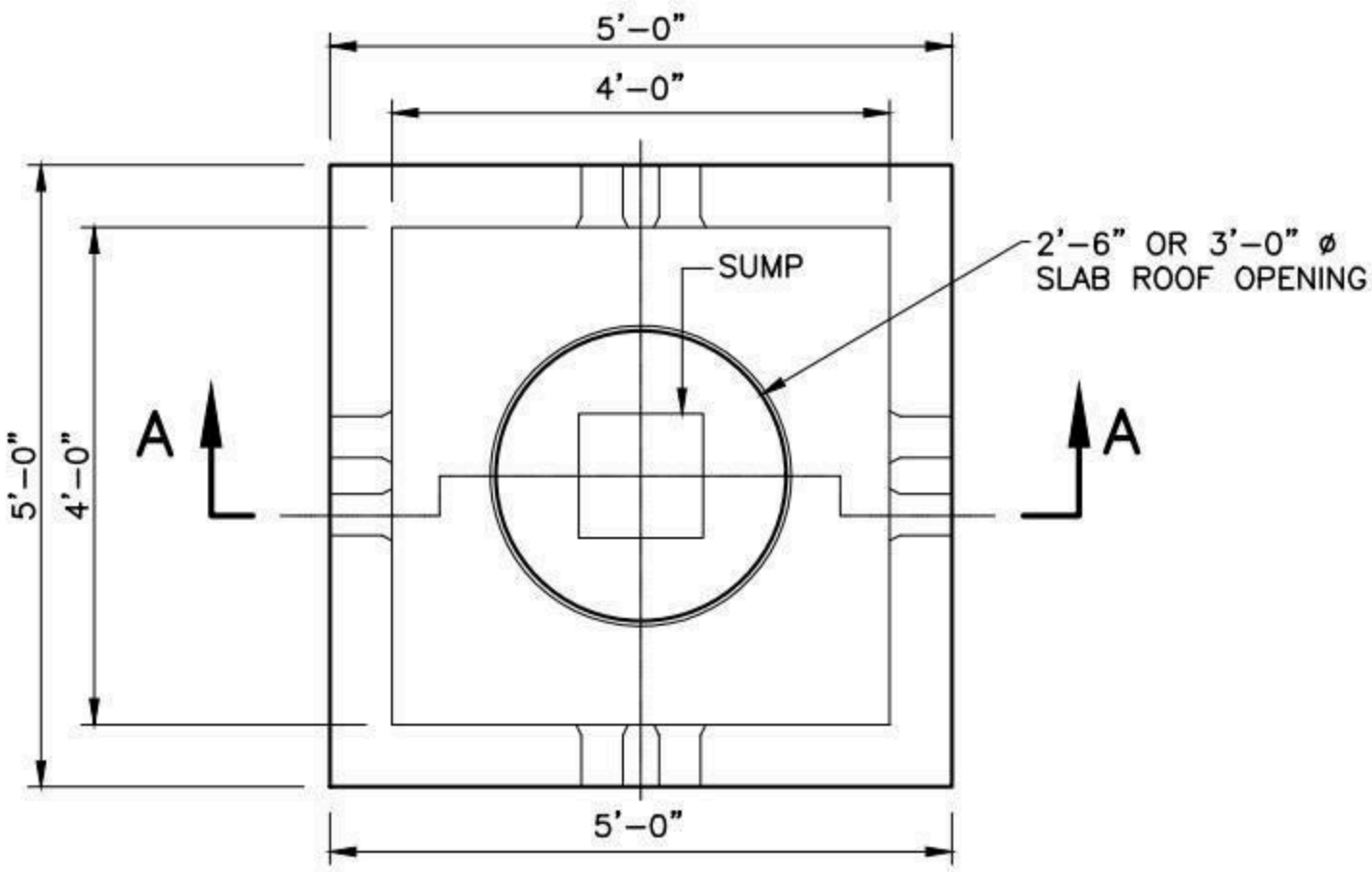

PLAN

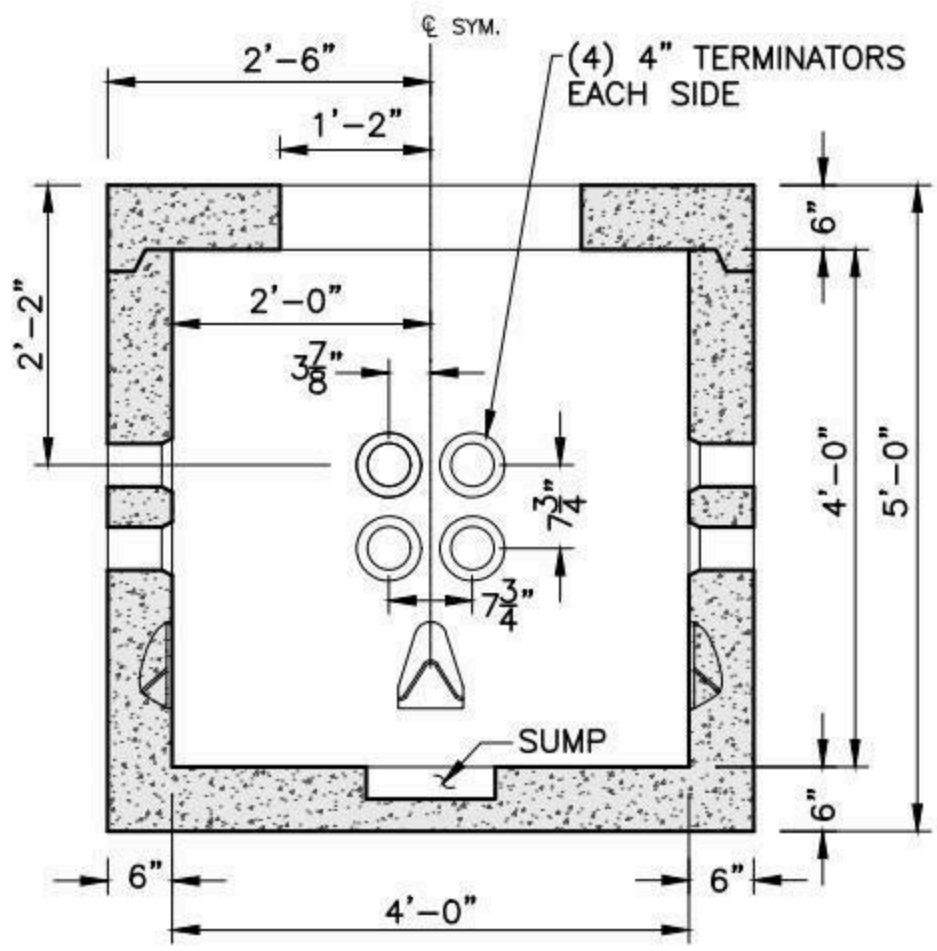

SECTION A-A

CLOSED BOTTOM

NOTES:

1. CONCRETE: 5,000 PSI MINIMUM AFTER 28 DAYS.
2. DESIGN LOADING: AASHTO HS20-44, 0 TO 5 FEET COVER.
3. STEEL REINFORCEMENT CONFORMS TO ASTM A615, GRADE 60.
4. MINIMUM STEEL COVER 1".
5. OPTIONAL OPENINGS AVAILABLE BY SPECIAL ORDER.

SHEA PRODUCT ID: MH-444	FILE NAME: MH 4X4X4			NPCA CERTIFIED PLANT
WEIGHT (LBS): 8845	DRAWN BY: L.P.	DATE: 2/5/2018	PAGE: I.C.2	

Specifications subject to change without notice

SHEA CONCRETE PRODUCTS
New England's Premier Precaster
800-696-7432 (SHEA)
www.sheaconcrete.com
MAILING ADDRESS: 87 HAVERHILL RD AMESBURY, MA 01913

MANHOLE 4' X 6' X 6'

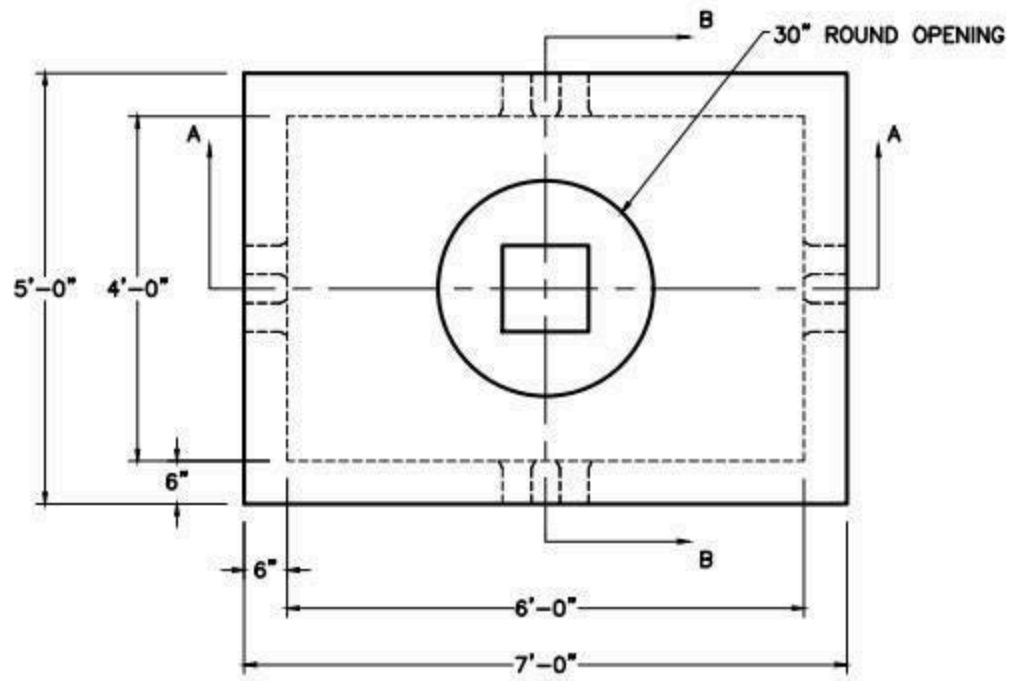

PLAN

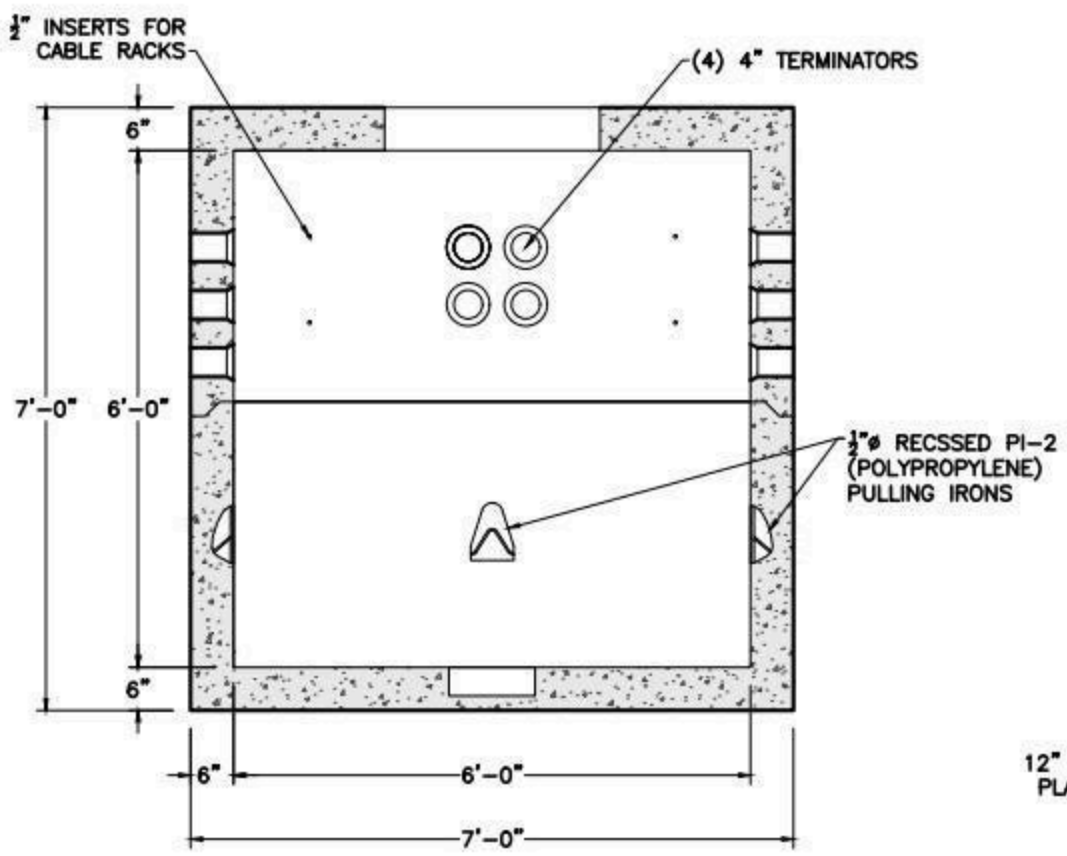

SECTION A-A
OPPOSITE SIDE SIMILAR

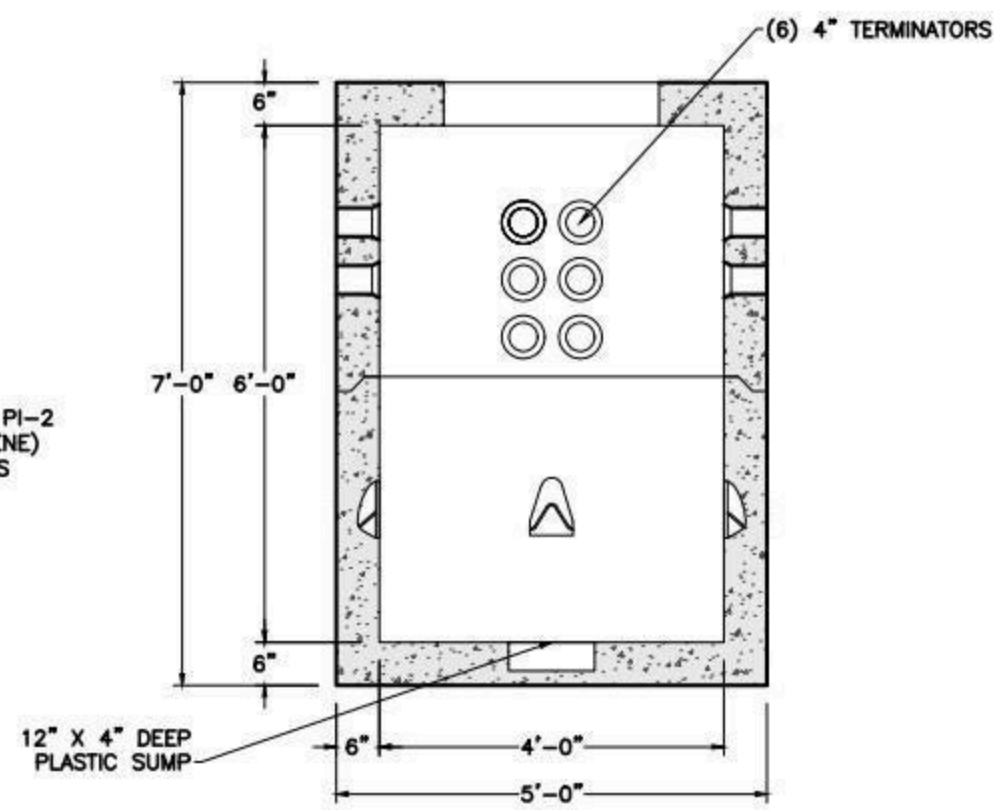

SECTION B-B
OPPOSITE SIDE SIMILAR

NOTES:

1. CONCRETE: 5,000 PSI MINIMUM AFTER 28 DAYS.
2. DESIGN LOADING: AASHTO HS20-44, 0 TO 5 FEET COVER.
3. STEEL REINFORCEMENT CONFORMS TO ASTM A615, GRADE 60.
4. MINIMUM STEEL COVER 1".

SHEA PRODUCT ID: MH-466	FILE NAME: MH 4X6X6		
WEIGHT (LBS): 14290	DRAWN BY: L.P.	DATE: 2/5/2018	PAGE: I.C.3

NPCA CERTIFIED PLANT

Specifications subject to change without notice

SHEA CONCRETE PRODUCTS
New England's Premier Precaster
800-696-7432 (SHEA)
www.sheaconcrete.com
MAILING ADDRESS: 87 HAVERHILL RD AMESBURY, MA 01913

MANHOLE 4' X 6' X 7'

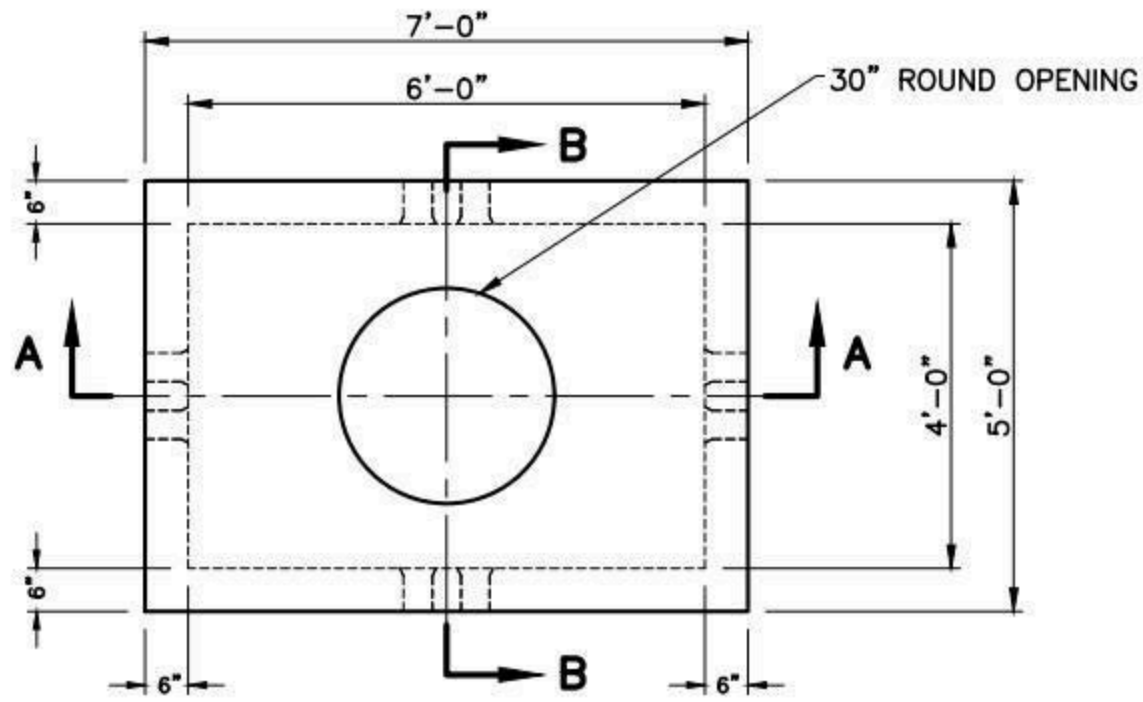

PLAN

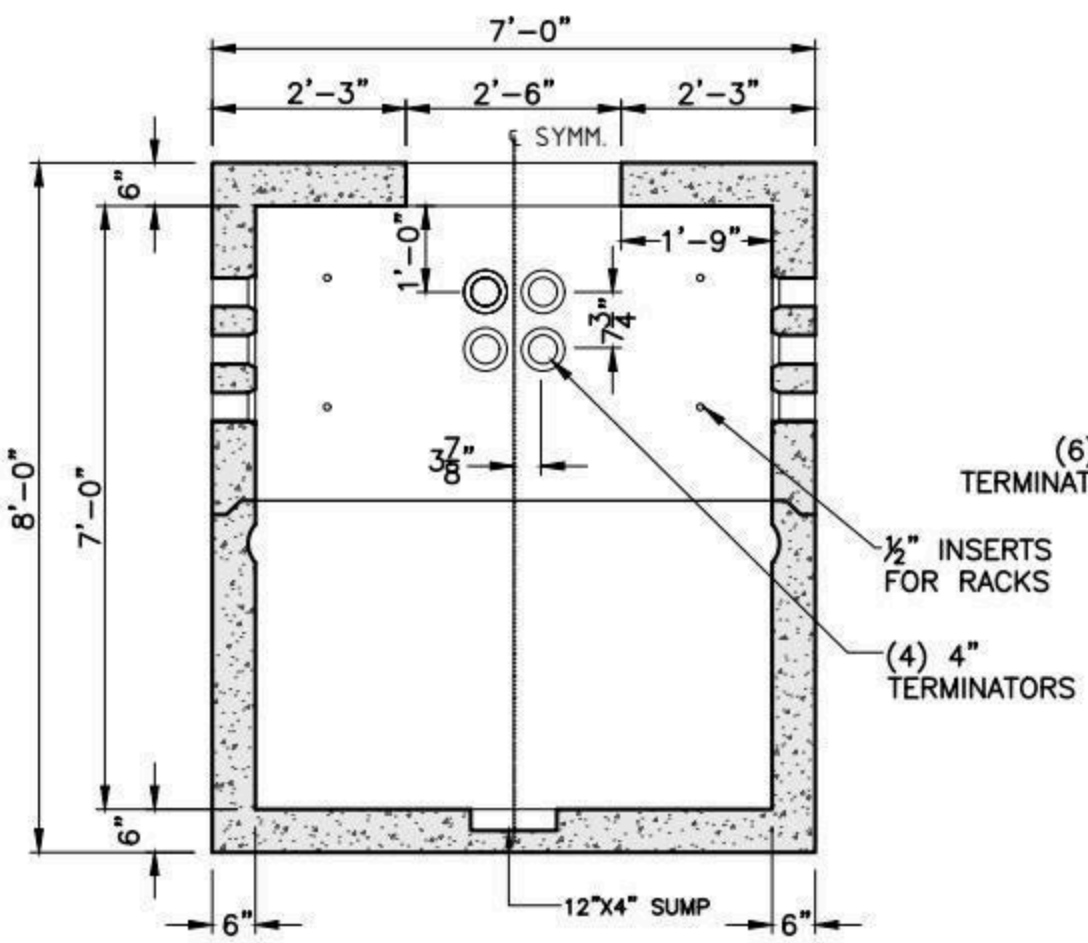

SECTION A-A

OPPOSITE WALL SIMILAR

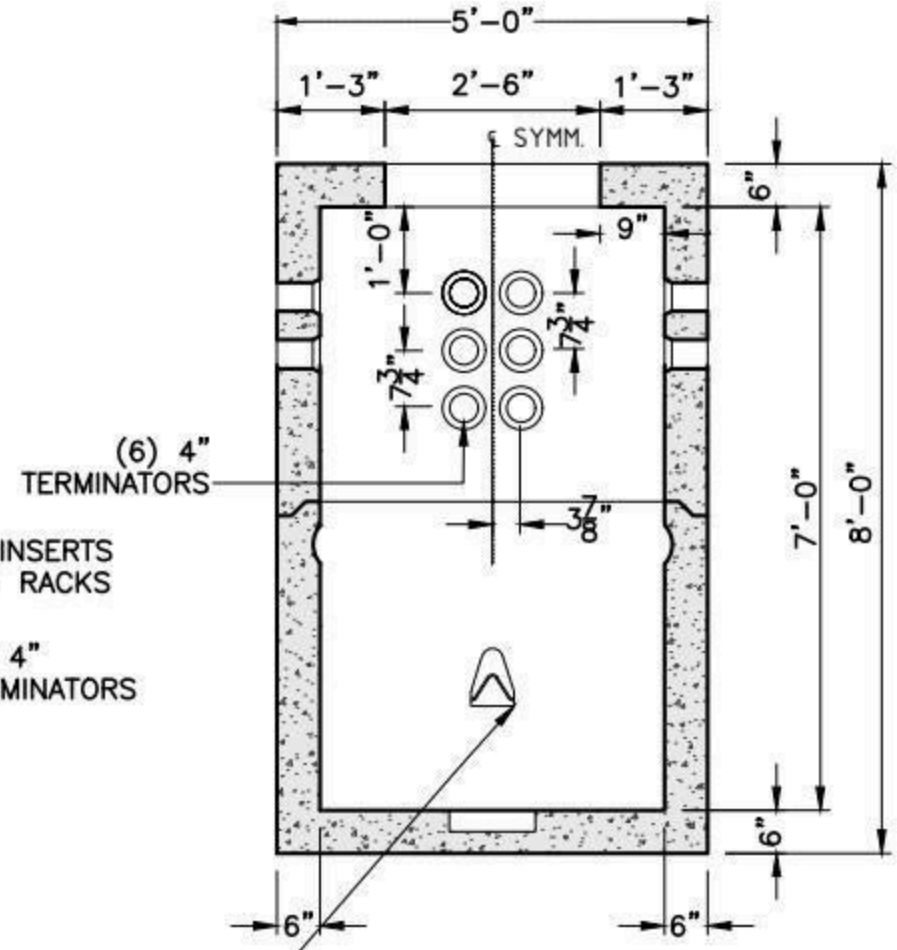

½"ø RECESSED NEW PI-2 (POLYPROPYLENE) PULLING IRONS

SECTION B-B

OPPOSITE WALL SIMILAR

NOTES:
1. CONCRETE: 5,000 PSI MINIMUM AFTER 28 DAYS.
2. DESIGN LOADING: AASHTO HS20-44, 0 TO 5 FEET COVER.
3. STEEL REINFORCEMENT CONFORMS TO ASTM A615, GRADE 60.
4. MINIMUM STEEL COVER 1".

SHEA PRODUCT ID: MH-467	FILE NAME: MH 4X6X7		
WEIGHT (LBS): 14290	DRAWN BY: L.P.	DATE: 2/5/2018	PAGE: I.C.4

NPCA CERTIFIED PLANT

Specifications subject to change without notice

SHEA CONCRETE PRODUCTS
New England's Premier Precaster
800-696-7432 (SHEA)
www.sheaconcrete.com
MAILING ADDRESS: 87 HAVERHILL RD AMESBURY, MA 01913

MANHOLE 4' X 8' X 6'

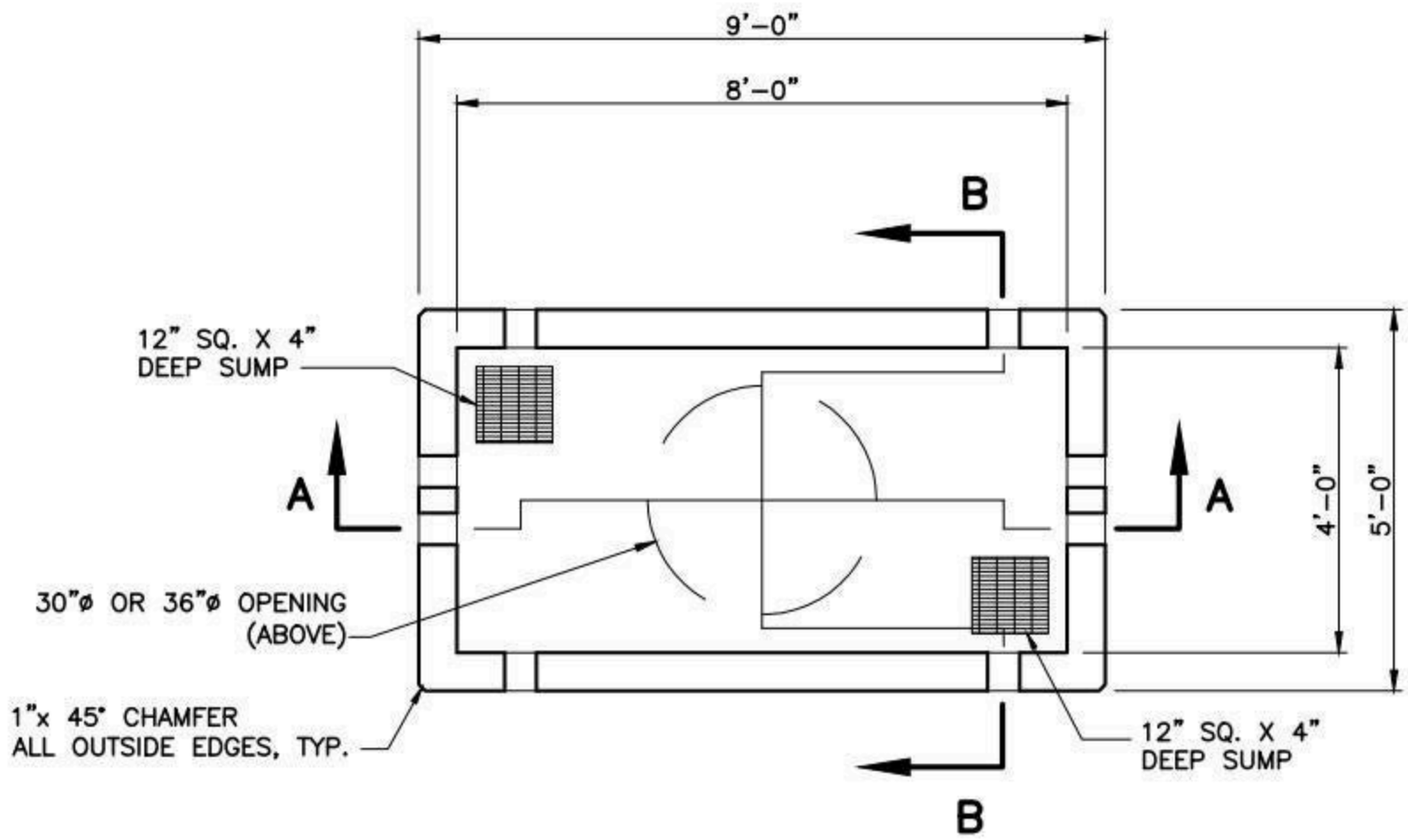

PLAN

NOTES:

1. CONCRETE: 5,000 PSI MINIMUM AFTER 28 DAYS.
2. DESIGN LOADING: AASHTO HS20-44, 0 TO 5 FEET COVER.
3. STEEL REINFORCEMENT CONFORMS TO ASTM A615, GRADE 60.
4. MINIMUM STEEL COVER 1".

SHEA PRODUCT ID: MH-486	FILE NAME: MH 4X8X6		
WEIGHT (LBS): 17480	DRAWN BY: L.P.	DATE: 2/5/2018	PAGE: I.C.5-1

NPCA CERTIFIED PLANT

773 Salem Street-Wilmington, MA | 153 Cranberry Hwy-Rochester, MA | 87 Haverhill Road-Amesbury, MA | 160 Old Turnpike Rd-Nottingham, NH

Specifications subject to change without notice

SHEA CONCRETE PRODUCTS
New England's Premier Precaster
800-696-7432 (SHEA)
www.sheaconcrete.com
MAILING ADDRESS: 87 HAVERHILL RD AMESBURY, MA 01913

MANHOLE 4' X 8' X 6'

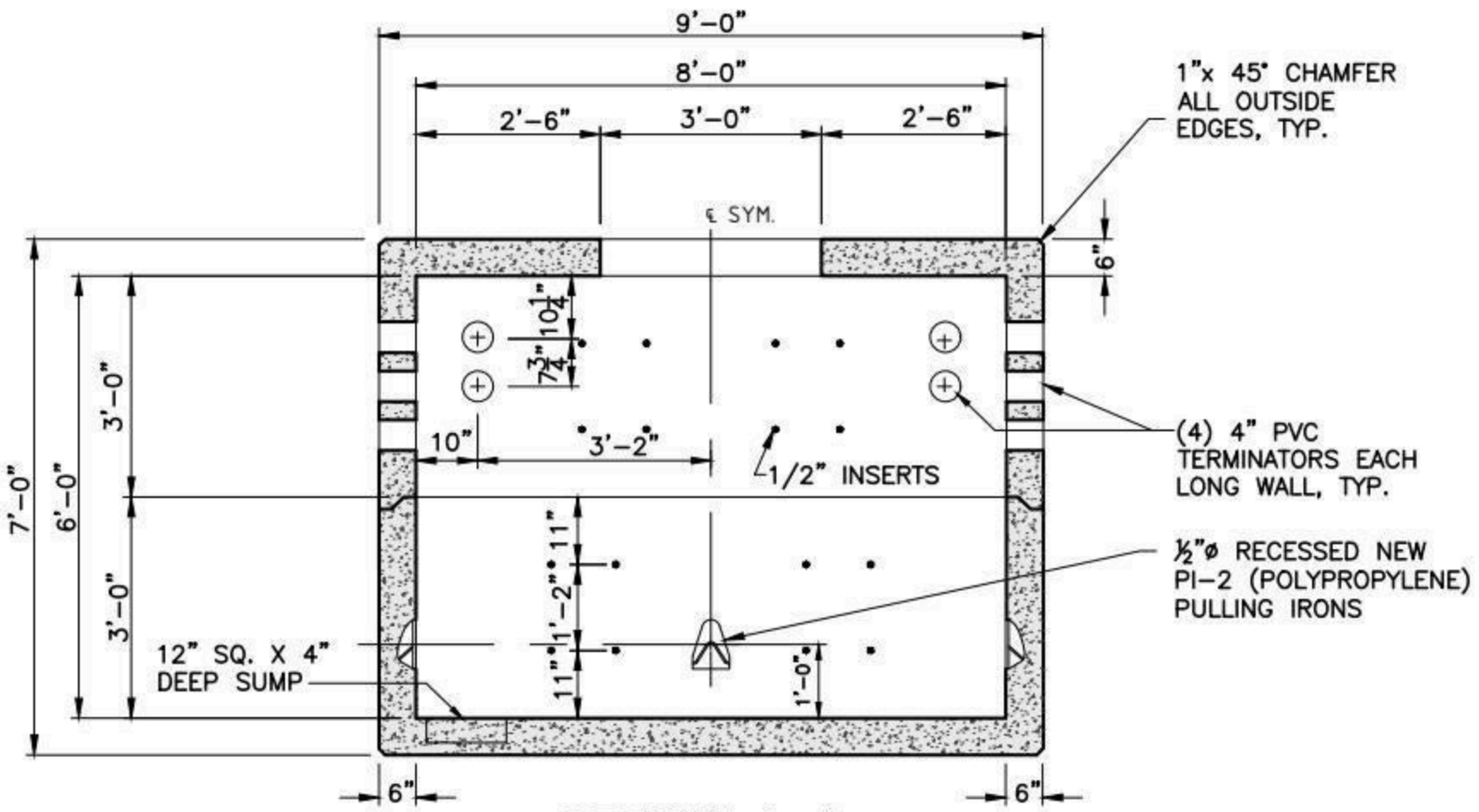

SECTION A-A

OPPOSITE WALLS ARE MIRROR IMAGES.

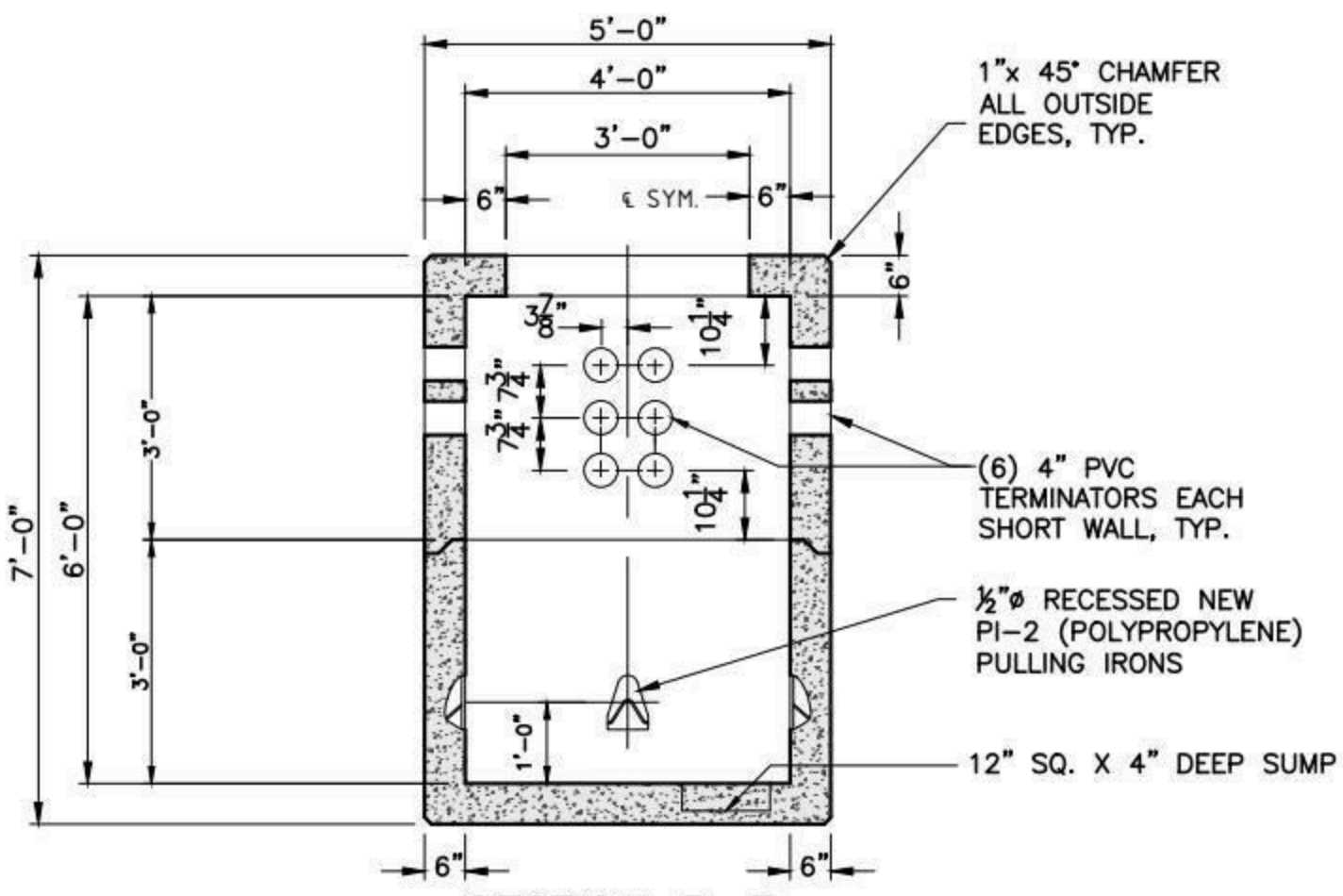

SECTION B-B

OPPOSITE WALLS ARE MIRROR IMAGES.

SHEA PRODUCT ID: MH-486	FILE NAME: MH 4X8X6		
WEIGHT (LBS): 17480	DRAWN BY: L.P.	DATE: 2/5/2018	PAGE: I.C.5-2

NPCA CERTIFIED PLANT

773 Salem Street-Wilmington, MA | 153 Cranberry Hwy-Rochester, MA | 87 Haverhill Road-Amesbury, MA | 160 Old Turnpike Rd-Nottingham, NH

Specifications subject to change without notice

SHEA CONCRETE PRODUCTS
New England's Premier Precaster
800-696-7432 (SHEA)
www.sheaconcrete.com
MAILING ADDRESS: 87 HAVERHILL RD AMESBURY, MA 01913

MANHOLE 4' X 8' X 7'

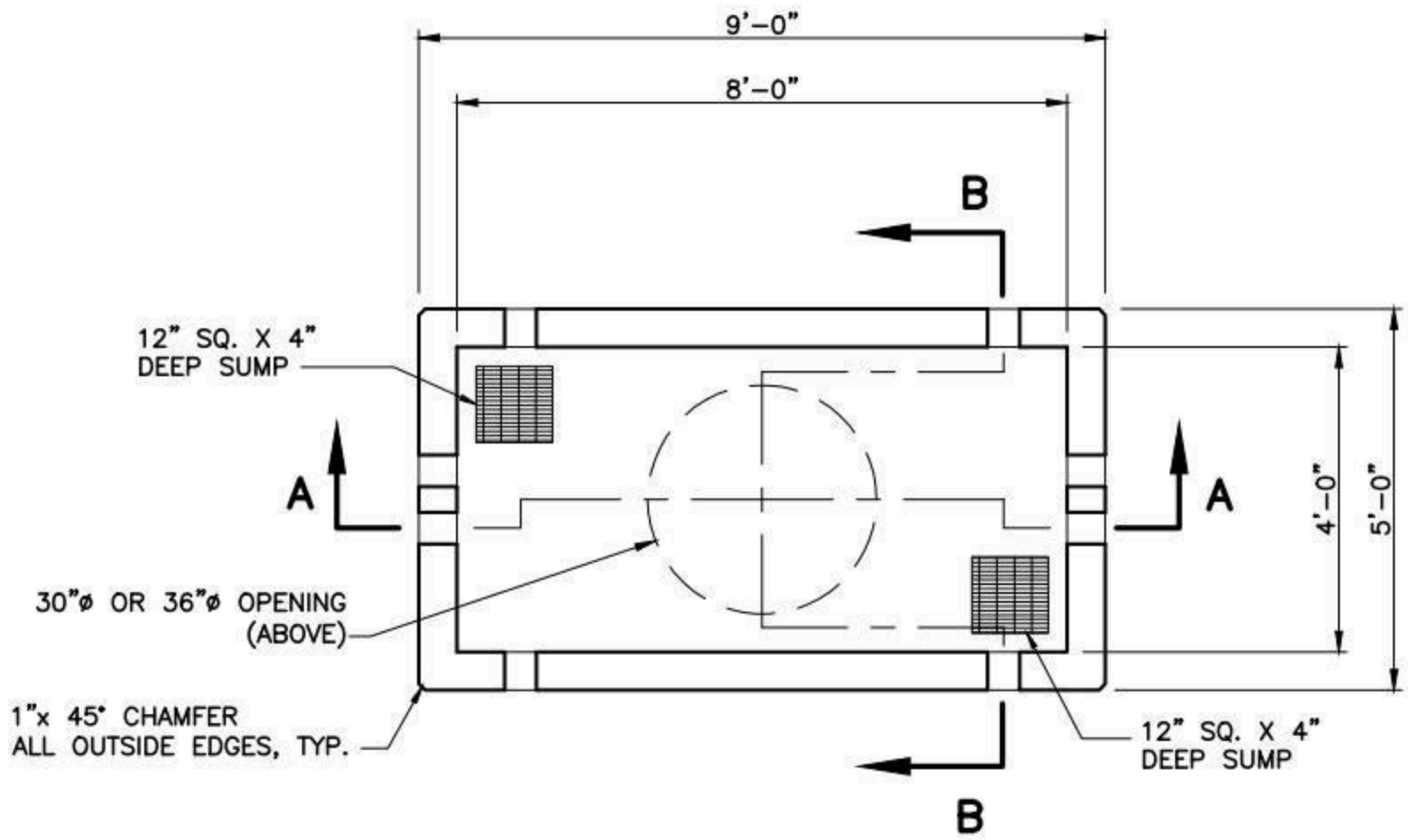

PLAN

NOTES:

1. CONCRETE: 5,000 PSI MINIMUM AFTER 28 DAYS.
2. DESIGN LOADING: AASHTO HS20-44, 0 TO 5 FEET COVER.
3. STEEL REINFORCEMENT CONFORMS TO ASTM A615, GRADE 60.
4. MINIMUM STEEL COVER 1".

SHEA PRODUCT ID: MH-487	FILE NAME: MH 4X8X7		
WEIGHT (LBS): 20395	DRAWN BY: L.P.	DATE: 2/5/2018	PAGE: I.C.6-1

NPCA CERTIFIED PLANT

Specifications subject to change without notice

SHEA CONCRETE PRODUCTS
New England's Premier Precaster
800-696-7432 (SHEA)
www.sheaconcrete.com
MAILING ADDRESS: 87 HAVERHILL RD AMESBURY, MA 01913

MANHOLE 4' X 8' X 7'

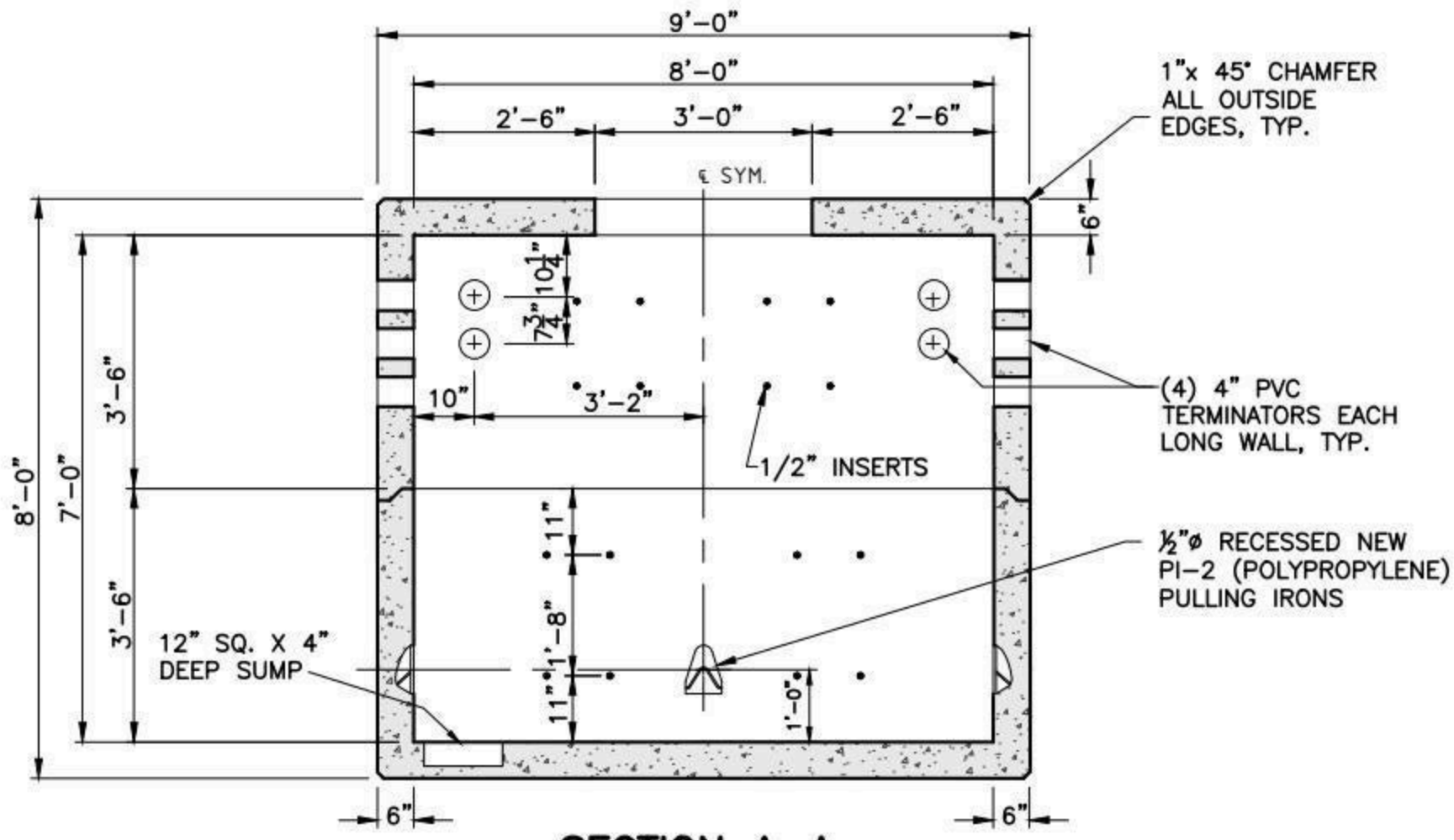

SECTION A-A

OPPOSITE WALLS ARE MIRROR IMAGES.

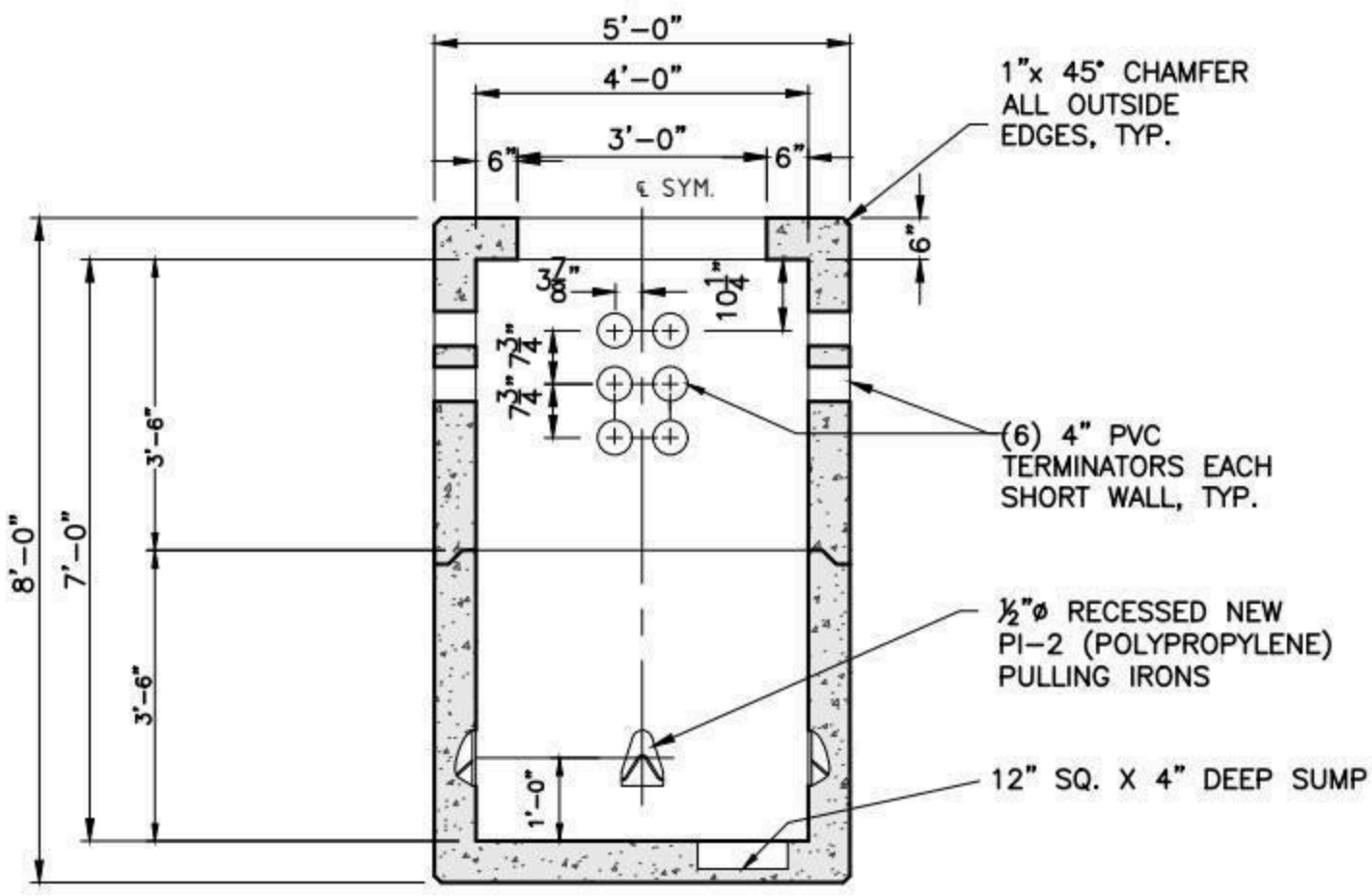

SECTION B-B

OPPOSITE WALLS ARE MIRROR IMAGES.

SHEA PRODUCT ID: MH-487	FILE NAME: MH 4X8X7		
WEIGHT (LBS): 20395	DRAWN BY: L.P.	DATE: 2/5/2018	PAGE: I.C.6-2

NPCA CERTIFIED PLANT

773 Salem Street-Wilmington, MA | 153 Cranberry Hwy-Rochester, MA | 87 Haverhill Road-Amesbury, MA | 160 Old Turnpike Rd-Nottingham, NH

Specifications subject to change without notice

SHEA CONCRETE PRODUCTS
New England's Premier Precaster
800-696-7432 (SHEA)
www.sheaconcrete.com
MAILING ADDRESS: 87 HAVERHILL RD AMESBURY, MA 01913

MANHOLE 5' X 5' X 5'

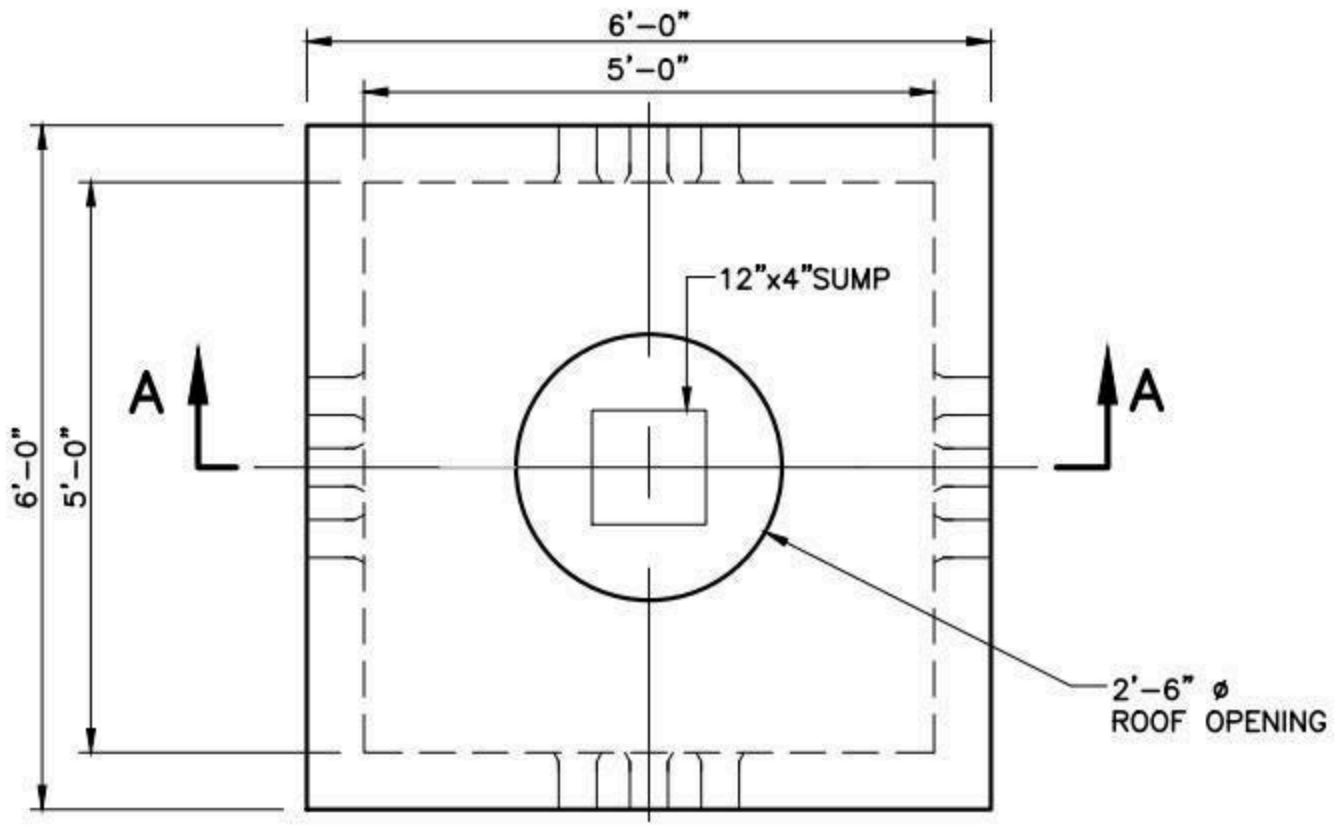

PLAN

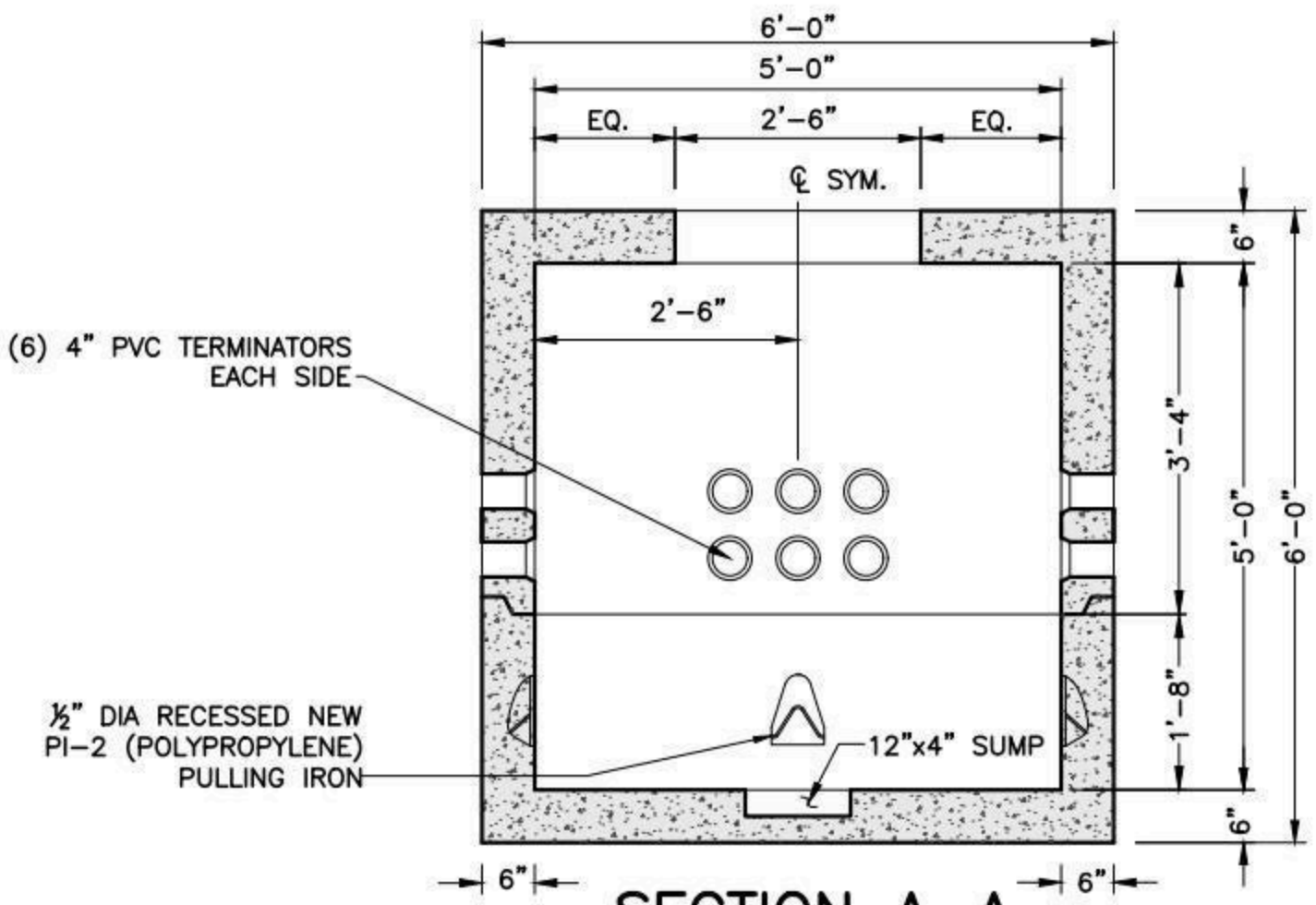

SECTION A-A

OPPOSITE/ADJACENT WALLS SIMILAR

NOTES:

1. CONCRETE: 5,000 PSI MINIMUM AFTER 28 DAYS.
2. DESIGN LOADING: AASHTO HS20-44, 0 TO 5 FEET COVER.
3. STEEL REINFORCEMENT CONFORMS TO ASTM A615, GRADE 60.
4. MINIMUM STEEL COVER 1".

SHEA PRODUCT ID: MH-555	FILE NAME: MH 5X5X5			NPCA CERTIFIED PLANT
WEIGHT (LBS): 12840	DRAWN BY: L.P.	DATE: 11/13/2018	PAGE: I.C.7	

Specifications subject to change without notice

SHEA CONCRETE PRODUCTS
New England's Premier Precaster
800-696-7432 (SHEA)
www.sheaconcrete.com
MAILING ADDRESS: 87 HAVERHILL RD AMESBURY, MA 01913

MANHOLE 5' X 7' X 6'-6"

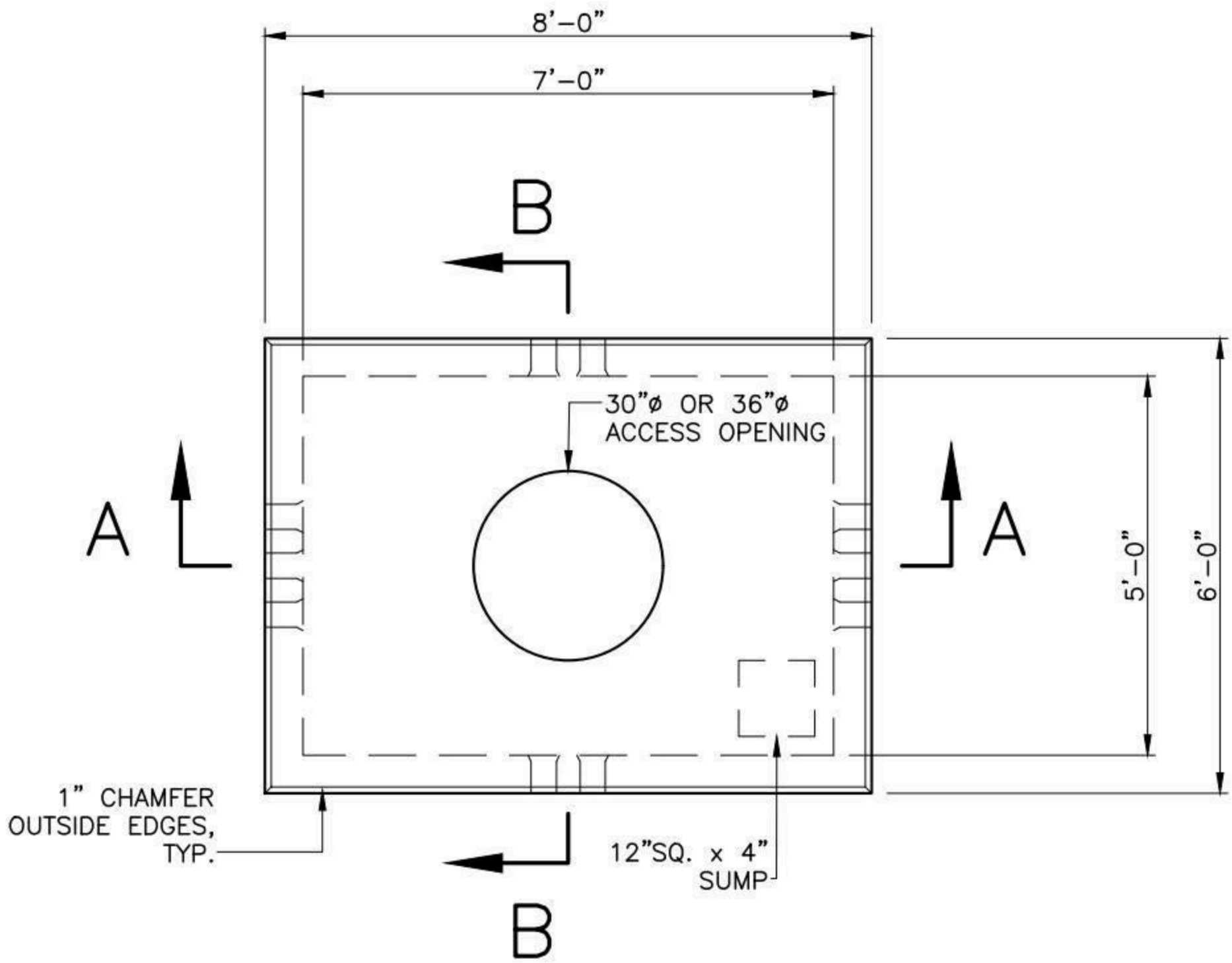

PLAN

NOTES:

1. CONCRETE: 5,000 PSI MINIMUM AFTER 28 DAYS.
2. DESIGN LOADING: AASHTO HS20-44, 0 TO 5 FEET COVER.
3. STEEL REINFORCEMENT CONFORMS TO ASTM A615, GRADE 60.
4. MINIMUM STEEL COVER 1".

SHEA PRODUCT ID: MH-576	FILE NAME: MH 5X7X6-6		
WEIGHT (LBS): 18860	DRAWN BY: L.P.	DATE: 2/5/2018	PAGE: I.C.8-1

NPCA CERTIFIED PLANT

773 Salem Street-Wilmington, MA | 153 Cranberry Hwy-Rochester, MA | 87 Haverhill Road-Amesbury, MA | 160 Old Turnpike Rd-Nottingham, NH

Specifications subject to change without notice

SHEA CONCRETE PRODUCTS
New England's Premier Precaster
800-696-7432 (SHEA)
www.sheaconcrete.com
MAILING ADDRESS: 87 HAVERHILL RD AMESBURY, MA 01913

MANHOLE 5' X 7' X 6'-6"

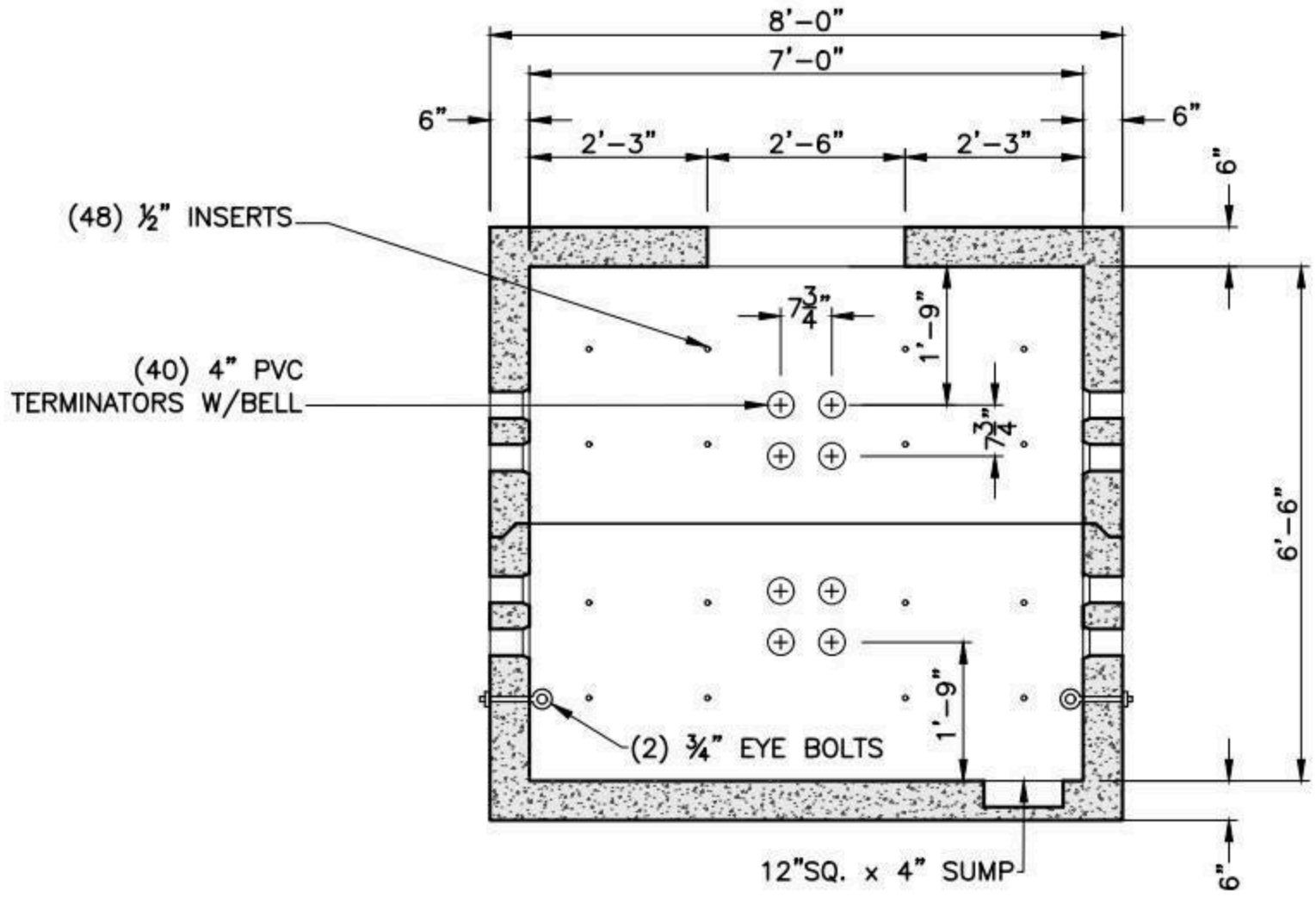

SECTION A-A

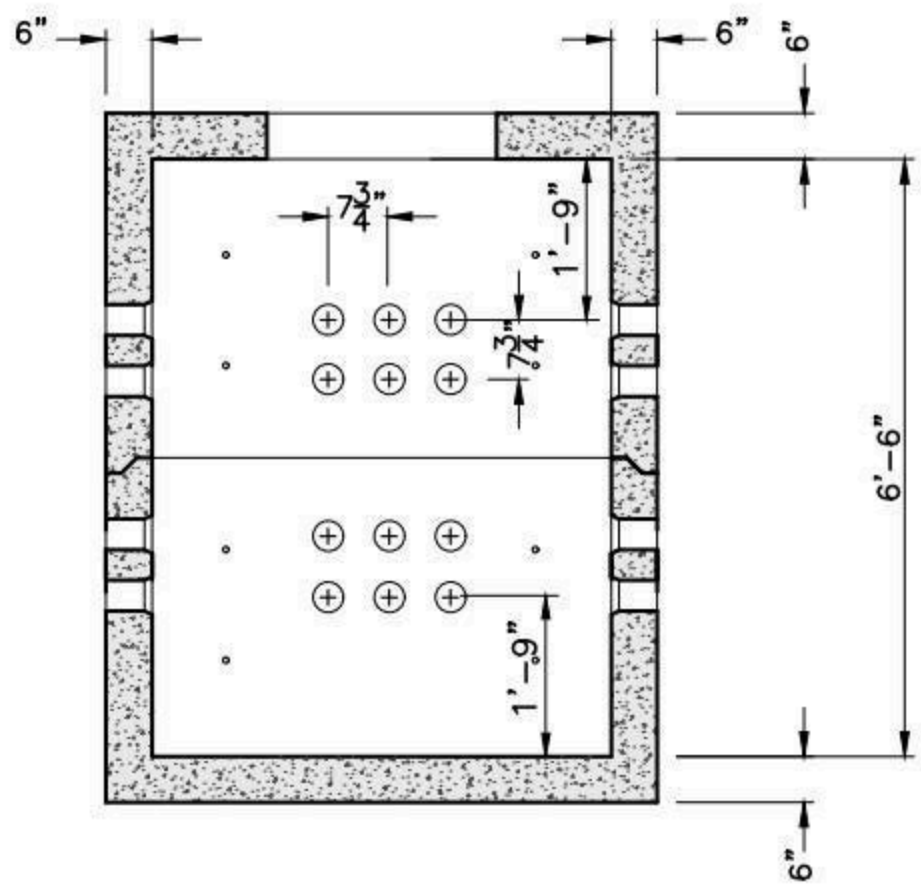

SECTION B-B

SHEA PRODUCT ID: MH-576	FILE NAME: MH 5X7X6-6			NPCA CERTIFIED PLANT
WEIGHT (LBS): 18860	DRAWN BY: L.P.	DATE: 2/5/2018	PAGE: I.C.8-2	

Specifications subject to change without notice

SHEA CONCRETE PRODUCTS
New England's Premier Precaster
800-696-7432 (SHEA)
www.sheaconcrete.com
MAILING ADDRESS: 87 HAVERHILL RD AMESBURY, MA 01913

MANHOLE 5' X 10' X 7'

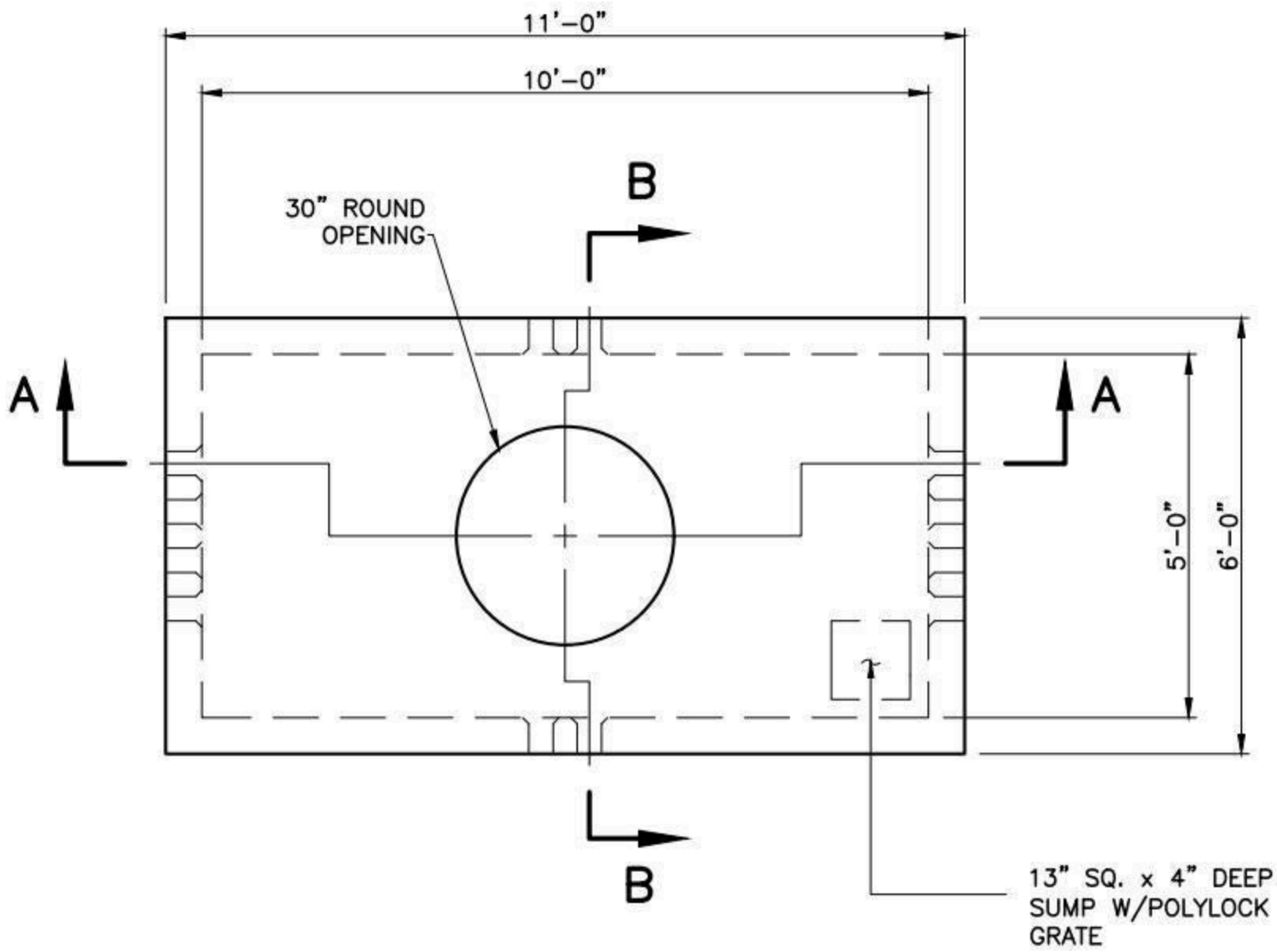

PLAN

NOTES:

1. CONCRETE: 5,000 PSI MINIMUM AFTER 28 DAYS.
2. DESIGN LOADING: AASHTO HS20-44, 0 TO 5 FEET COVER.
3. STEEL REINFORCEMENT CONFORMS TO ASTM A615, GRADE 60.
4. MINIMUM STEEL COVER 1".

SHEA PRODUCT ID: MH-5107	FILE NAME: MH 5X10X7		
WEIGHT (LBS): 38215	DRAWN BY: L.P.	DATE: 2/5/2018	PAGE: I.C.9-1

NPCA CERTIFIED PLANT

Specifications subject to change without notice

SHEA CONCRETE PRODUCTS
New England's Premier Precaster
800-696-7432 (SHEA)
www.sheaconcrete.com
MAILING ADDRESS: 87 HAVERHILL RD AMESBURY, MA 01913

MANHOLE 5' X 10' X 7'

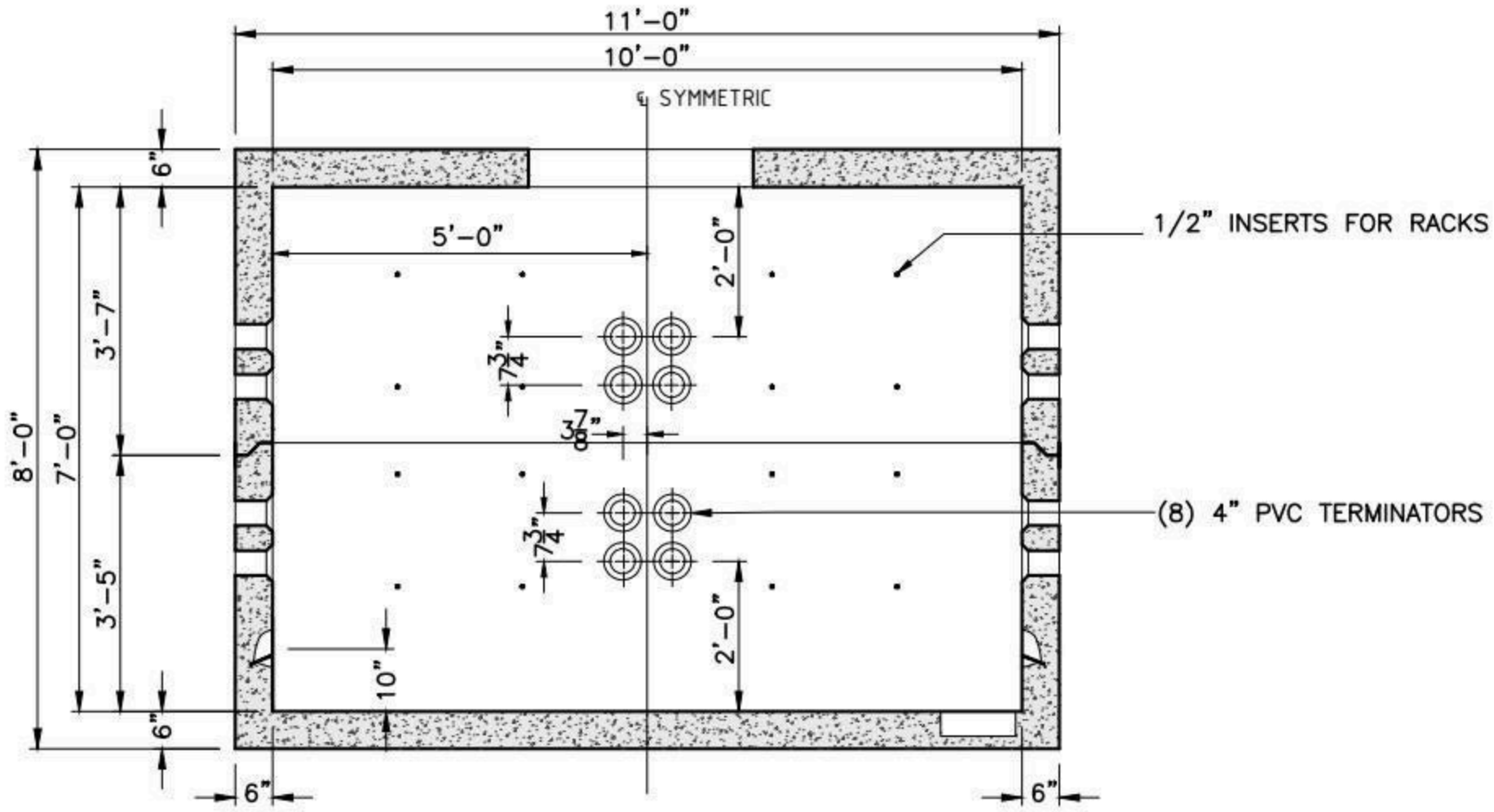

SECTION A-A

OPPOSITE WALLS ARE MIRROR IMAGES.

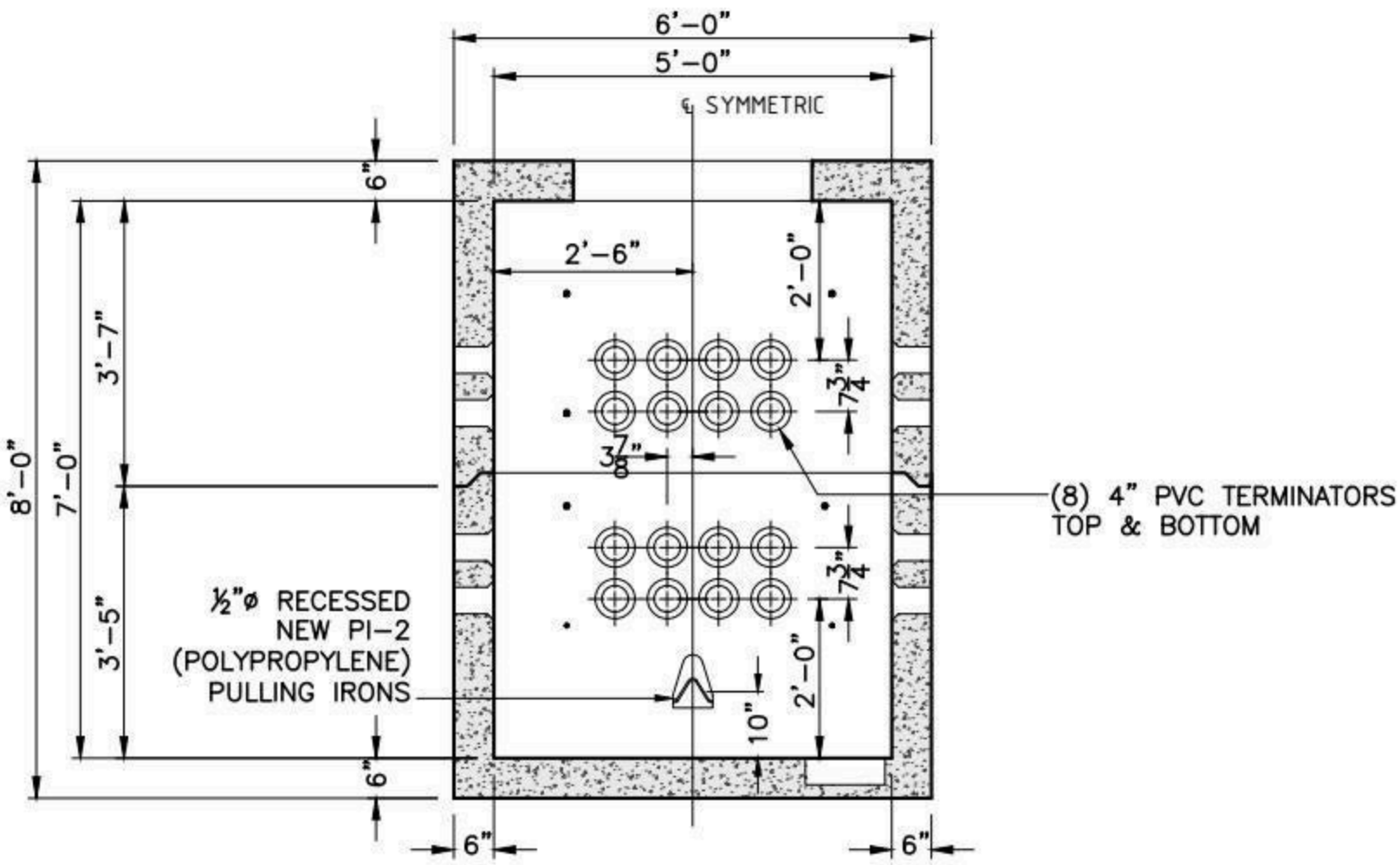

SECTION B-B

OPPOSITE WALLS ARE MIRROR IMAGES.

SHEA PRODUCT ID: MH-5107	FILE NAME: MH 5X10X7			
WEIGHT (LBS): 38215	DRAWN BY: L.P.	DATE: 2/5/2018	PAGE: I.C.9-2	

NPCA CERTIFIED PLANT

773 Salem Street-Wilmington, MA | 153 Cranberry Hwy-Rochester, MA | 87 Haverhill Road-Amesbury, MA | 160 Old Turnpike Rd-Nottingham, NH

Specifications subject to change without notice

SHEA CONCRETE PRODUCTS
New England's Premier Precaster
800-696-7432 (SHEA)
www.sheaconcrete.com
MAILING ADDRESS: 87 HAVERHILL RD AMESBURY, MA 01913

MANHOLE 6' X 6' X 7'

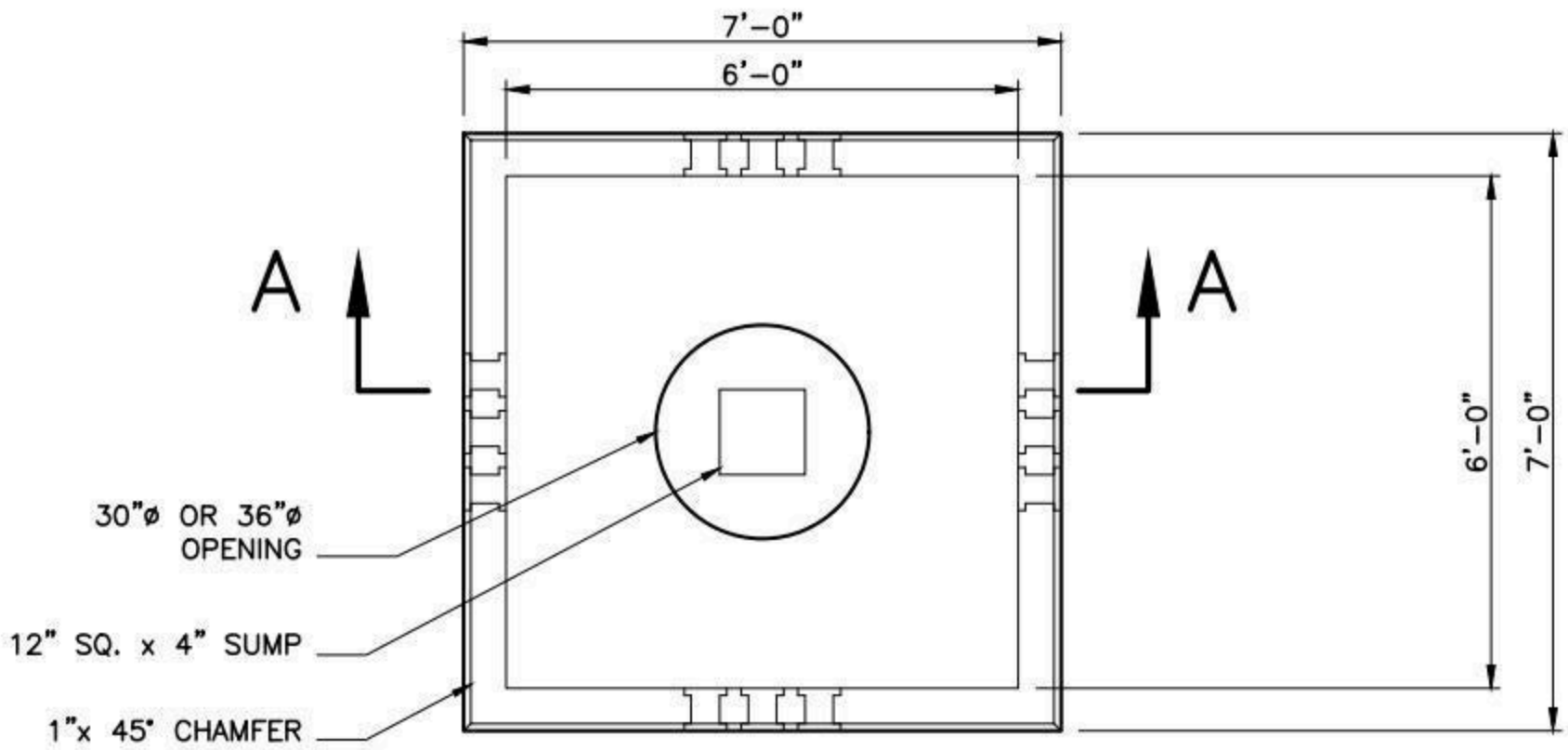

PLAN

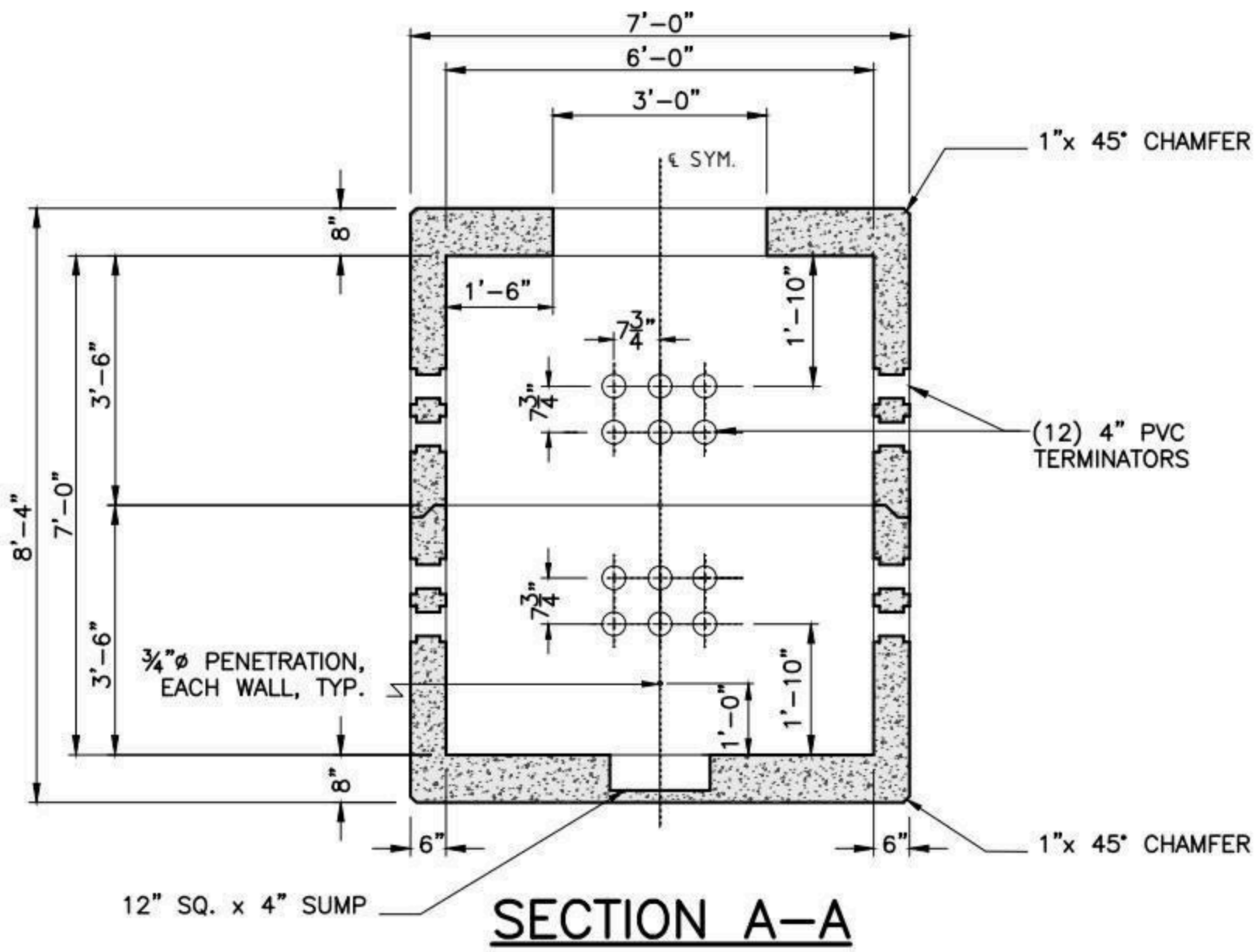

SECTION A–A

OPPOSITE WALLS ARE MIRROR IMAGES.

NOTES:

1. CONCRETE: 5,000 PSI MINIMUM AFTER 28 DAYS.
2. DESIGN LOADING: AASHTO HS20-44, 0 TO 5 FEET COVER.
3. STEEL REINFORCEMENT CONFORMS TO ASTM A615, GRADE 60.
4. MINIMUM STEEL COVER 1"

SHEA PRODUCT ID: MH-667	FILE NAME: MH 6X6X7		
WEIGHT (LBS): 22670	DRAWN BY: L.P.	DATE: 2/5/2018	PAGE: I.C.10

NPCA CERTIFIED PLANT

Specifications subject to change without notice

SHEA CONCRETE PRODUCTS
New England's Premier Precaster
800-696-7432 (SHEA)
www.sheaconcrete.com
MAILING ADDRESS: 87 HAVERHILL RD AMESBURY, MA 01913

MANHOLE 6' X 8' X 7'

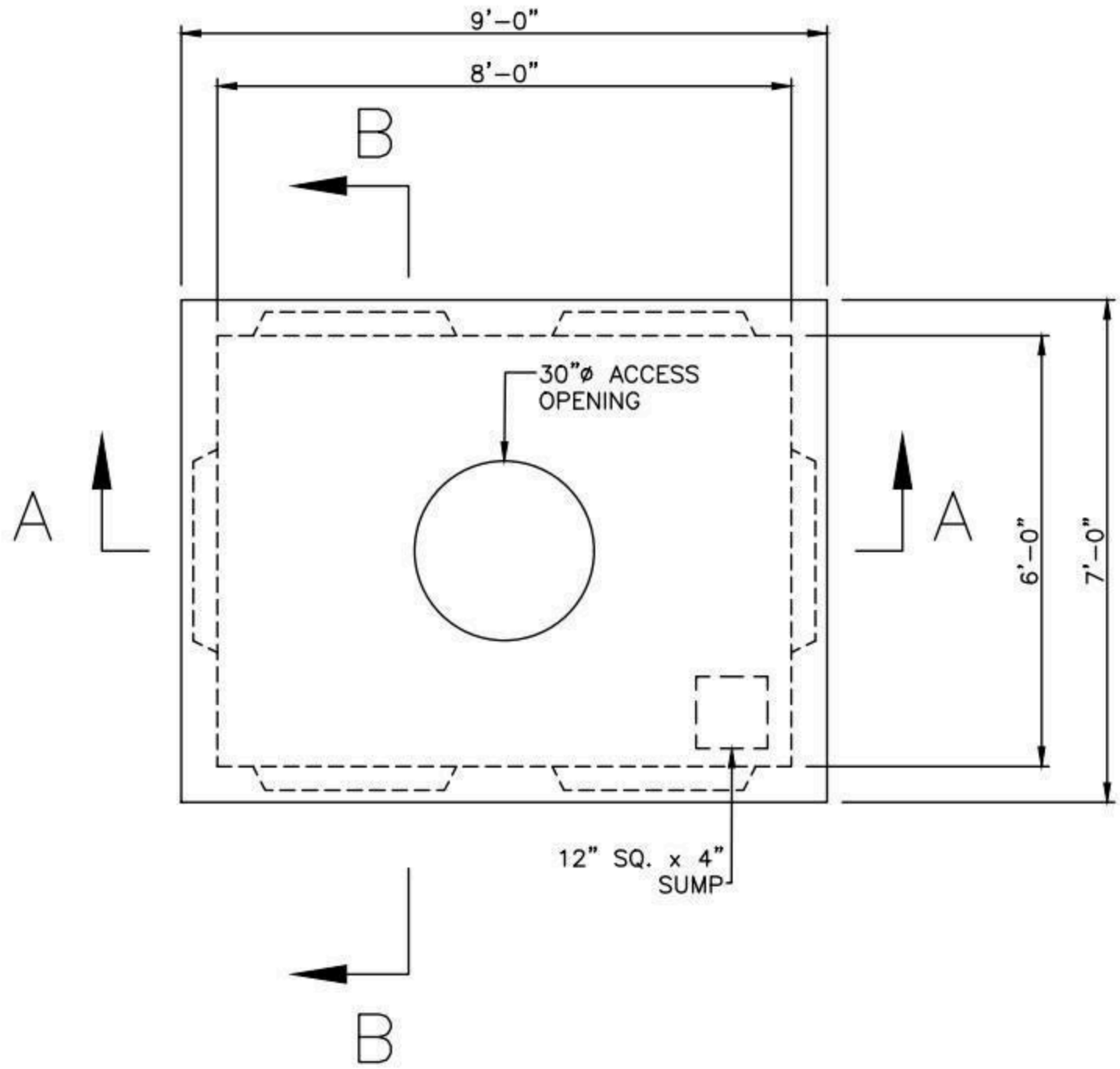

PLAN

NOTES:

1. CONCRETE: 5,000 PSI MINIMUM AFTER 28 DAYS.
2. DESIGN LOADING: AASHTO HS20-44, 0 TO 5 FEET COVER.
3. STEEL REINFORCEMENT CONFORMS TO ASTM A615, GRADE 60.
4. MINIMUM STEEL COVER 1".

SHEA PRODUCT ID: MH-687	FILE NAME: MH 6X8X7		
WEIGHT (LBS): 24005	DRAWN BY: L.P.	DATE: 11/13/2018	PAGE: I.C.11-1

NPCA CERTIFIED PLANT

773 Salem Street-Wilmington, MA | 153 Cranberry Hwy-Rochester, MA | 87 Haverhill Road-Amesbury, MA | 160 Old Turnpike Rd-Nottingham, NH

Specifications subject to change without notice

SHEA CONCRETE PRODUCTS
New England's Premier Precaster
800-696-7432 (SHEA)
www.sheaconcrete.com
MAILING ADDRESS: 87 HAVERHILL RD AMESBURY, MA 01913

MANHOLE 6' X 8' X 7'

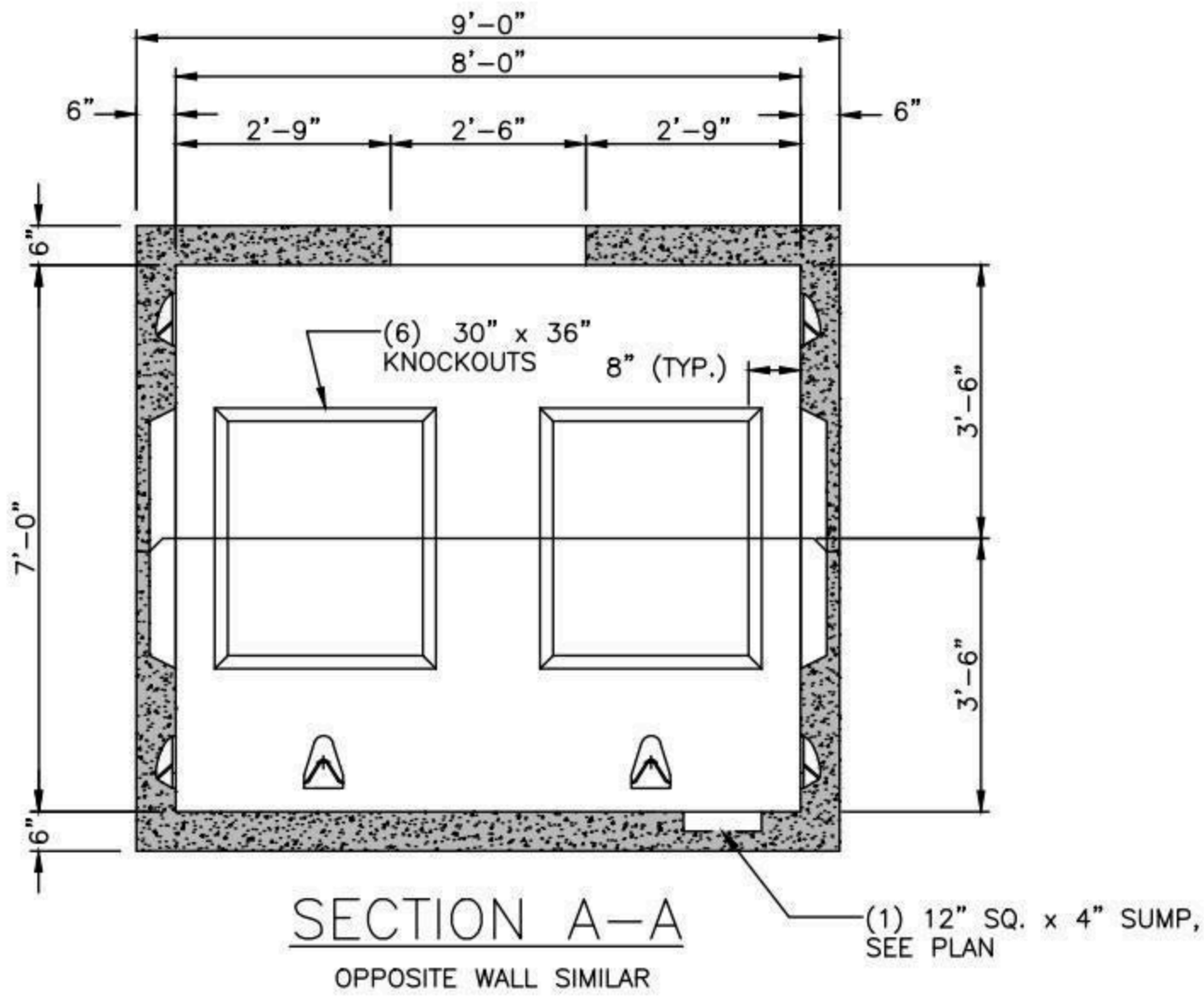

SECTION A-A

OPPOSITE WALL SIMILAR

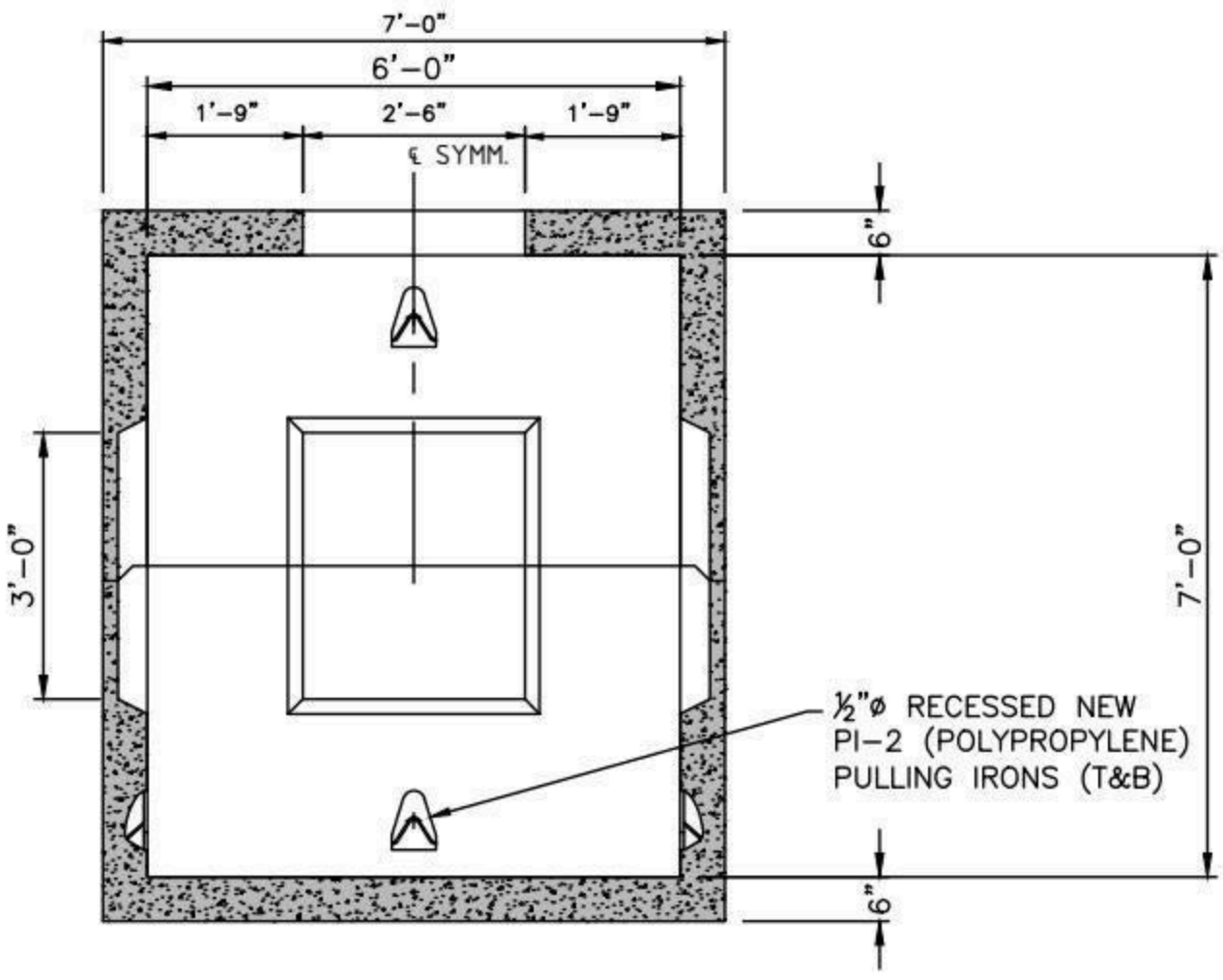

SECTION B-B

OPPOSITE WALL SIMILAR

SHEA PRODUCT ID: MH-687	FILE NAME: MH 6X8X7		
WEIGHT (LBS): 24005	DRAWN BY: L.P.	DATE: 11/13/2018	PAGE: I.C.11-2

NPCA CERTIFIED PLANT

773 Salem Street-Wilmington, MA | 153 Cranberry Hwy-Rochester, MA | 87 Haverhill Road-Amesbury, MA | 160 Old Turnpike Rd-Nottingham, NH

Specifications subject to change without notice

SHEA CONCRETE PRODUCTS
New England's Premier Precaster
800-696-7432 (SHEA)
www.sheaconcrete.com
MAILING ADDRESS: 87 HAVERHILL RD AMESBURY, MA 01913

MANHOLE 6' X 12' X 7'

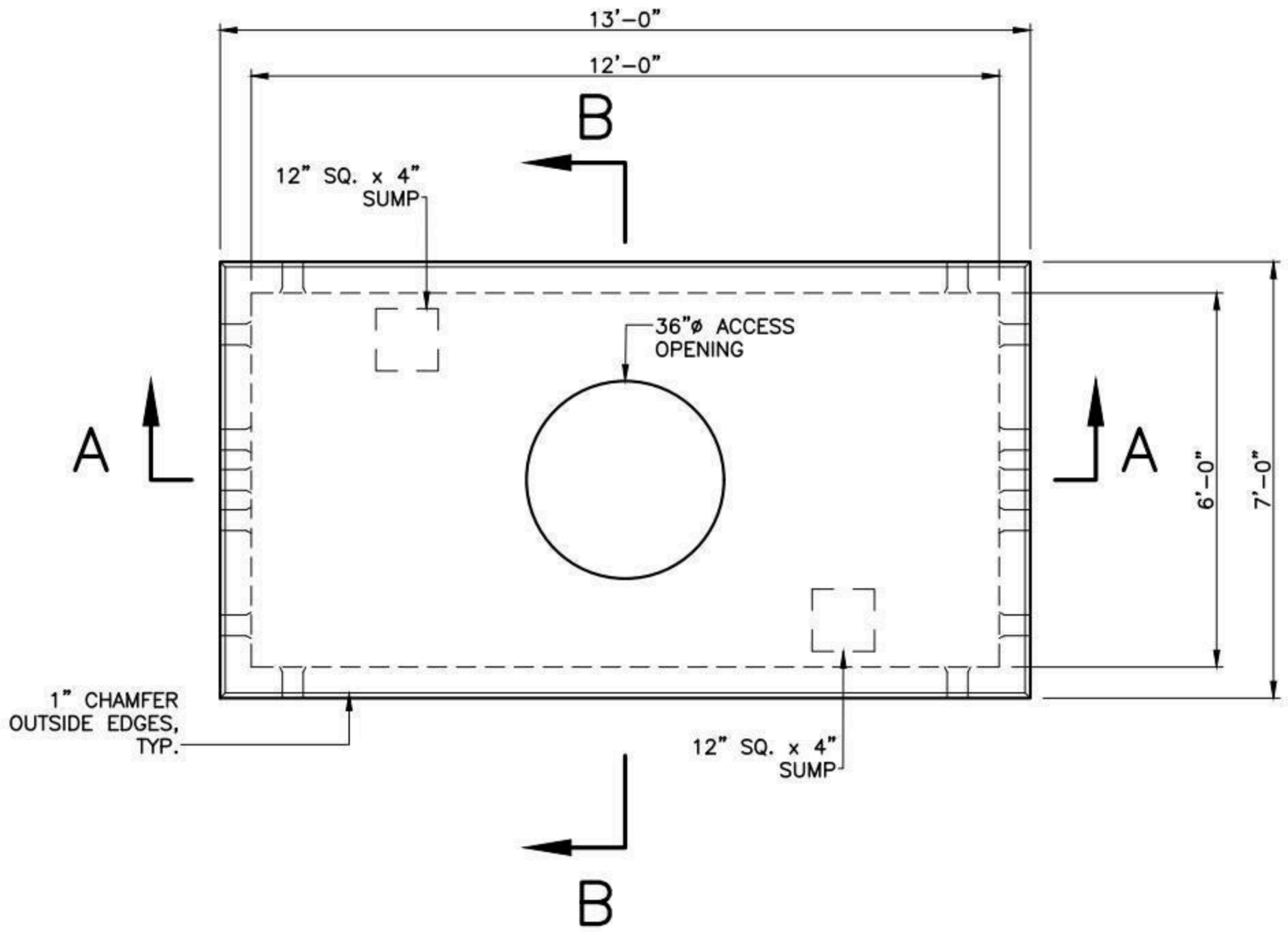

PLAN

NOTES:

1. CONCRETE: 5,000 PSI MINIMUM AFTER 28 DAYS.
2. DESIGN LOADING: AASHTO HS20-44, 0 TO 5 FEET COVER.
3. STEEL REINFORCEMENT CONFORMS TO ASTM A615, GRADE 60.
4. MINIMUM STEEL COVER 1".

SHEA PRODUCT ID: MH-6127	FILE NAME: MH 6X12X7		
WEIGHT (LBS): 36880	DRAWN BY: L.P.	DATE: 2/6/2018	PAGE: I.C.12-1

NPCA CERTIFIED PLANT

773 Salem Street-Wilmington, MA | 153 Cranberry Hwy-Rochester, MA | 87 Haverhill Road-Amesbury, MA | 160 Old Turnpike Rd-Nottingham, NH

Specifications subject to change without notice

SHEA CONCRETE PRODUCTS
New England's Premier Precaster
800-696-7432 (SHEA)
www.sheaconcrete.com
MAILING ADDRESS: 87 HAVERHILL RD AMESBURY, MA 01913

MANHOLE 6' X 12' X 7'

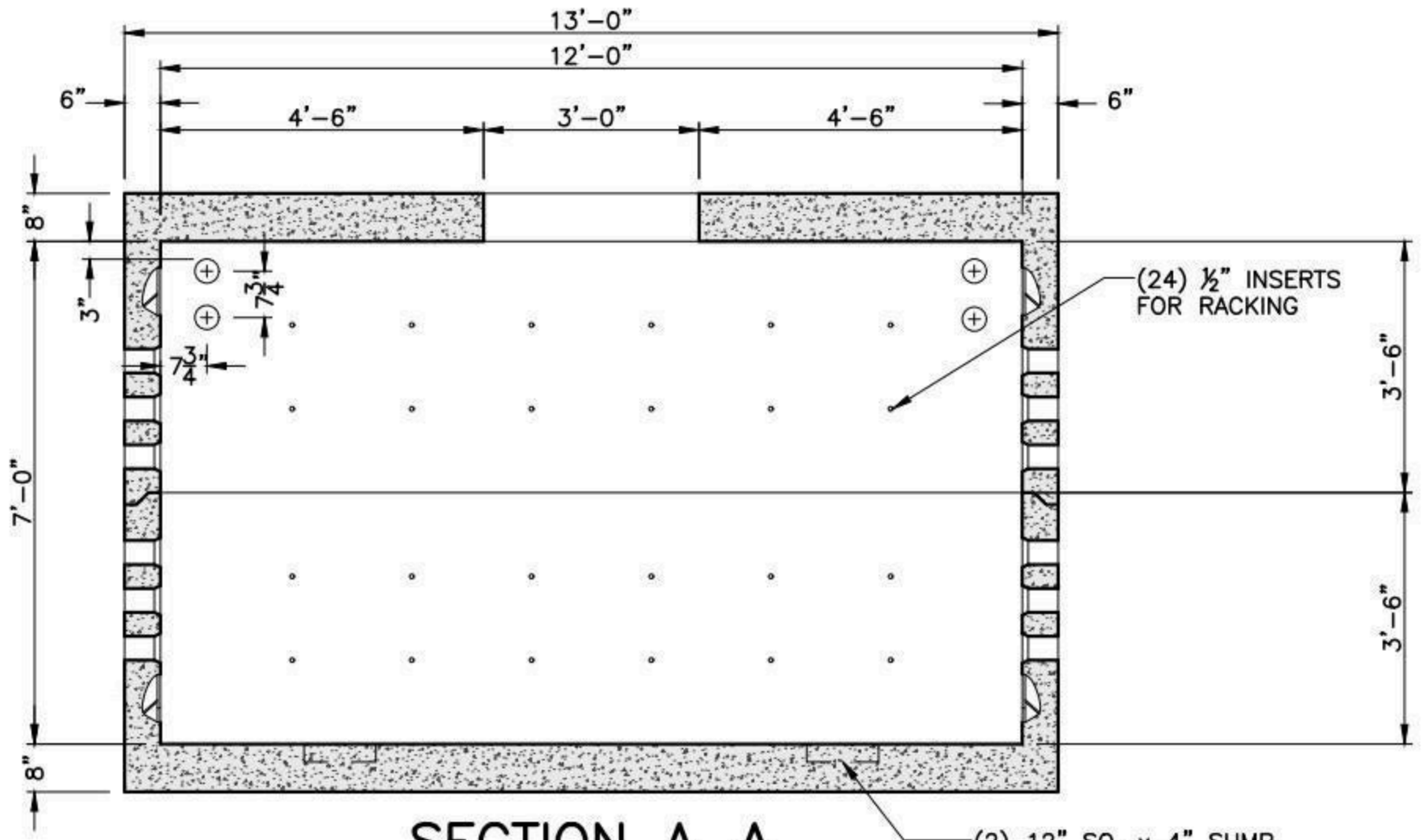

SECTION A-A

OPPOSITE WALL SIMILAR

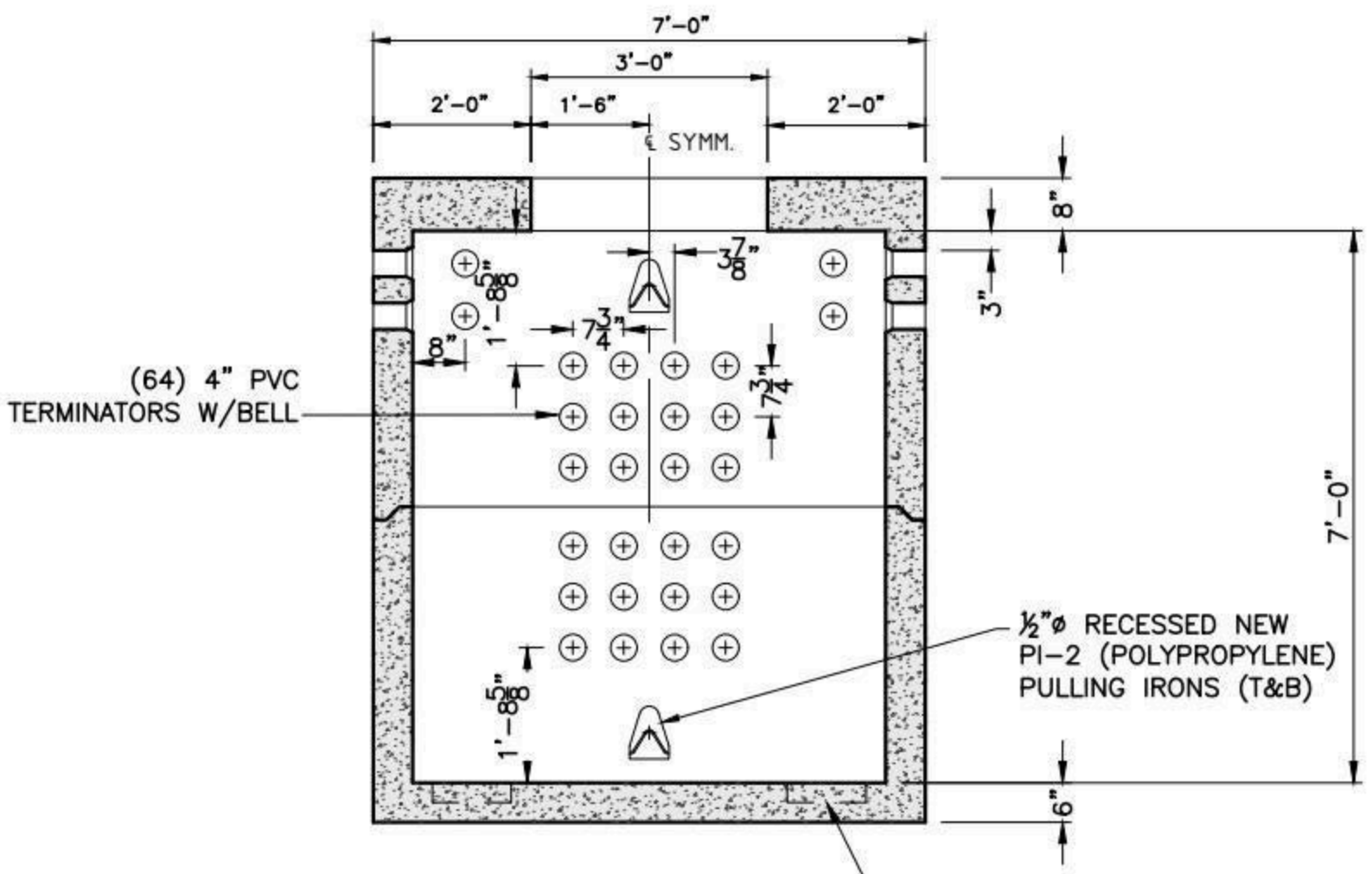

SECTION B-B

OPPOSITE WALL SIMILAR

SHEA PRODUCT ID: MH-6127	FILE NAME: MH 6X12X7		
WEIGHT (LBS): 36880	DRAWN BY: L.P.	DATE: 2/6/2018	PAGE: I.C.12-2

NPCA CERTIFIED PLANT

773 Salem Street-Wilmington, MA | 153 Cranberry Hwy-Rochester, MA | 87 Haverhill Road-Amesbury, MA | 160 Old Turnpike Rd-Nottingham, NH

Specifications subject to change without notice

SHEA CONCRETE PRODUCTS
New England's Premier Precaster
800-696-7432 (SHEA)
www.sheaconcrete.com
MAILING ADDRESS: 87 HAVERHILL RD AMESBURY, MA 01913

MANHOLE 8' X 8' X 8'

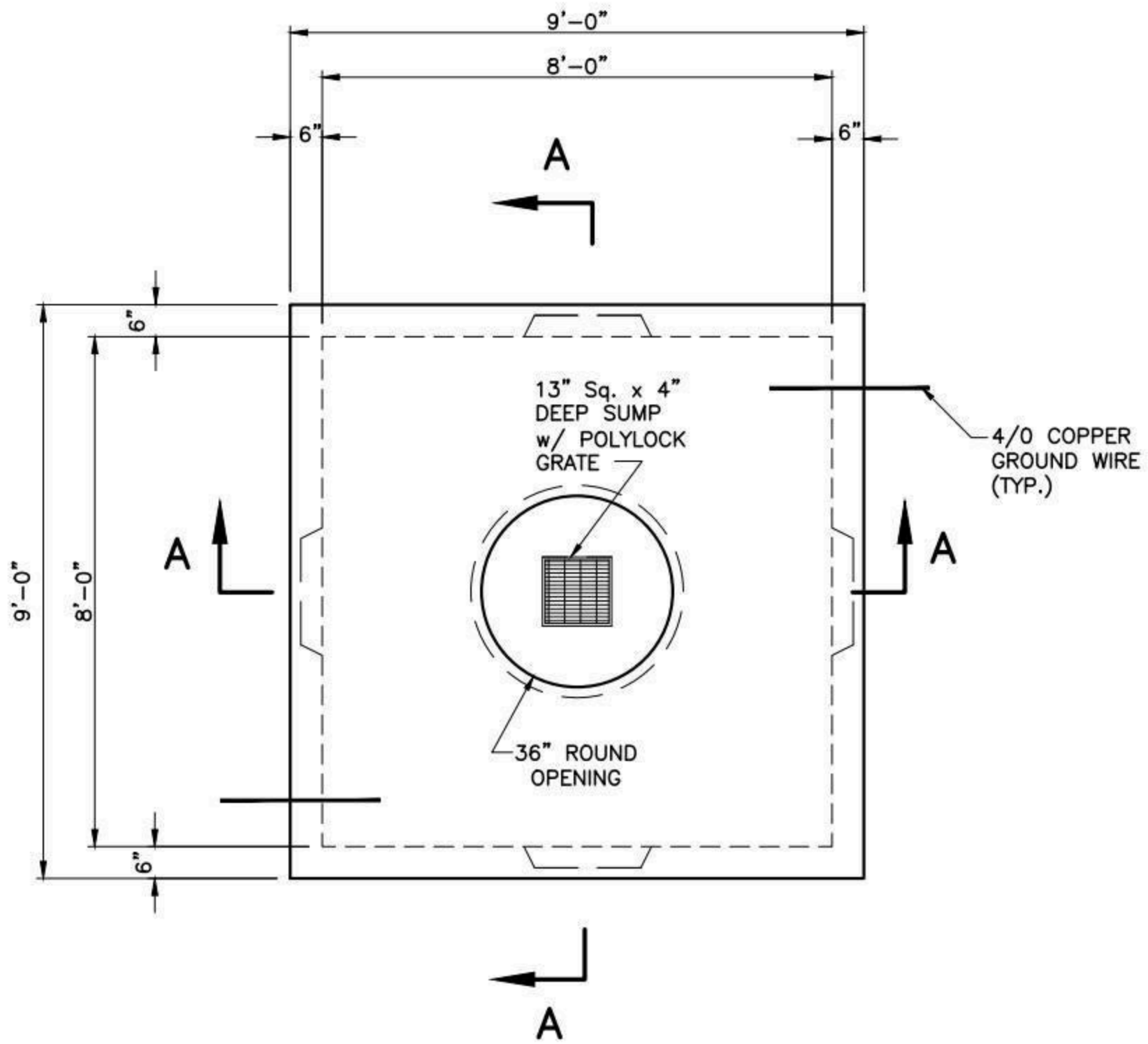

PLAN

NOTES:

1. CONCRETE: 5,000 PSI MINIMUM STRENGTH AFTER 28 DAYS
2. DESIGN LOADING: AASHTO HS20-44, 0 TO 5 FEET COVER.
3. STEEL REINFORCEMENT CONFORMS TO ASTM A615, GRADE 60.
4. MINIMUM STEEL COVER 1".

SHEA PRODUCT ID: MH-888	FILE NAME: MH 8X8X8			NPCA CERTIFIED PLANT
WEIGHT (LBS): 33425	DRAWN BY: L.P.	DATE: 2/6/2018	PAGE: I.C.13-1	

Specifications subject to change without notice

SHEA CONCRETE PRODUCTS
New England's Premier Precaster
800-696-7432 (SHEA)
www.sheaconcrete.com
MAILING ADDRESS: 87 HAVERHILL RD AMESBURY, MA 01913

MANHOLE 8' X 8' X 8'

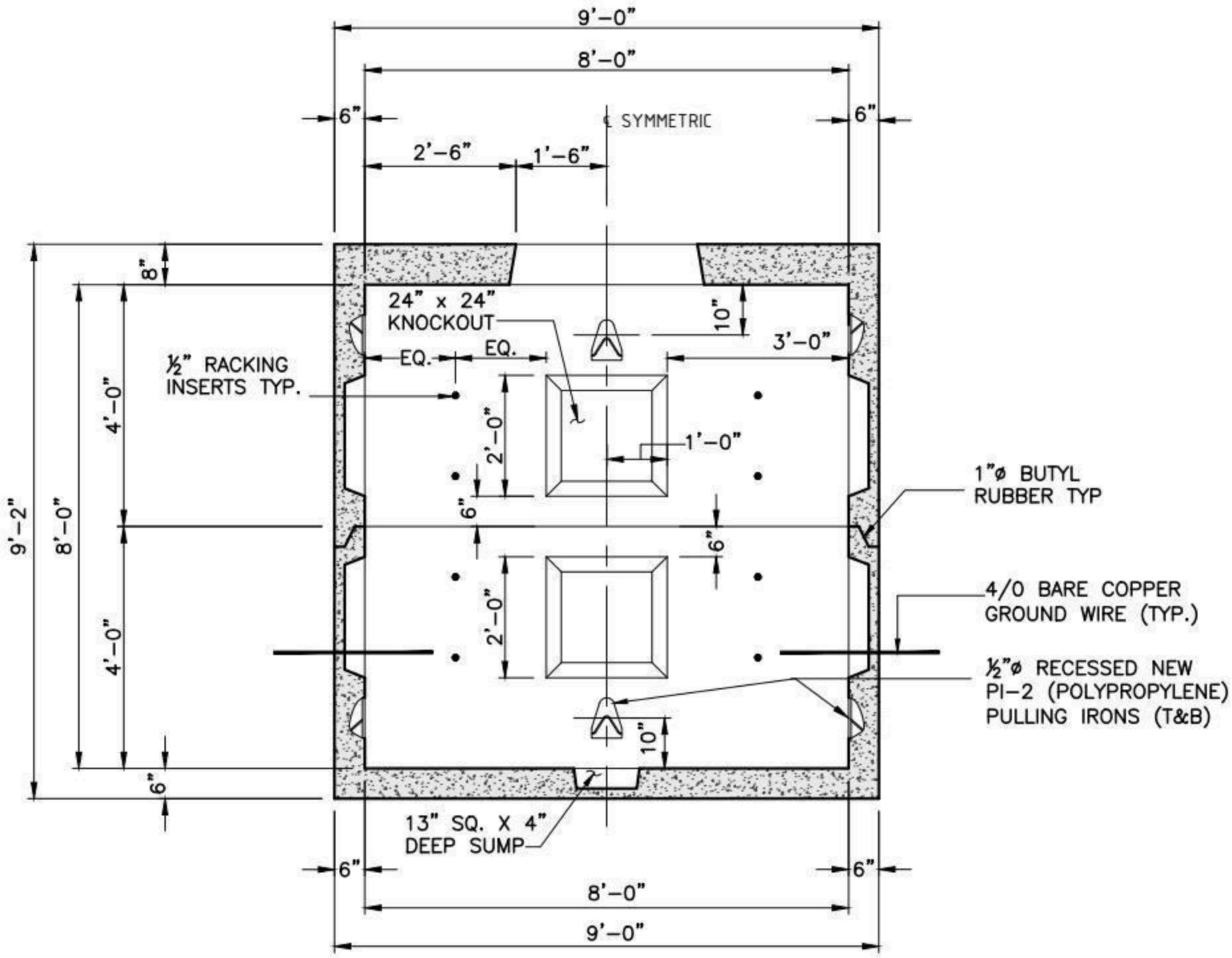

SECTION A-A

ALL WALLS SIMILAR

SHEA PRODUCT ID: MH-888	FILE NAME: MH 8X8X8			
WEIGHT (LBS): 33425	DRAWN BY: L.P.	DATE: 2/6/2018	PAGE: I.C.13-2	

773 Salem Street-Wilmington, MA | 153 Cranberry Hwy-Rochester, MA | 87 Haverhill Road-Amesbury, MA | 160 Old Turnpike Rd-Nottingham, NH

NPCA CERTIFIED PLANT

Specifications subject to change without notice

SHEA CONCRETE PRODUCTS
New England's Premier Precaster
800-696-7432 (SHEA)
www.sheaconcrete.com
MAILING ADDRESS: 87 HAVERHILL RD AMESBURY, MA 01913

CABLE TRENCH 20X15 MEDIUM DUTY

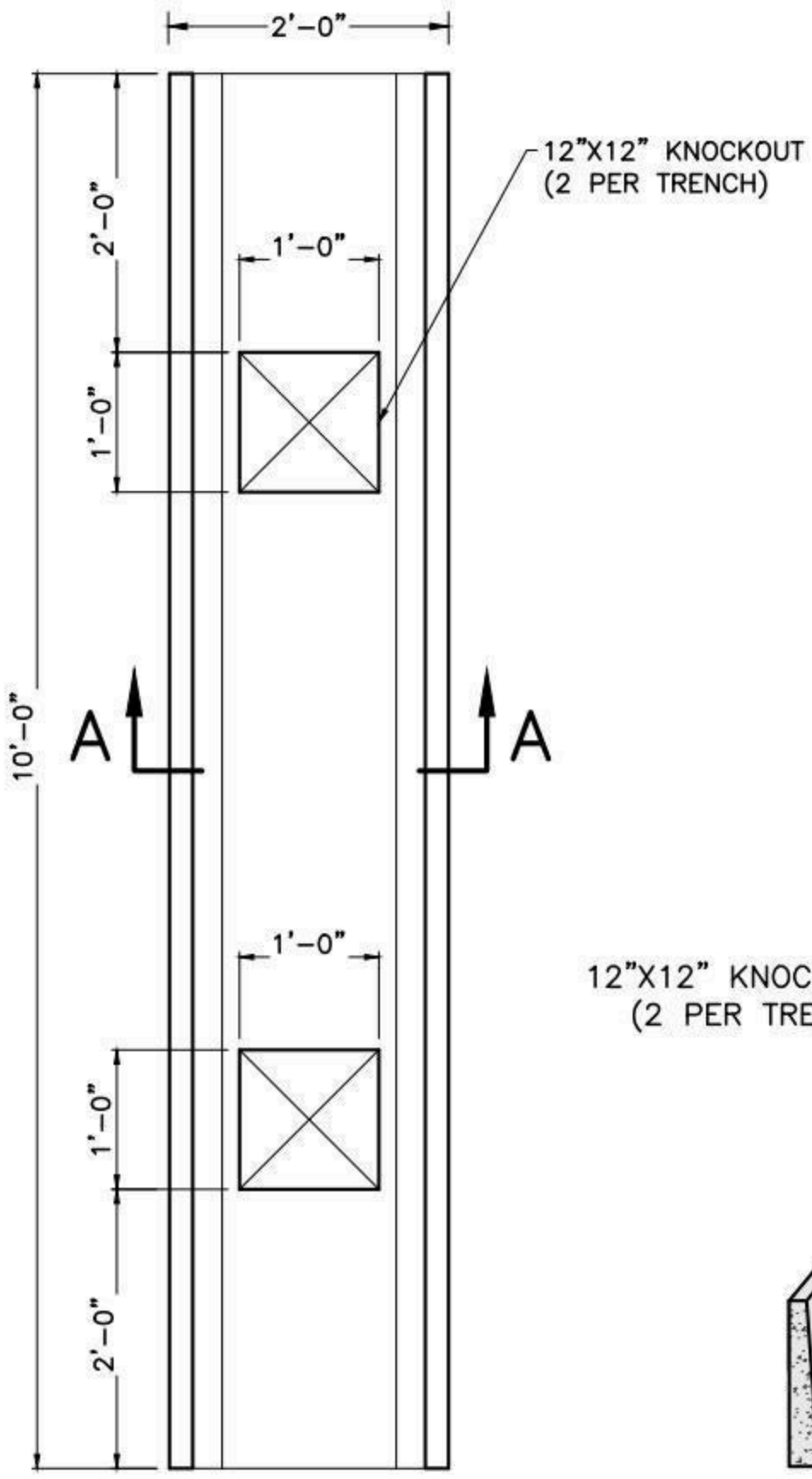

TRENCH PLAN

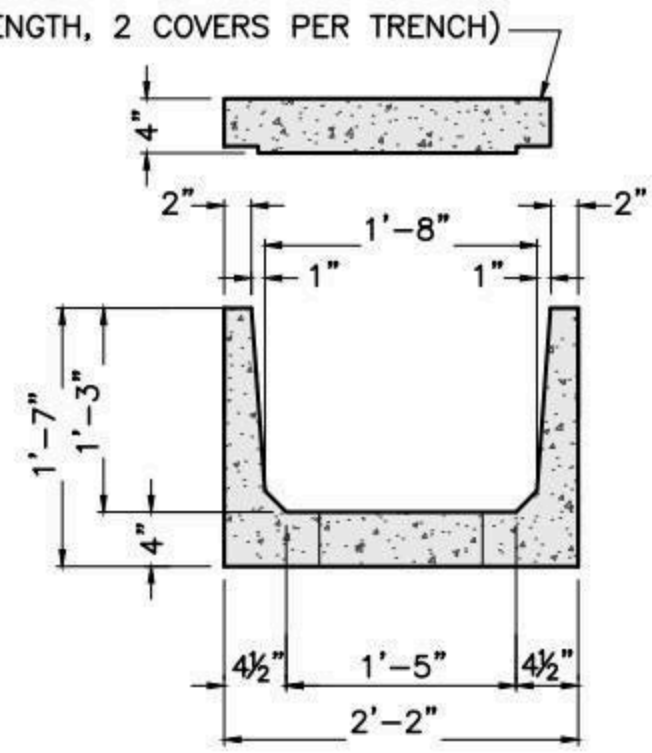

SECTION A-A

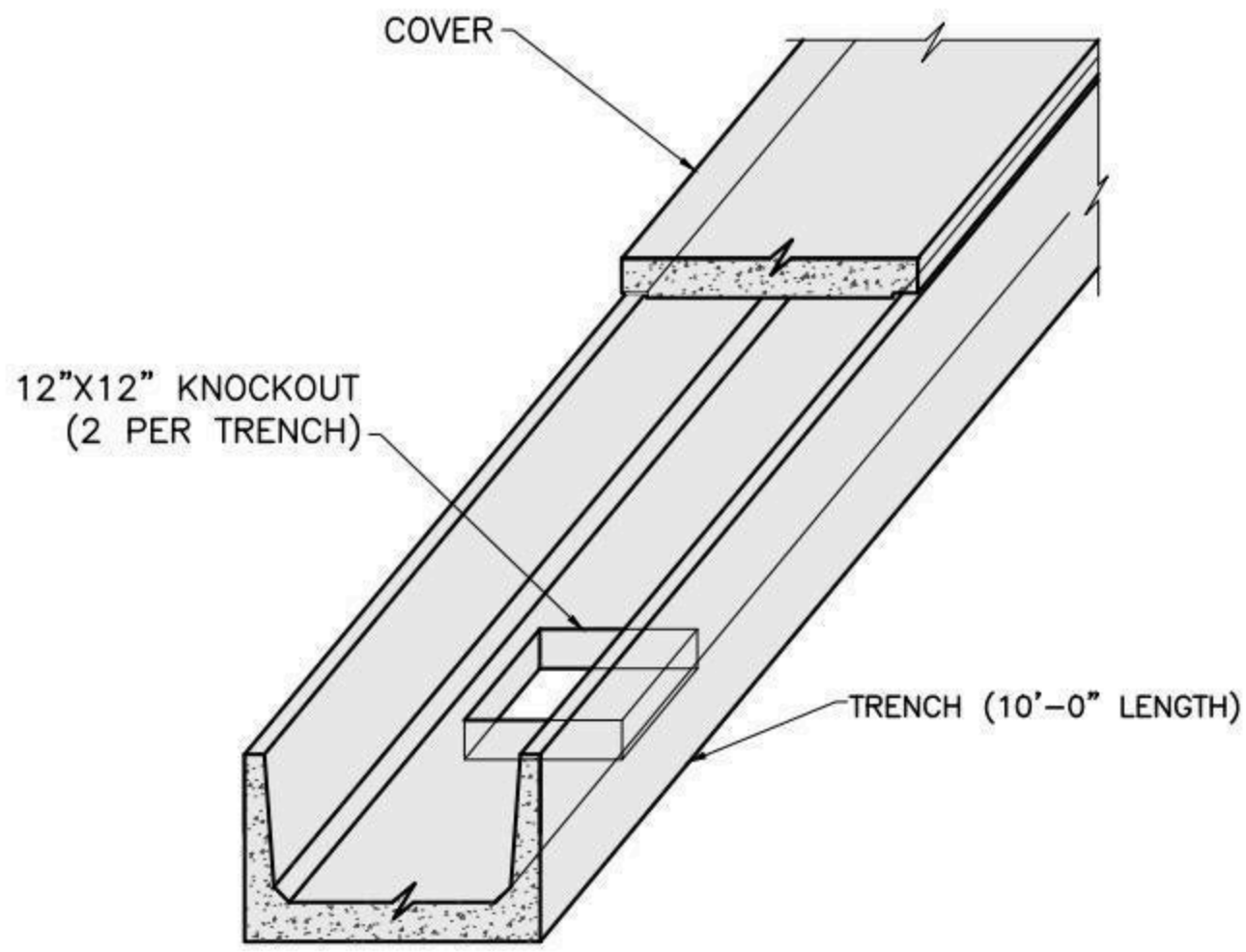

ISOMETRIC

NOTES:

1. CONCRETE: 5,000 PSI MINIMUM AFTER 28 DAYS.
2. STEEL REINFORCEMENT CONFORMS TO ASTM A615, GRADE 60.
3. MINIMUM STEEL COVER 1".
4. OTHER SIZES AVAILABLE UPON REQUEST.

SHEA PRODUCT ID: NSCT-20X15MD	FILE NAME: CT 20X15MD		
WEIGHT (LBS): 185/LF	DRAWN BY: L.P.	DATE: 6/6/2018	PAGE: I.D.1

NPCA CERTIFIED PLANT

773 Salem Street-Wilmington, MA | 153 Cranberry Hwy-Rochester, MA | 87 Haverhill Road-Amesbury, MA | 160 Old Turnpike Rd-Nottingham, NH

Specifications subject to change without notice

SHEA CONCRETE PRODUCTS
New England's Premier Precaster
800-696-7432 (SHEA)
www.sheaconcrete.com
MAILING ADDRESS: 87 HAVERHILL RD AMESBURY, MA 01913

CABLE TRENCH 20X16 HEAVY DUTY

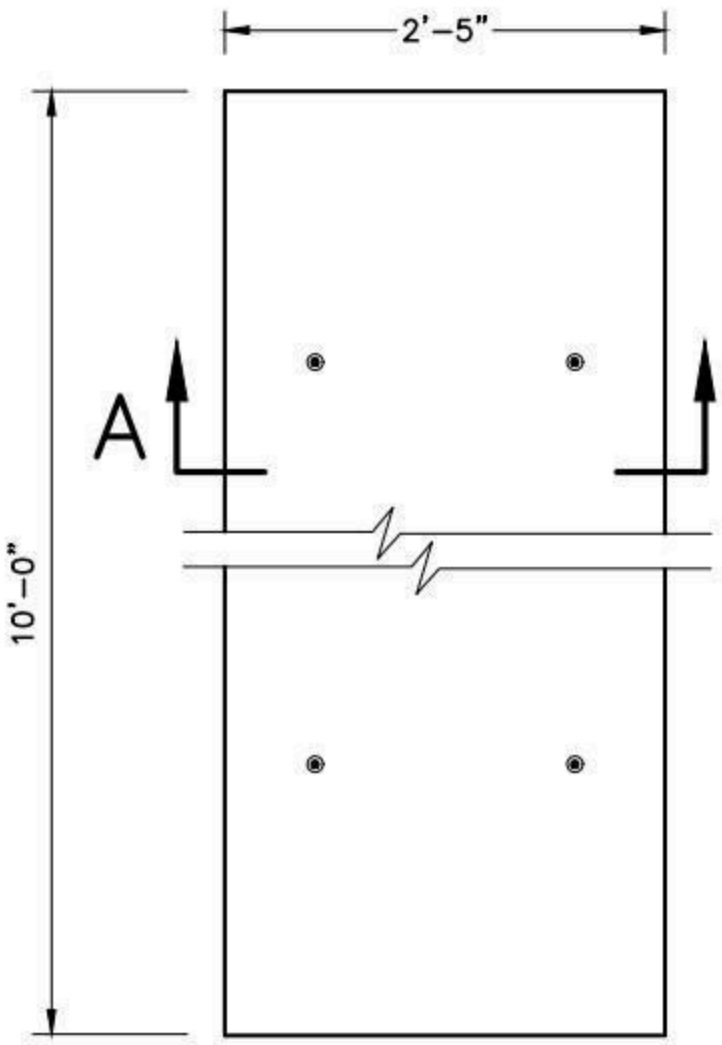

COVER PLAN

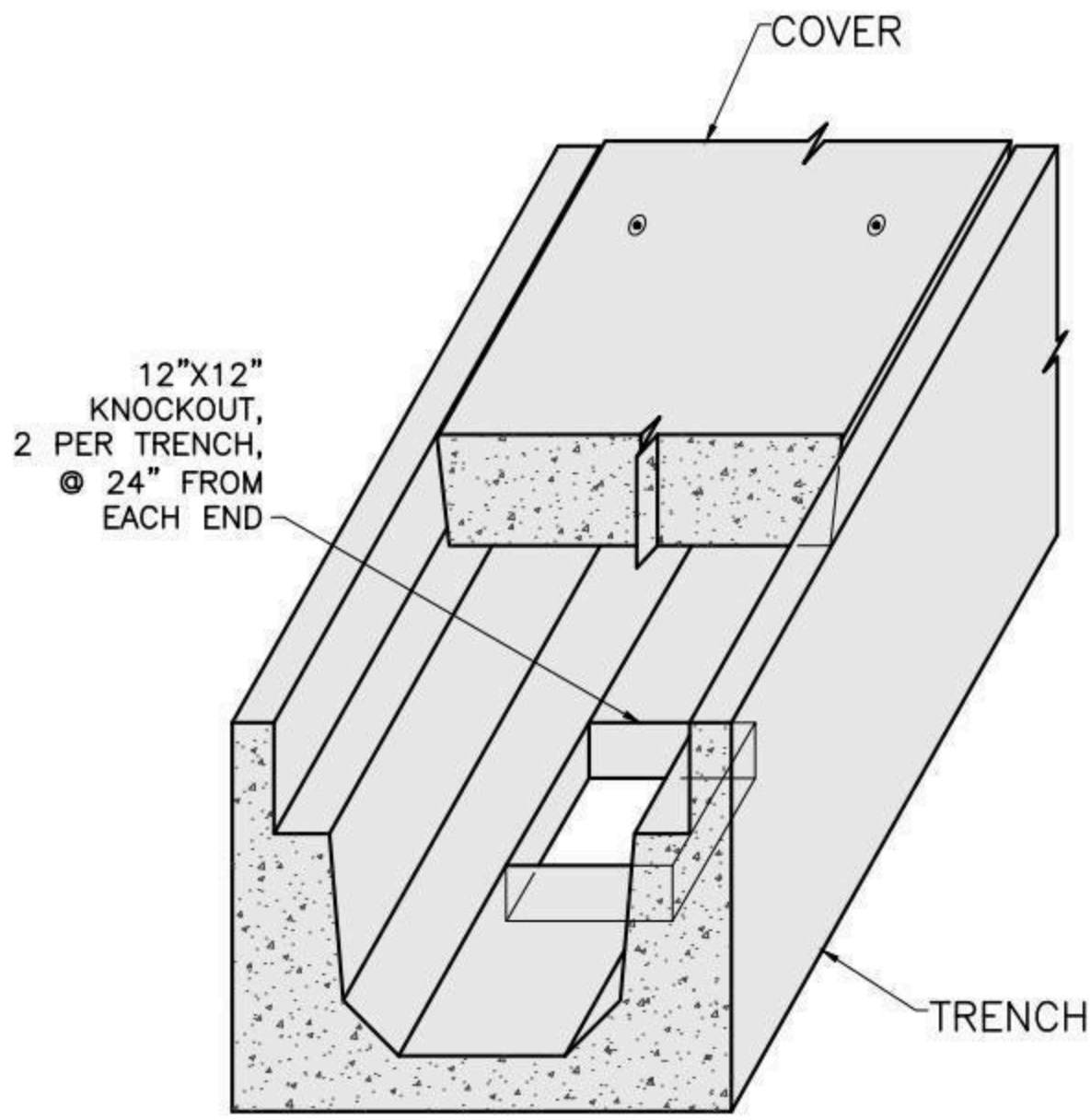

ISOMETRIC

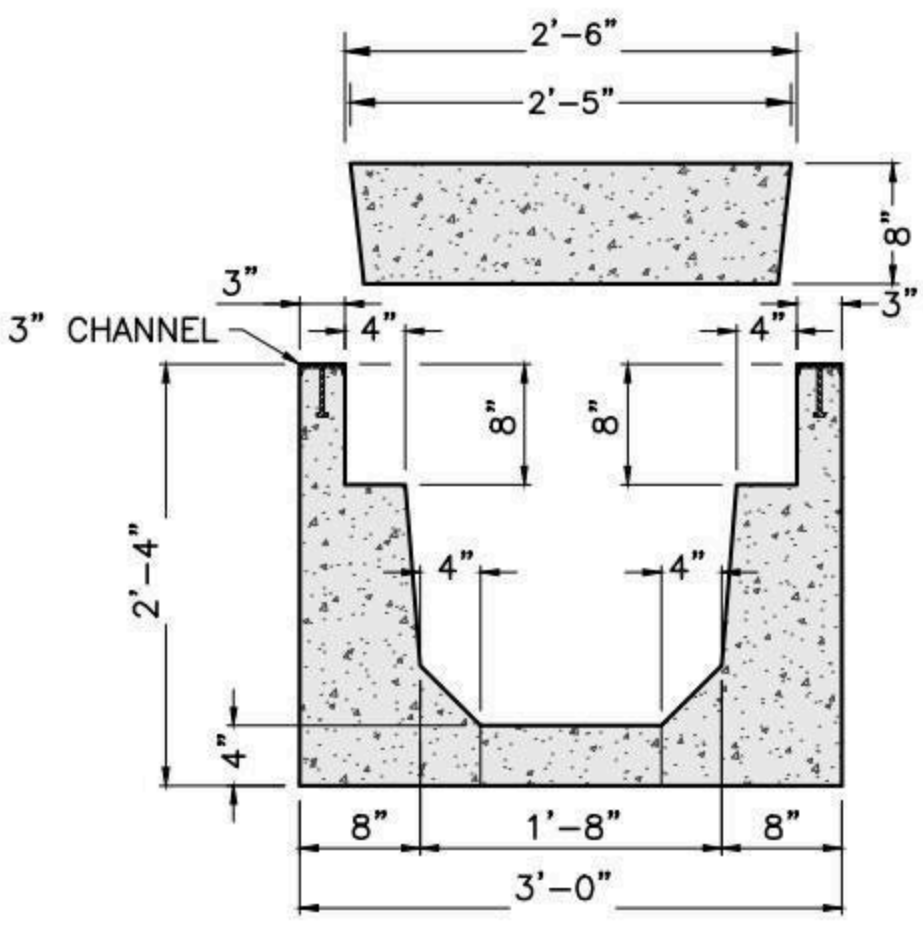

SECTION VIEW

NOTES:

1. CONCRETE: 5,000 PSI MINIMUM AFTER 28 DAYS.
2. DESIGN LOADING: AASHTO HS20-44.
3. STEEL REINFORCEMENT CONFORMS TO ASTM A615, GRADE 60.
4. MINIMUM STEEL COVER 1.5".
5. OTHER SIZES AVAILABLE UPON REQUEST.

SHEA PRODUCT ID: NSCT-20X16HD	FILE NAME: CT 20X16HD		
WEIGHT (LBS): 455/LF	DRAWN BY: L.P.	DATE: 6/6/2018	PAGE: I.D.2

NPCA CERTIFIED PLANT

773 Salem Street-Wilmington, MA | 153 Cranberry Hwy-Rochester, MA | 87 Haverhill Road-Amesbury, MA | 160 Old Turnpike Rd-Nottingham, NH

Specifications subject to change without notice

SHEA CONCRETE PRODUCTS
New England's Premier Precaster
800-696-7432 (SHEA)
www.sheaconcrete.com
MAILING ADDRESS: 87 HAVERHILL RD AMESBURY, MA 01913

CABLE TRENCH 24X15 MEDIUM DUTY

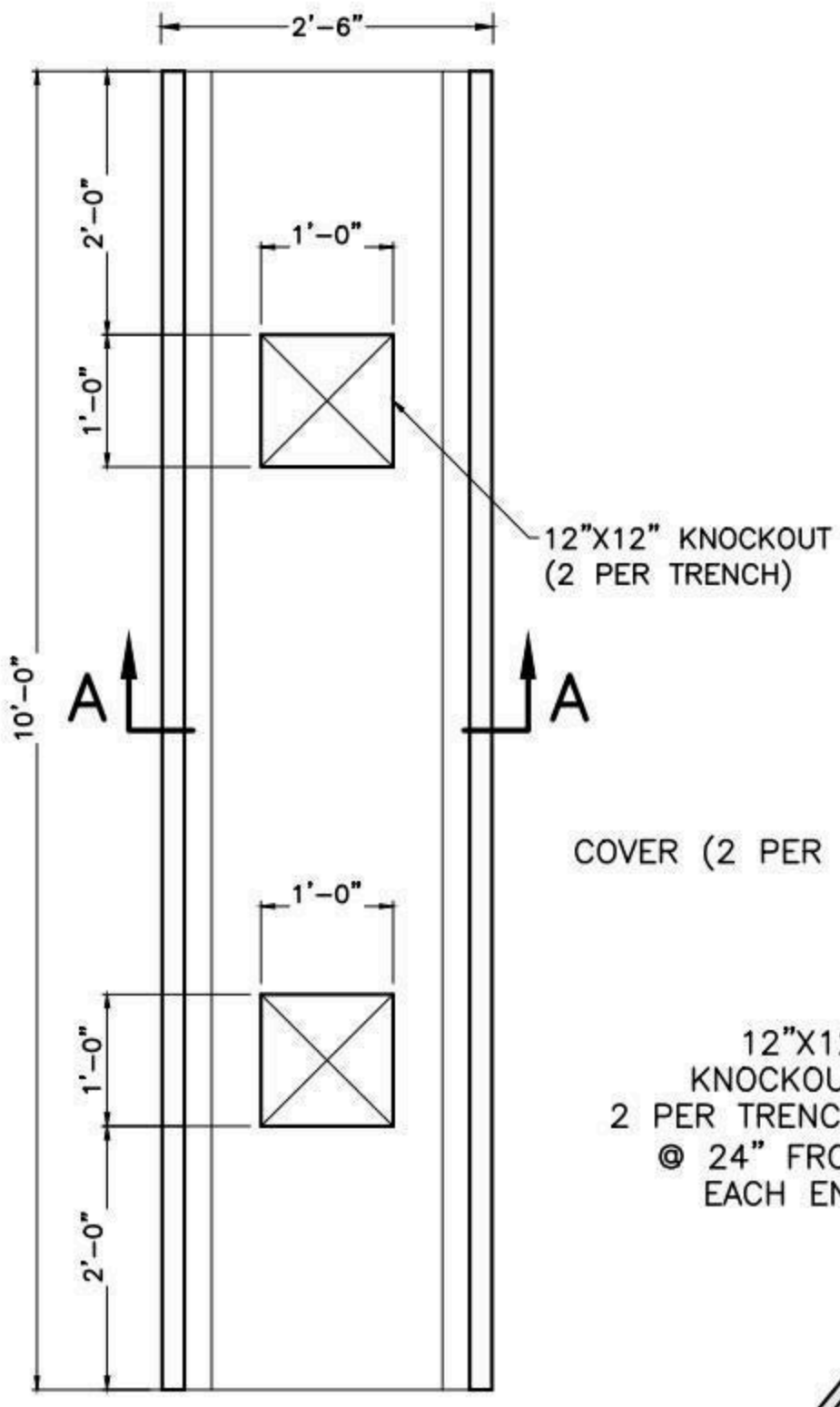

TRENCH PLAN

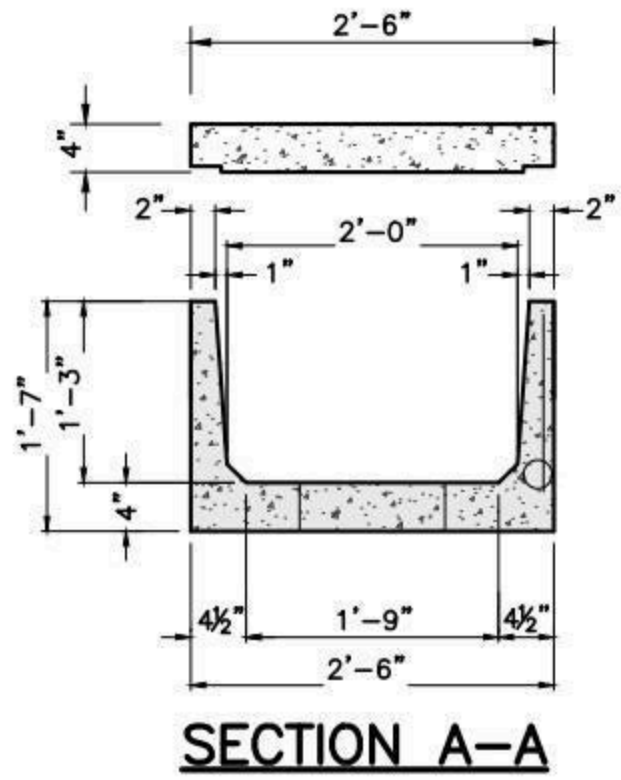

SECTION A-A

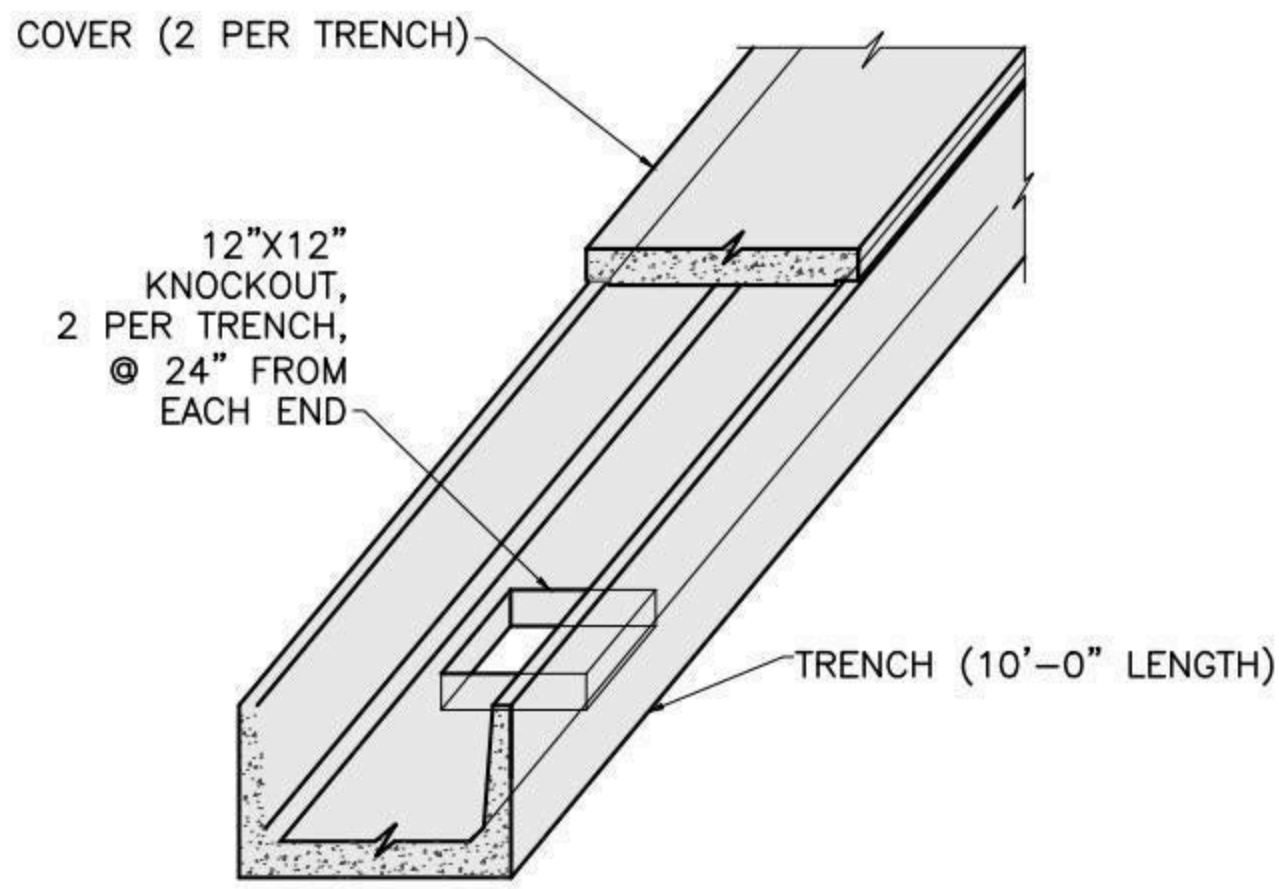

ISOMETRIC

NOTES:

1. CONCRETE: 5,000 PSI MINIMUM AFTER 28 DAYS.
2. STEEL REINFORCEMENT CONFORMS TO ASTM A615, GRADE 60.
3. MINIMUM STEEL COVER 1".
4. OTHER SIZES AVAILABLE UPON REQUEST.

SHEA PRODUCT ID: NSCT-24X15MD	FILE NAME: CT 24X15MD		
WEIGHT (LBS): 200/LF	DRAWN BY: L.P.	DATE: 6/6/2018	PAGE: I.D.3

NPCA CERTIFIED PLANT

773 Salem Street-Wilmington, MA | 153 Cranberry Hwy-Rochester, MA | 87 Haverhill Road-Amesbury, MA | 160 Old Turnpike Rd-Nottingham, NH

Specifications subject to change without notice

SHEA CONCRETE PRODUCTS
New England's Premier Precaster
800-696-7432 (SHEA)
www.sheaconcrete.com
MAILING ADDRESS: 87 HAVERHILL RD AMESBURY, MA 01913

CABLE TRENCH 30X15 MEDIUM DUTY

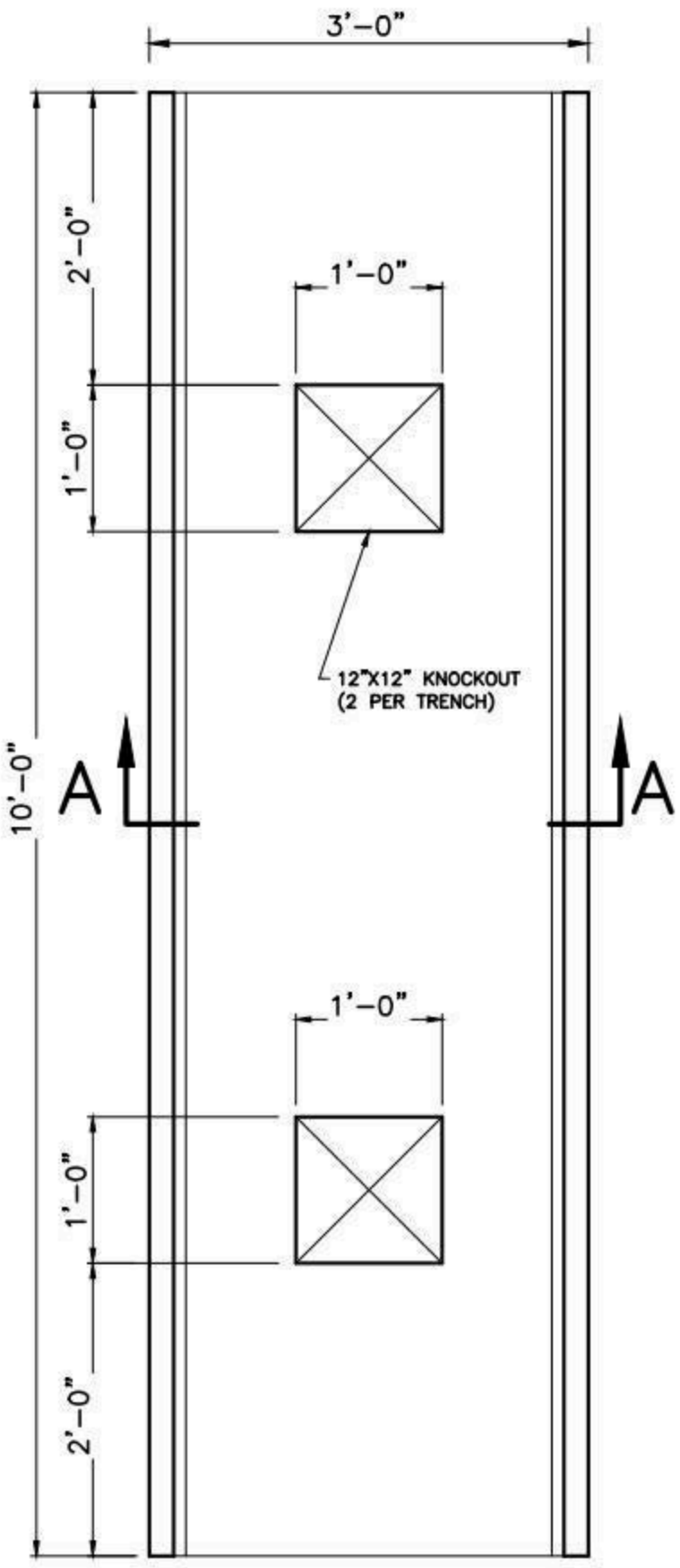

TRENCH PLAN

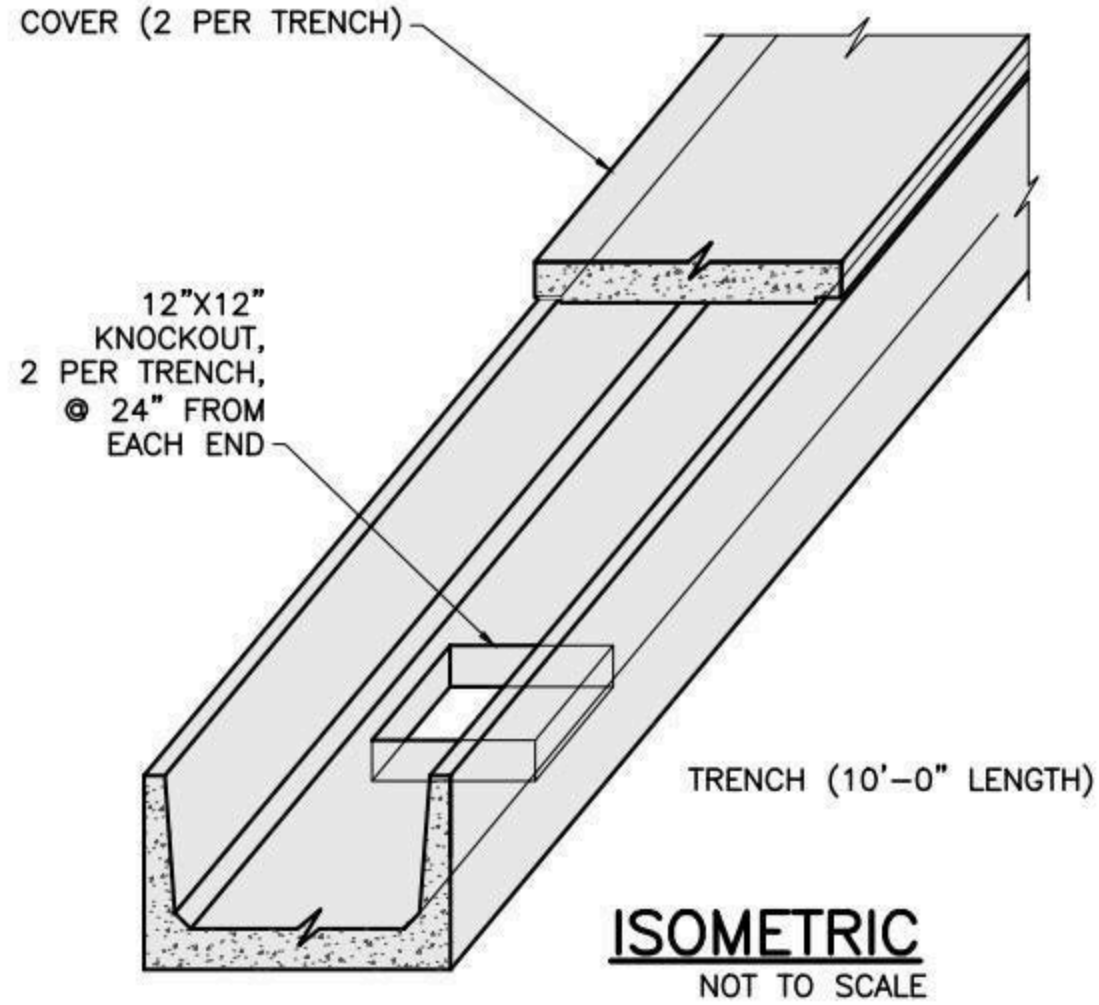

ISOMETRIC

NOT TO SCALE

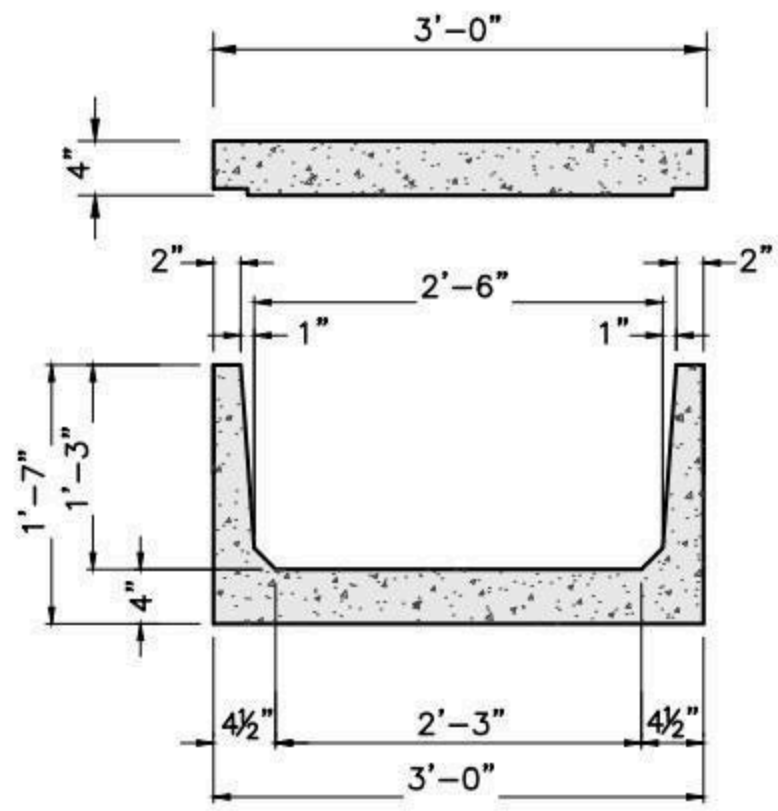

SECTION A-A

NOTES:

1. CONCRETE: 5,000 PSI MINIMUM AFTER 28 DAYS.
2. STEEL REINFORCEMENT CONFORMS TO ASTM A615, GRADE 60.
3. MINIMUM STEEL COVER 1".
4. OTHER SIZES AVAILABLE UPON REQUEST.

SHEA PRODUCT ID: NSCT-30X15MD	FILE NAME: CT 30X15MD		
WEIGHT (LBS): 225/LF	DRAWN BY: L.P.	DATE: 6/6/2018	PAGE: I.D.4

NPCA CERTIFIED PLANT

Specifications subject to change without notice

SHEA CONCRETE PRODUCTS
New England's Premier Precaster
800-696-7432 (SHEA)
www.sheaconcrete.com
MAILING ADDRESS: 87 HAVERHILL RD AMESBURY, MA 01913

CABLE TRENCH 30X16 HEAVY DUTY WITH COVER

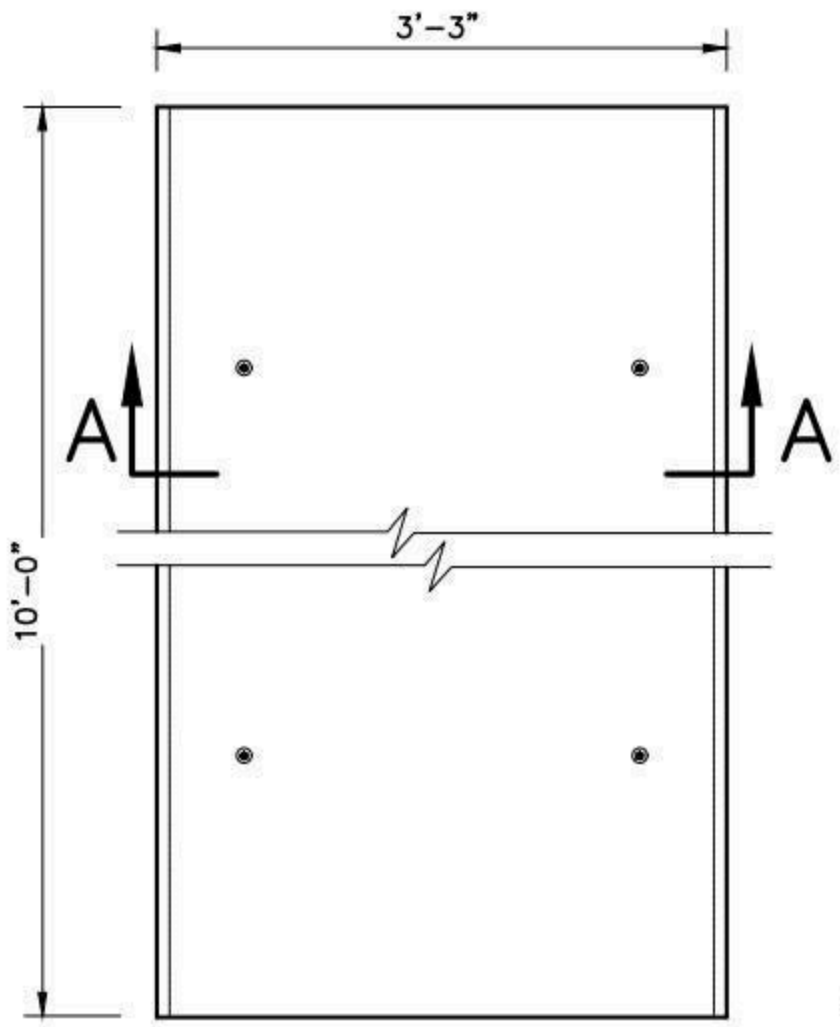

COVER PLAN

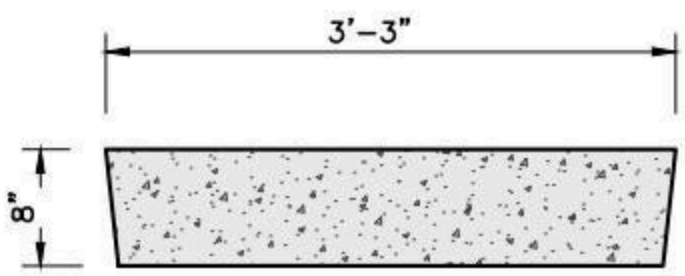

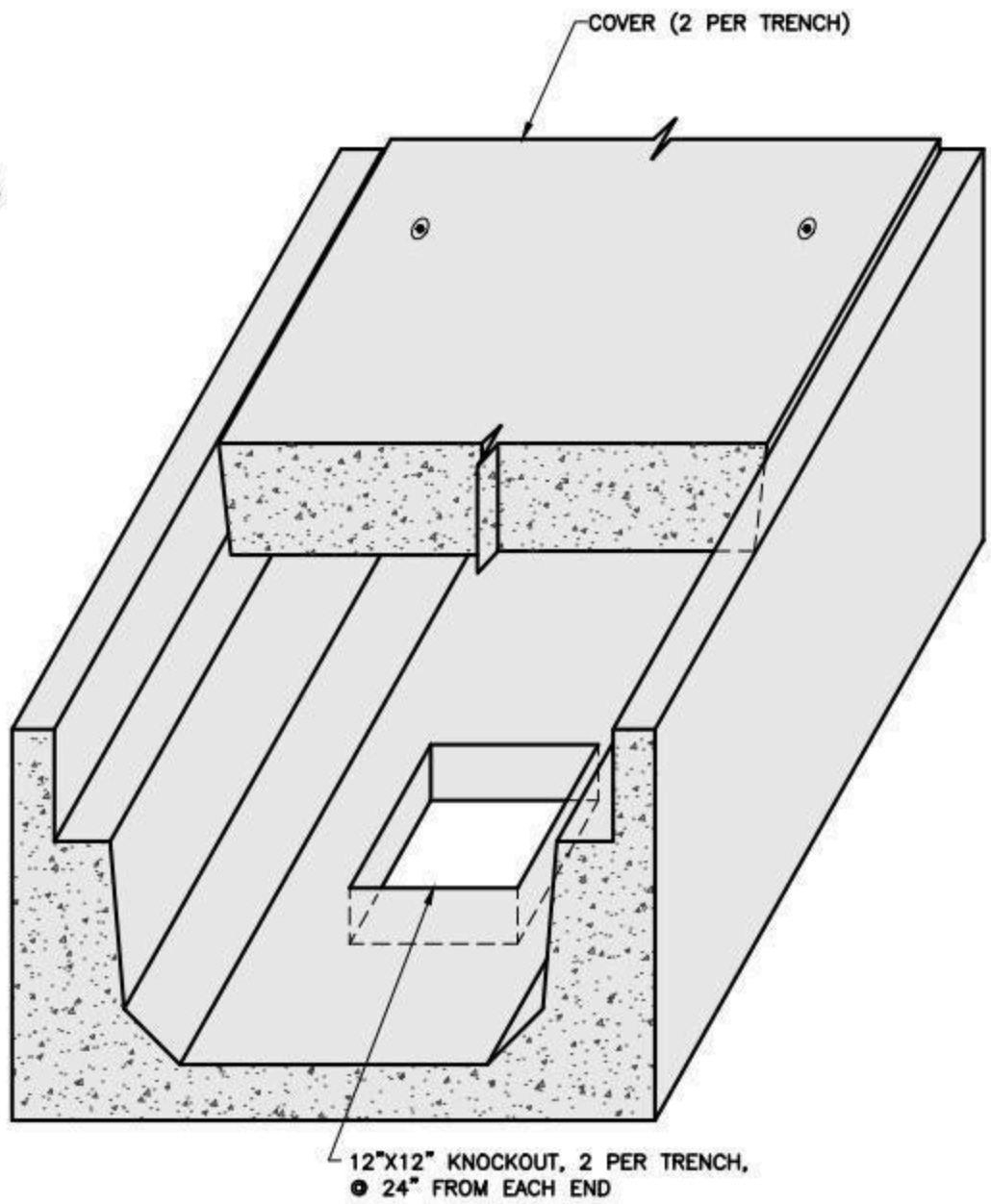

ISOMETRIC

NOT TO SCALE

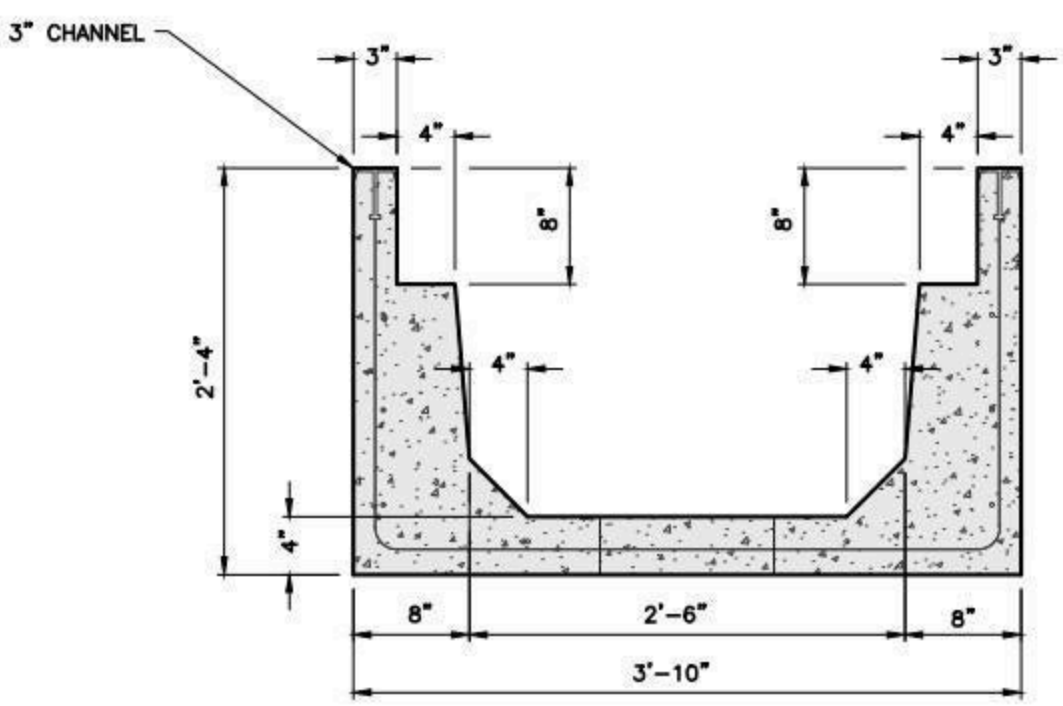

SECTION A-A

NOTES:

1. CONCRETE: 5,000 PSI MINIMUM AFTER 28 DAYS.
2. DESIGN LOADING: AASHTO HS20-44.
3. STEEL REINFORCEMENT CONFORMS TO ASTM A615, GRADE 60.
4. MINIMUM STEEL COVER 1.5".
5. OTHER SIZES AVAILABLE UPON REQUEST.

SHEA PRODUCT ID: NSCT-30X16HD	FILE NAME: CT 30X16MD		
WEIGHT (LBS): 805/LF	DRAWN BY: L.P.	DATE: 6/6/2018	PAGE: I.D.5

NPCA CERTIFIED PLANT

773 Salem Street-Wilmington, MA | 153 Cranberry Hwy-Rochester, MA | 87 Haverhill Road-Amesbury, MA | 160 Old Turnpike Rd-Nottingham, NH

Specifications subject to change without notice

SHEA CONCRETE PRODUCTS
New England's Premier Precaster
800-696-7432 (SHEA)
www.sheaconcrete.com
MAILING ADDRESS: 87 HAVERHILL RD AMESBURY, MA 01913

STANDARD CABLE TRENCH
2'-2" X 3' X 8'

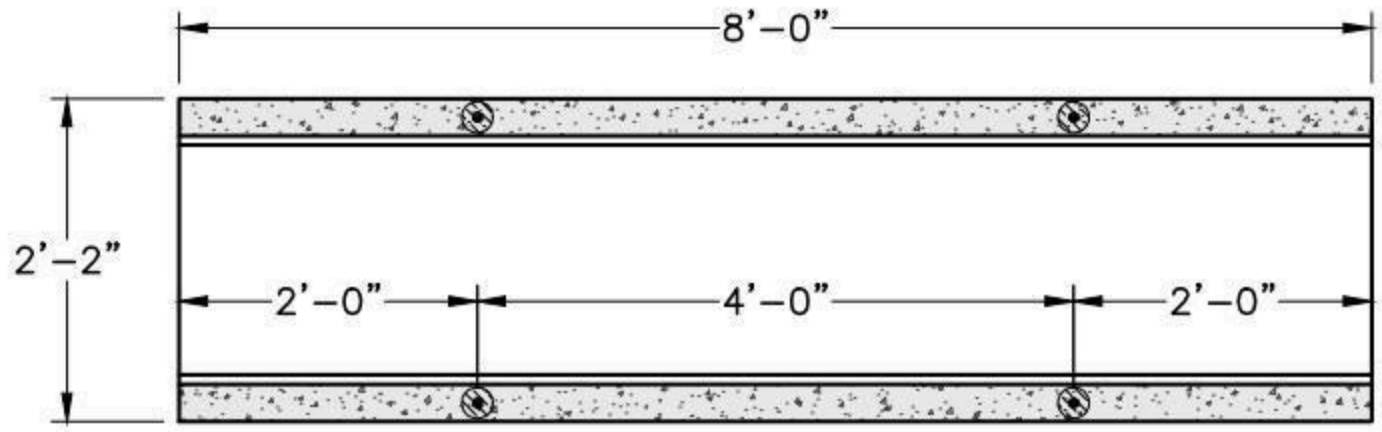

PLAN VIEW

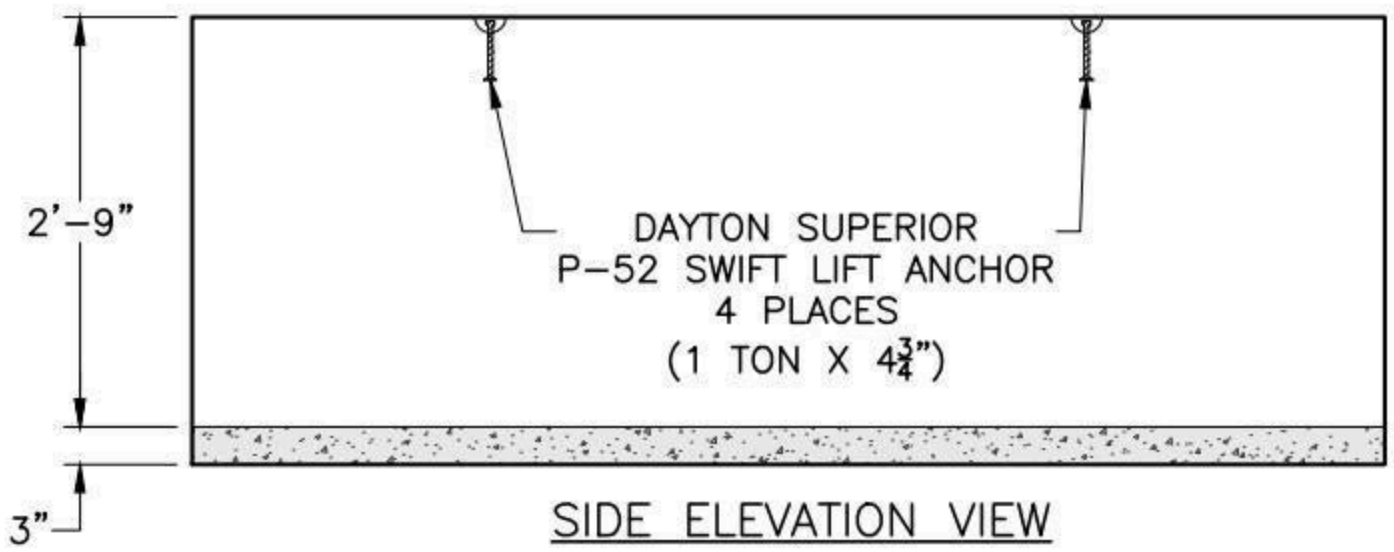

SIDE ELEVATION VIEW

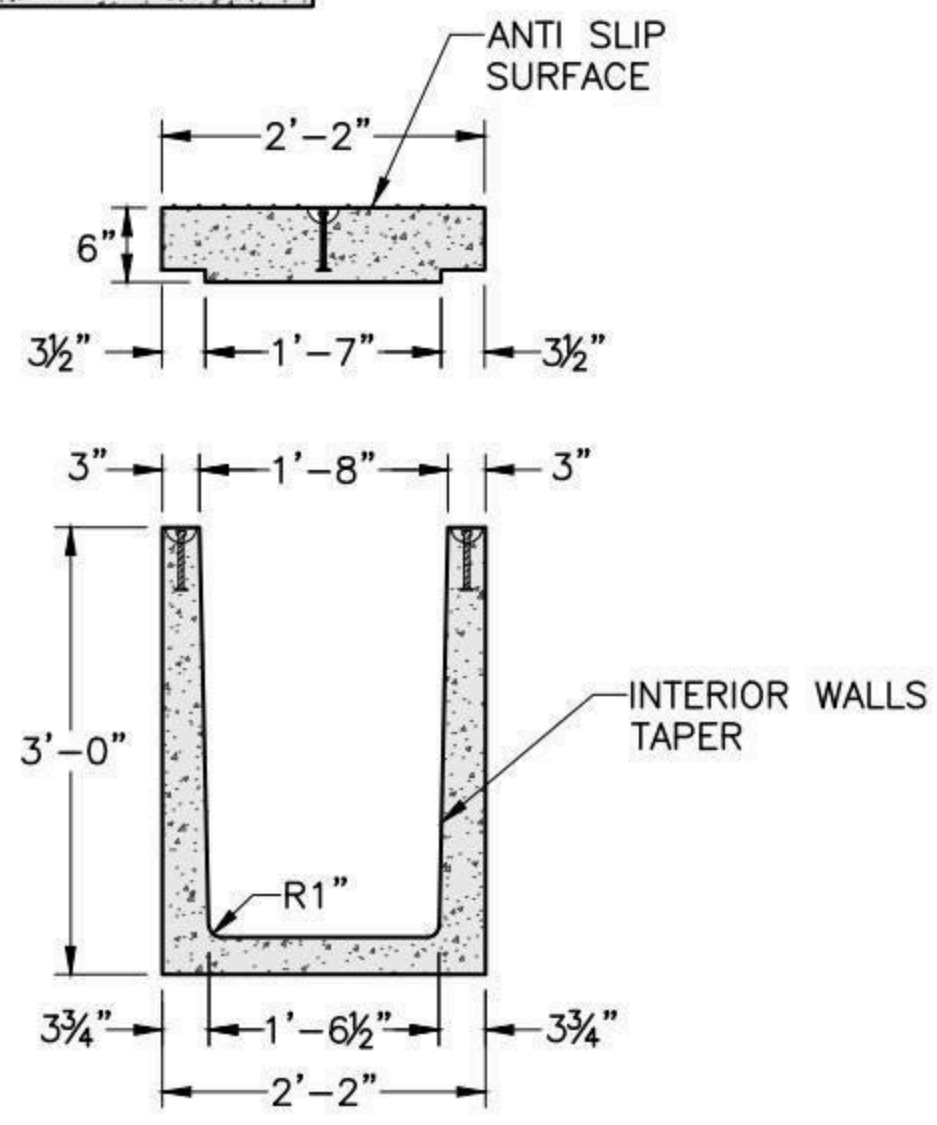

END ELEVATION VIEW

TRENCH	2,500#
COVER	1,250#

NOTES

1. MINIMUM 28 DAY COMPRESSIVE STRENGTH: FC'= 5,000 PSI
2. REINFORCING STEEL: ASTM A615 GRADE 60 BLACK DEFORMED BARS
3. CONCRETE COVER ON REINFORCING STEEL: 1¼" MINIMUM, UNLESS NOTED OTHERWISE
4. PRECAST STRUCTURE SHALL SUPPORT ITS OWN WEIGHT PLUS THE FOLLOWING:
5. LIVE LOAD ON TOP SLAB: H-20 VEHICULAR LOADING
6. EST. WEIGHT: 2,500 LBS

SHEA PRODUCT ID: EV-TRN-WSE	FILE NAME: CT 26X36HD		
WEIGHT (LBS): 2,500#	DRAWN BY: ARO	DATE: 6/6/2018	PAGE: I.D.6

NPCA CERTIFIED PLANT

Specifications subject to change without notice

SHEA CONCRETE PRODUCTS
New England's Premier Precaster
800-696-7432 (SHEA)
www.sheaconcrete.com
MAILING ADDRESS: 87 HAVERHILL RD AMESBURY, MA 01913

THRUST BLOCKS

(2) RECESSED LIFTING HANDLES

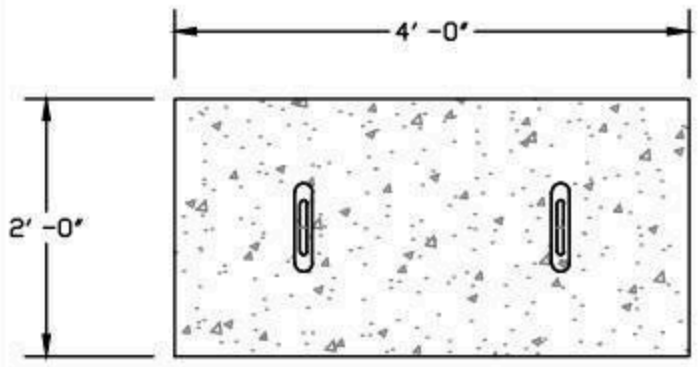

PLAN VIEW

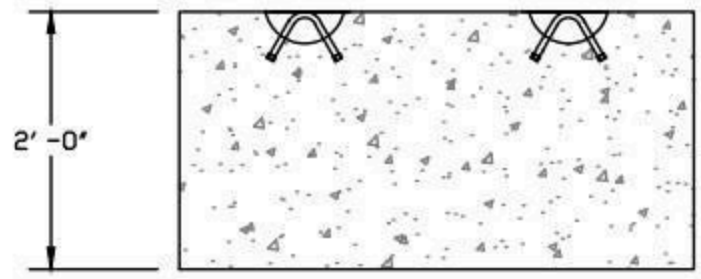

FRONT VIEW

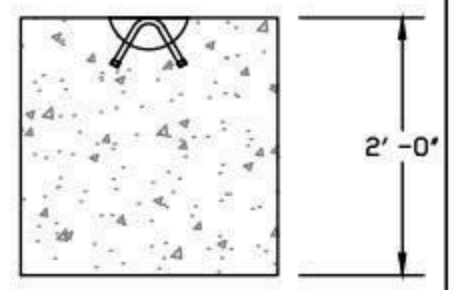

SIDE VIEW

DIMS	ITEM NO	WEIGHT
2'x2'x4'	TB2X2X4	2400#

(1) RECESSED LIFTING HANDLE

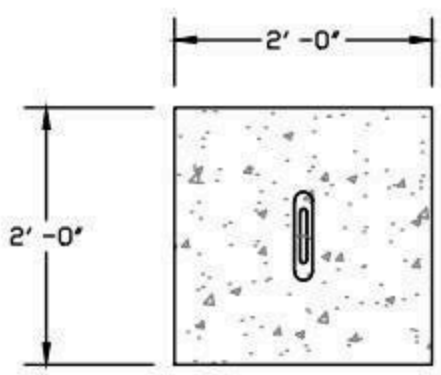

PLAN VIEW

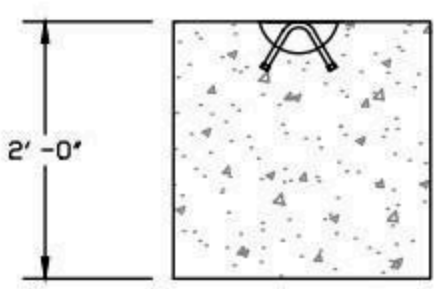

FRONT VIEW

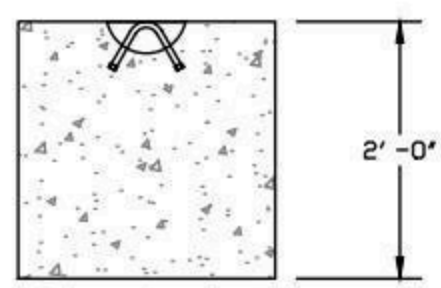

SIDE VIEW

DIMS	ITEM NO	WEIGHT
2'x2'x2'	TB2X2X2	1200#

NOTES:

1. CONCRETE: 3,000 PSI MINIMUM AFTER 28 DAYS.

SHEA PRODUCT ID: SEE TABLE	FILE NAME: Thrust Blocks		
WEIGHT (LBS): SEE TABLE	DRAWN BY: ARO	DATE: 6/7/2018	PAGE: I.E.1-1

NPCA CERTIFIED PLANT

Specifications subject to change without notice

SHEA CONCRETE PRODUCTS
New England's Premier Precaster
800-696-7432 (SHEA)
www.sheaconcrete.com
MAILING ADDRESS: 87 HAVERHILL RD AMESBURY, MA 01913

PROPANE AND GENERATOR PADS

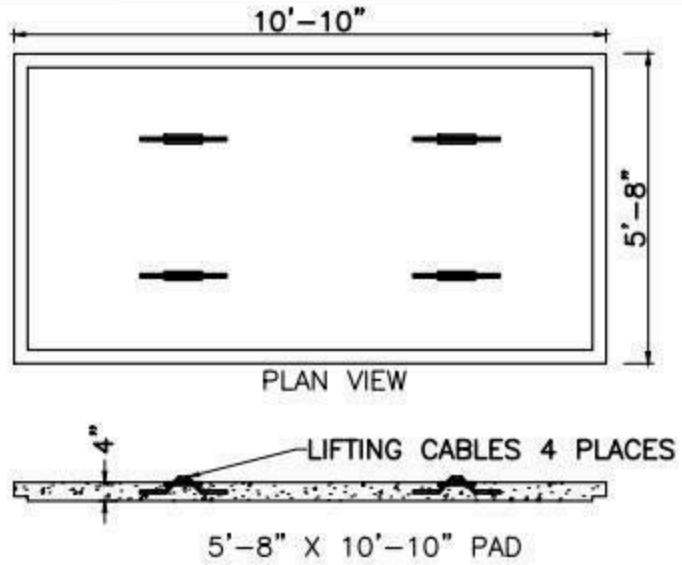

5'-8" X 10'-10" PAD

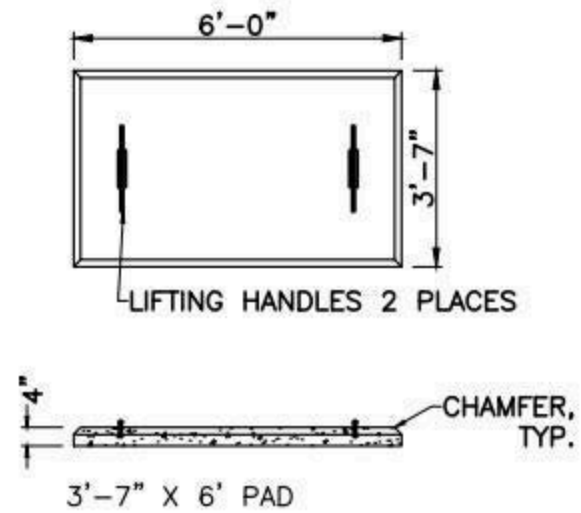

3'-7" X 6' PAD

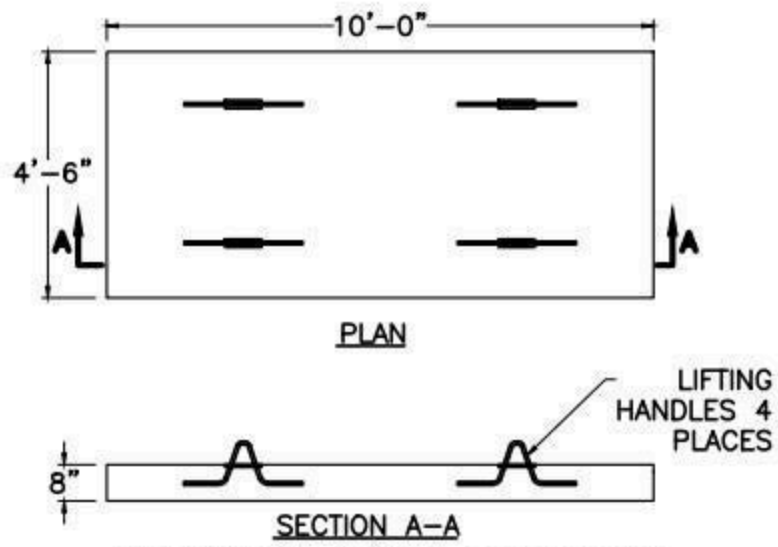

PROPANE PAD 500 GAL BELOW GRADE

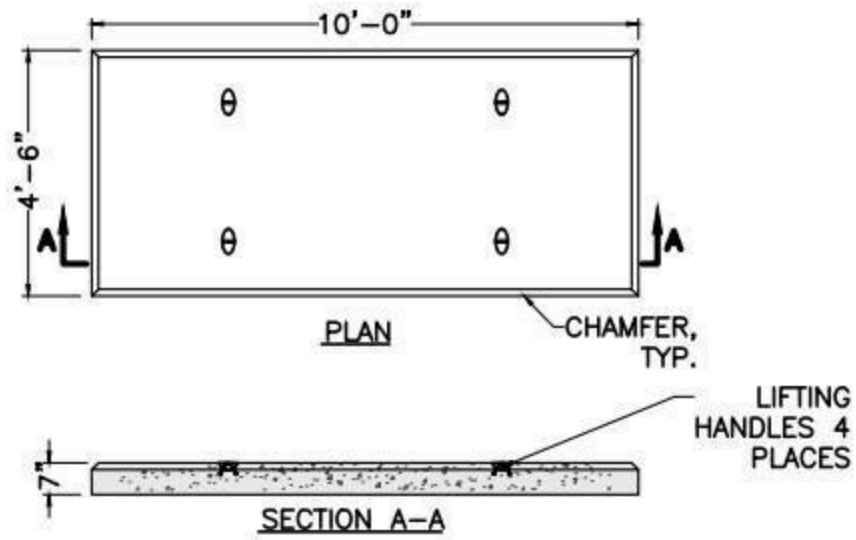

PROPANE PAD 500 GAL ABOVE GRADE

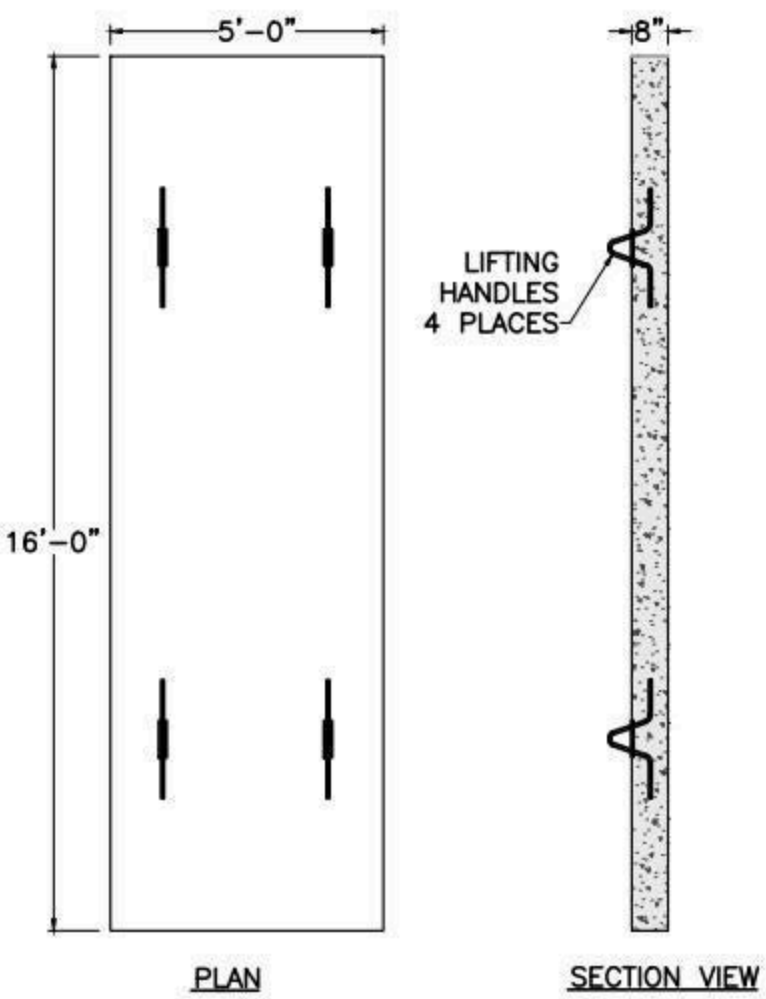

PROPANE PAD 1000 GAL BELOW GRADE

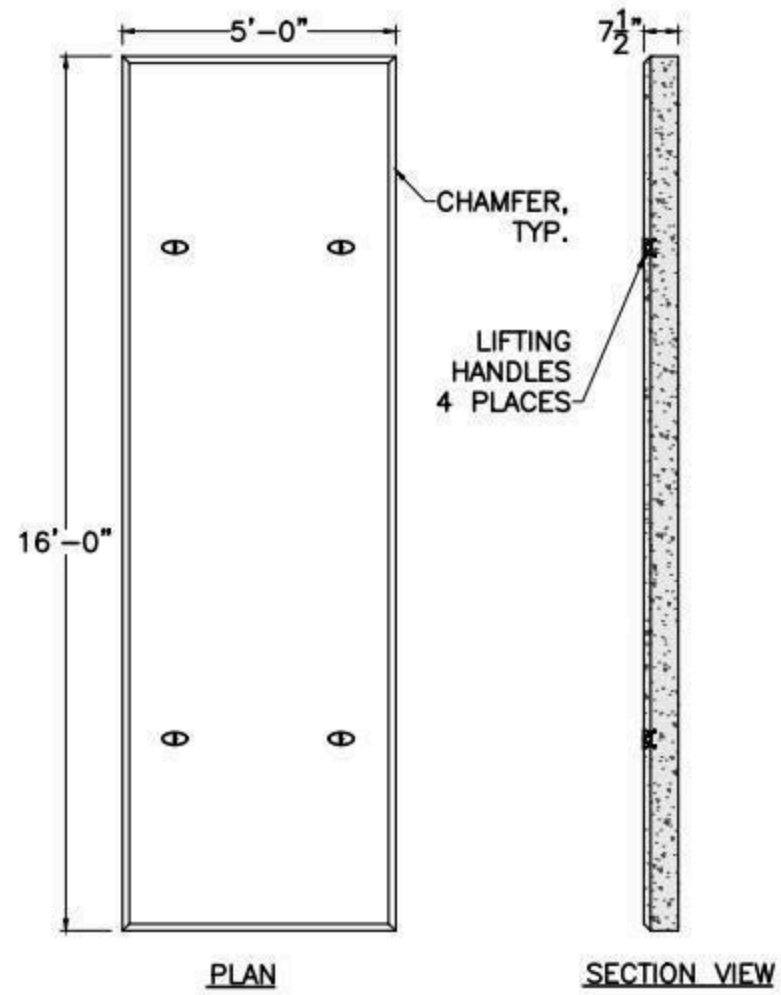

PROPANE PAD 1000 GAL ABOVE GRADE

SHEA PRODUCT ID:	FILE NAME: Propane Pads.dwg		
WEIGHT (LBS):	DRAWN BY: ARO	DATE: 6/7/2018	PAGE: I.E.2-1

NPCA CERTIFIED PLANT

Specifications subject to change without notice

SHEA CONCRETE PRODUCTS
New England's Premier Precaster
800-696-7432 (SHEA)
www.sheaconcrete.com
MAILING ADDRESS: 87 HAVERHILL RD AMESBURY, MA 01913

EVERSOURCE-MA STANCHIONS

2-POSITION

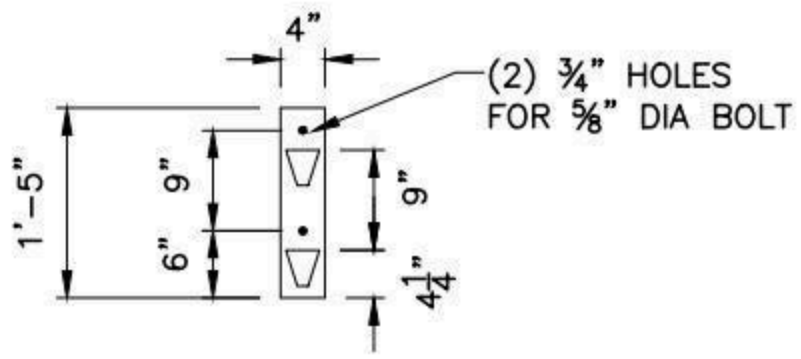

FRONT VIEW

3-POSITION

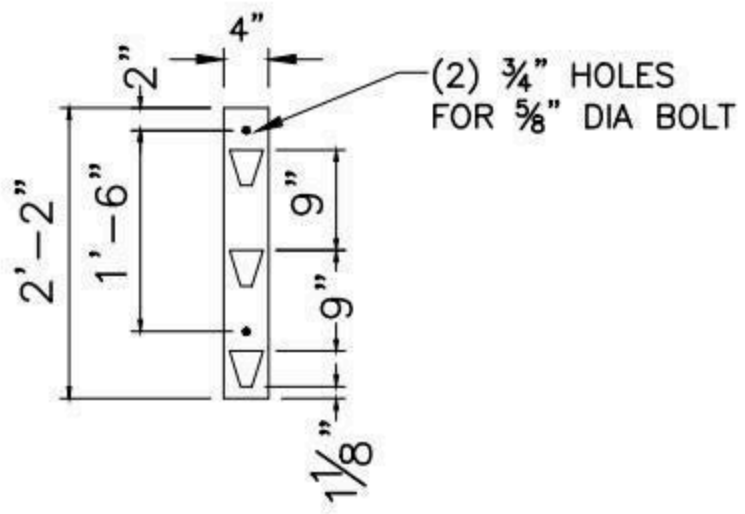

FRONT VIEW

4-POSITION

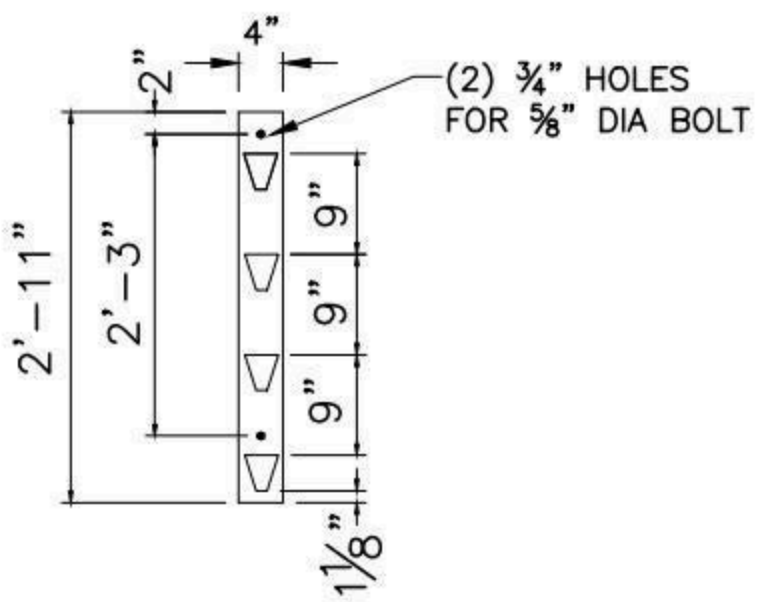

FRONT VIEW

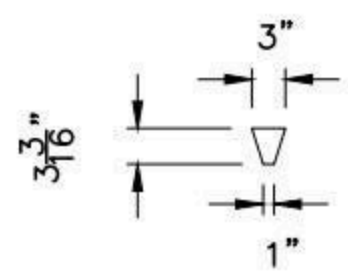

SLOT DETAIL

NOTES:

1. STANCHIONS ARE MADE FROM GALVANIZED 4" CHANNEL WITH 1½" LEGS.
2. * REPLACE X WITH NUMBER OF POSITIONS IN SHEA PRODUCT ID.

SHEA PRODUCT ID: NSSTNXP*	FILE NAME: ES-MA GALVANIZED STANCHIONS			NPCA CERTIFIED PLANT
WEIGHT (LBS): N/A	DRAWN BY: L.P.	DATE: 8/21/2017	PAGE: II.A.1	

Specifications subject to change without notice

SHEA CONCRETE PRODUCTS
New England's Premier Precaster
800-696-7432 (SHEA)
www.sheaconcrete.com
MAILING ADDRESS: 87 HAVERHILL RD AMESBURY, MA 01913

EVERSOURCE-MA MANHOLE
M1201 4' W X 4' L X 4' H

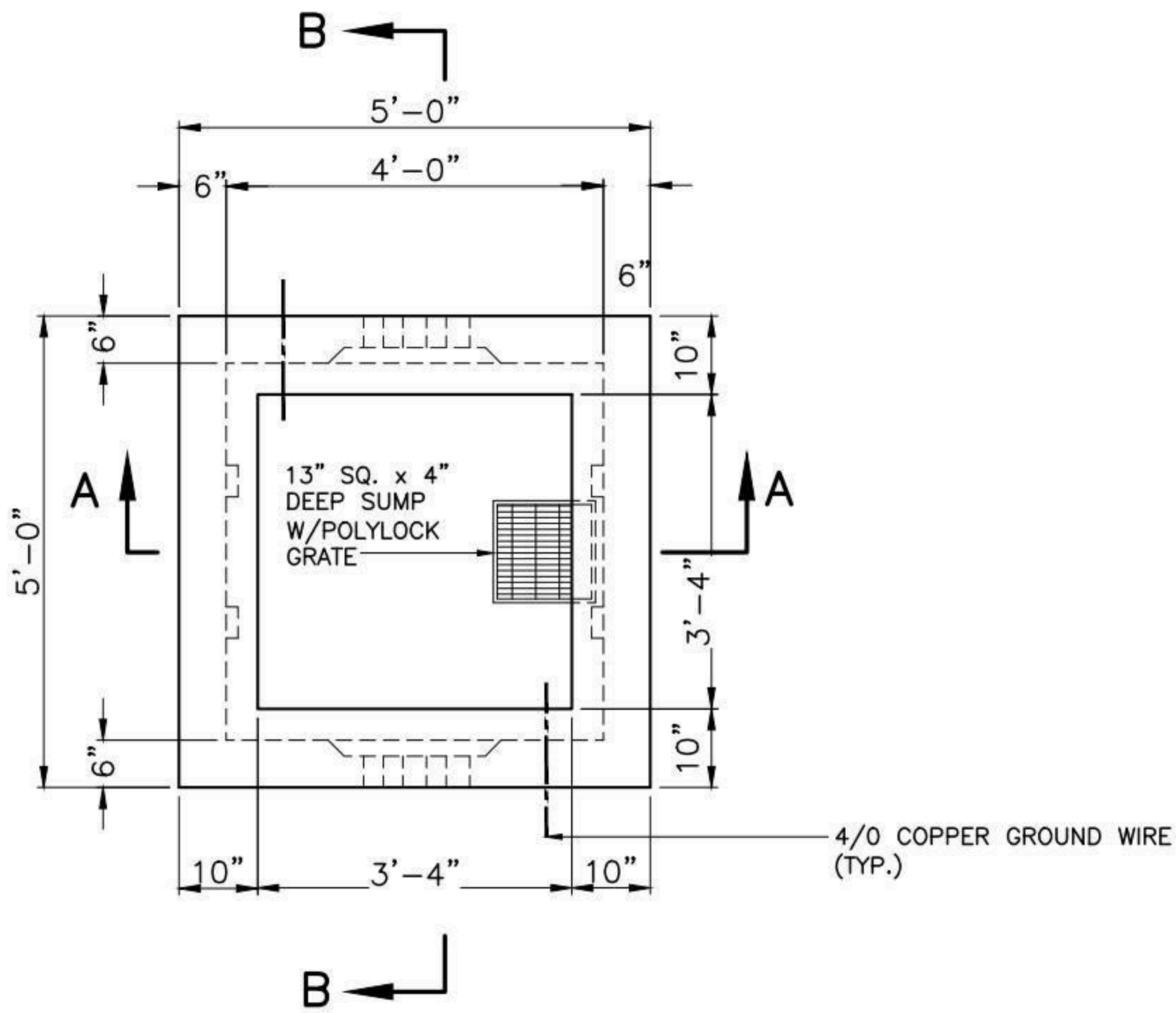

PLAN

NOTES:

1. CONCRETE: 5,000 PSI MINIMUM AFTER 28 DAYS.
2. DESIGN LOADING: AASHTO HS20-44, 0 TO 5 FEET COVER.
3. DESIGN SPECIFICATIONS – ACI 318 & AASHTO LOAD FACTOR DESIGN METHOD.
4. STEEL REINFORCEMENT CONFORMS TO ASTM A615, GRADE 60. MINIMUM STEEL COVER 1 ½".
5. ALL TERMINATORS SHALL HAVE BELL ENDS FLUSH WITH THE INSIDE WALL.
6. CONSTRUCTION JOINT SHALL BE SEALED WITH 1"ø BUTYL RUBBER OR APPROVED EQUAL.
7. RACKING/STANCHIONS SOLD SEPARATELY.

SHEA PRODUCT ID: NSM1201	FILE NAME: ES-MA M1201				NPCA CERTIFIED PLANT
WEIGHT (LBS): 6300	DRAWN BY: L.P.	DATE: 8/21/2017	PAGE: II.B.1-1		

Specifications subject to change without notice

SHEA CONCRETE PRODUCTS
New England's Premier Precaster
800-696-7432 (SHEA)
www.sheaconcrete.com
MAILING ADDRESS: 87 HAVERHILL RD AMESBURY, MA 01913

EVERSOURCE-MA MANHOLE
M1201 4' W X 4' L X 4' H

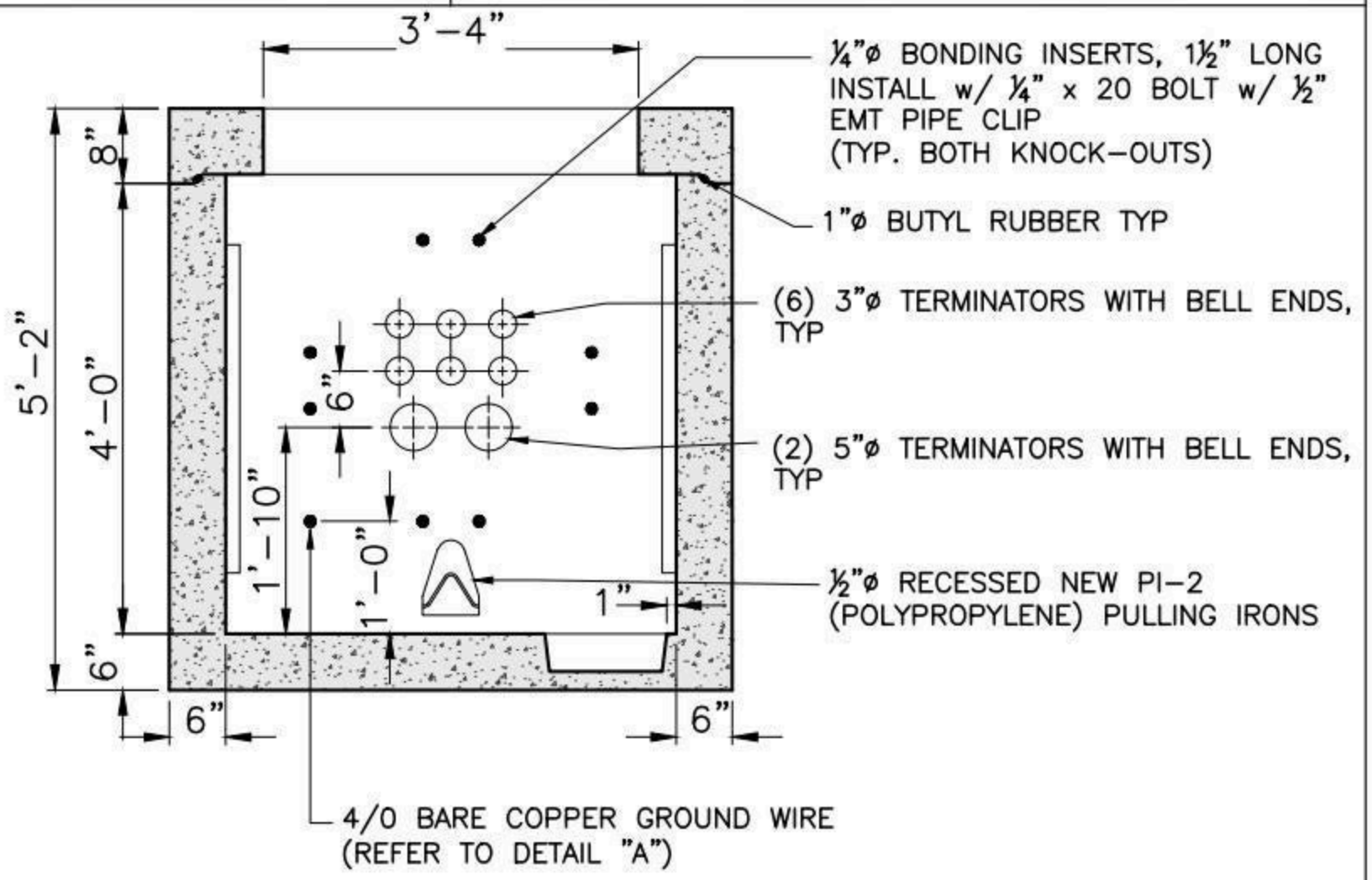

SECTION A-A

OPPOSITE WALLS ARE MIRROR IMAGES.

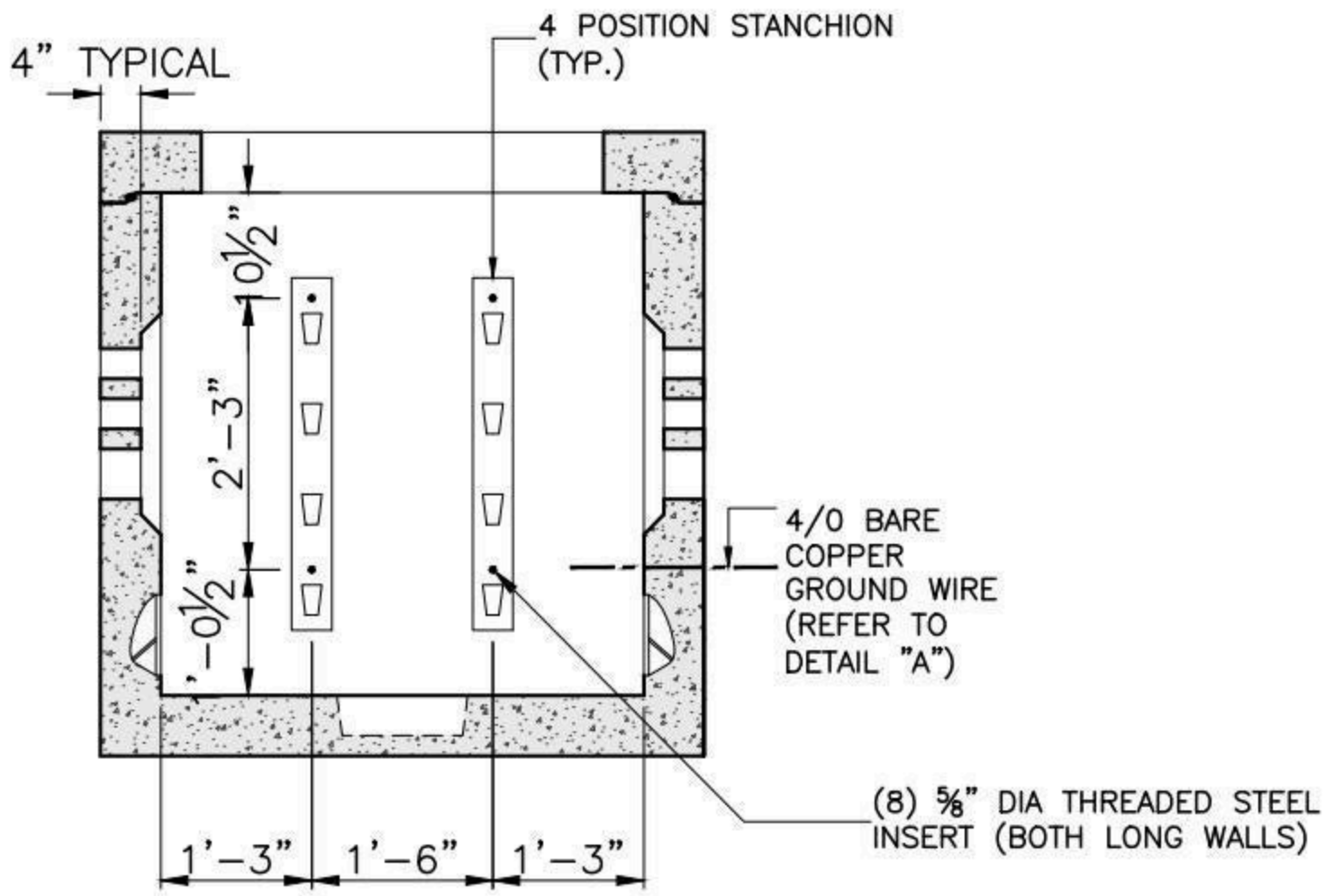

SECTION B-B

OPPOSITE WALLS ARE MIRROR IMAGES.

SHEA PRODUCT ID: NSM1201	FILE NAME: ES-MA M1201				
WEIGHT (LBS): 6300	DRAWN BY: L.P.	DATE: 8/21/2017	PAGE: II.B.1-2		

Specifications subject to change without notice

SHEA CONCRETE PRODUCTS
New England's Premier Precaster
800-696-7432 (SHEA)
www.sheaconcrete.com
MAILING ADDRESS: 87 HAVERHILL RD AMESBURY, MA 01913

EVERSOURCE-MA MANHOLE
M1202 4' W X 6' L X 6' H

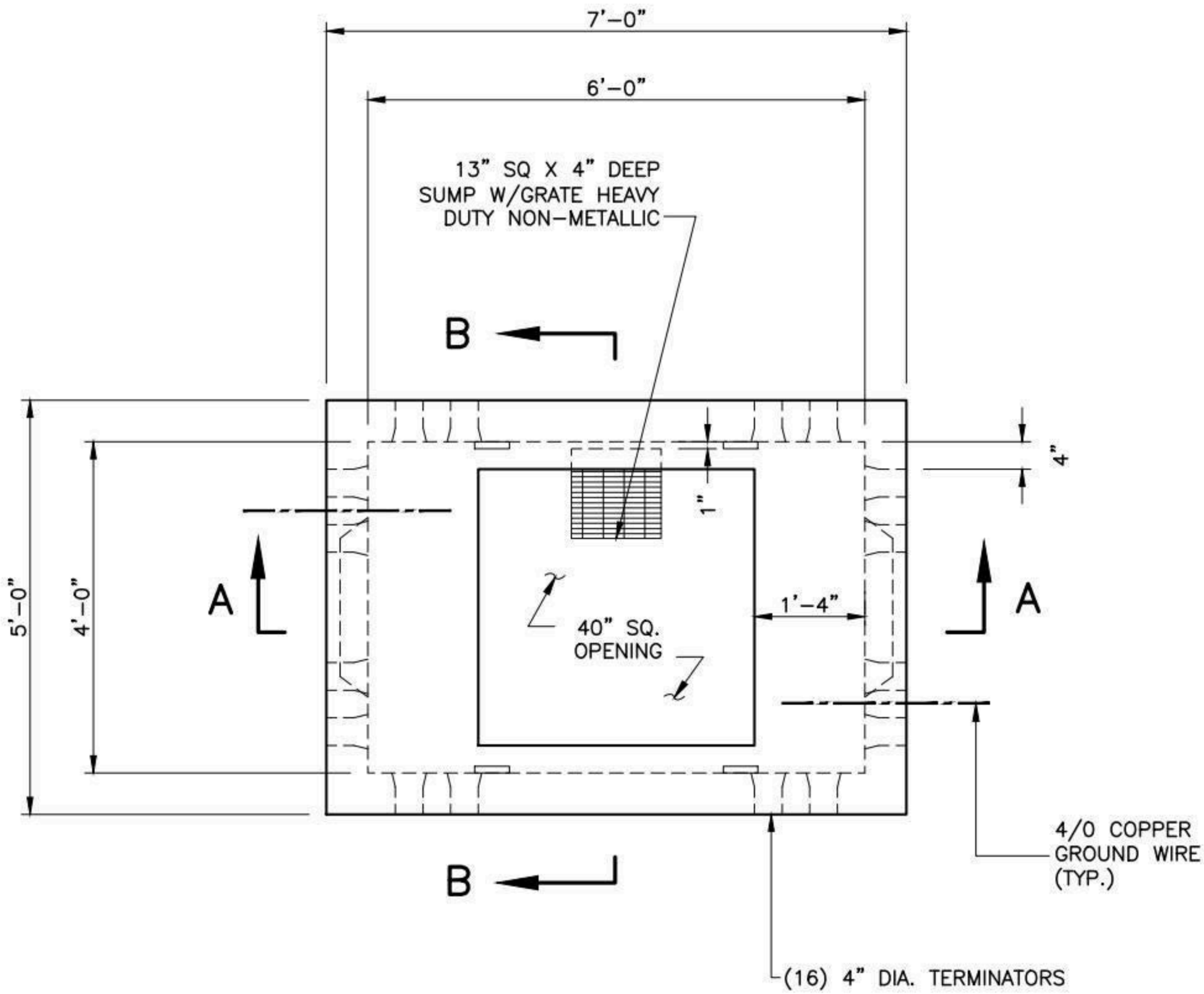

PLAN

NOTES:

1. CONCRETE: 5,000 PSI MINIMUM AFTER 28 DAYS.
2. DESIGN LOADING: AASHTO HS20-44, 0 TO 5 FEET COVER.
3. DESIGN SPECIFICATIONS – ACI 318 & AASHTO LOAD FACTOR DESIGN METHOD.
4. STEEL REINFORCEMENT CONFORMS TO ASTM A615, GRADE 60. MINIMUM STEEL COVER 1 ½".
5. ALL TERMINATORS SHALL HAVE BELL ENDS FLUSH WITH THE INSIDE WALL.
6. CONSTRUCTION JOINT SHALL BE SEALED WITH 1"ø BUTYL RUBBER OR APPROVED EQUAL.
7. RACKING/STANCHIONS SOLD SEPARATELY.

SHEA PRODUCT ID: NSM1202	FILE NAME: ES-MA M1202			NPCA CERTIFIED PLANT
WEIGHT (LBS): 14600	DRAWN BY: L.P.	DATE: 8/21/2017	PAGE: II.B.2-1	

Specifications subject to change without notice

SHEA CONCRETE PRODUCTS
New England's Premier Precaster
800-696-7432 (SHEA)
www.sheaconcrete.com
MAILING ADDRESS: 87 HAVERHILL RD AMESBURY, MA 01913

EVERSOURCE-MA MANHOLE
M1202 4' W X 6' L X 6' H

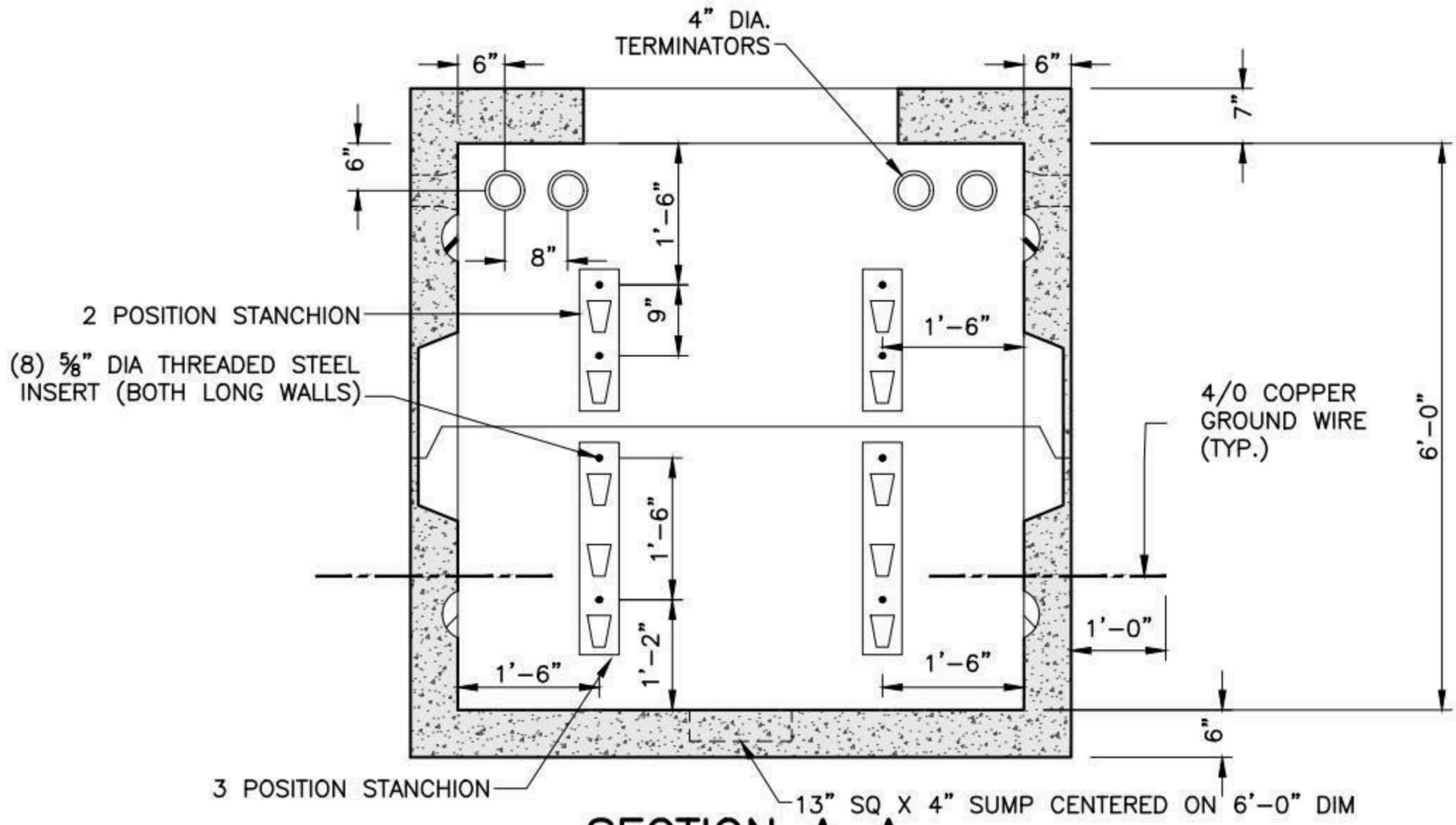

SECTION A-A

OPPOSITE WALLS ARE MIRROR IMAGES.

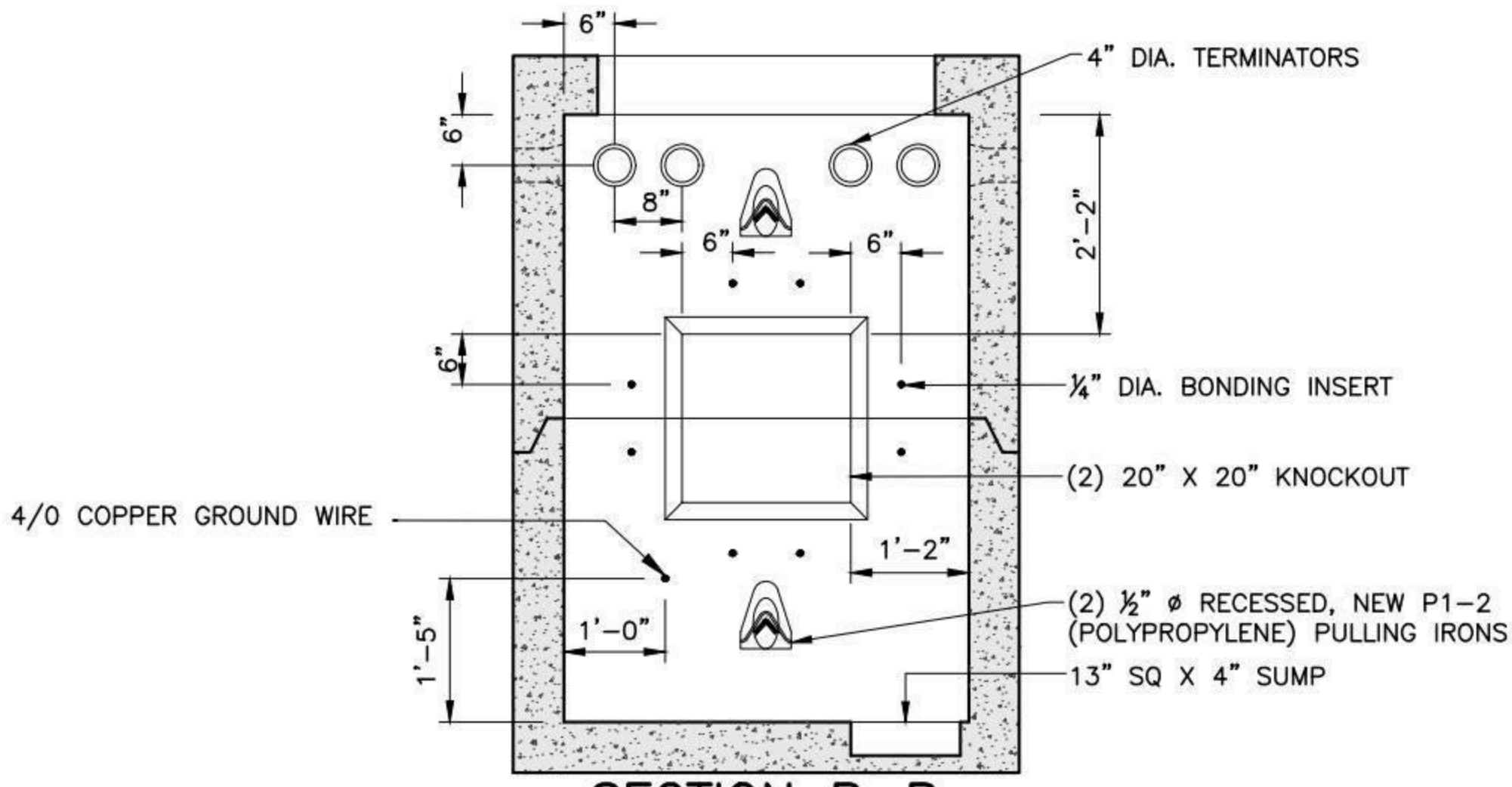

SECTION B-B

OPPOSITE WALLS ARE MIRROR IMAGES.

SHEA PRODUCT ID: NSM1202	FILE NAME: ES-MA M1202			
WEIGHT (LBS): 14600	DRAWN BY: L.P.	DATE: 8/21/2017	PAGE: II.B.2-2	NPCA CERTIFIED PLANT

773 Salem Street-Wilmington, MA | 153 Cranberry Hwy-Rochester, MA | 87 Haverhill Road-Amesbury, MA | 160 Old Turnpike Rd-Nottingham, NH

Specifications subject to change without notice

SHEA CONCRETE PRODUCTS
New England's Premier Precaster
800-696-7432 (SHEA)
www.sheaconcrete.com
MAILING ADDRESS: 87 HAVERHILL RD AMESBURY, MA 01913

EVERSOURCE-MA MANHOLE
M1203 6' W X 10' L X 6' H

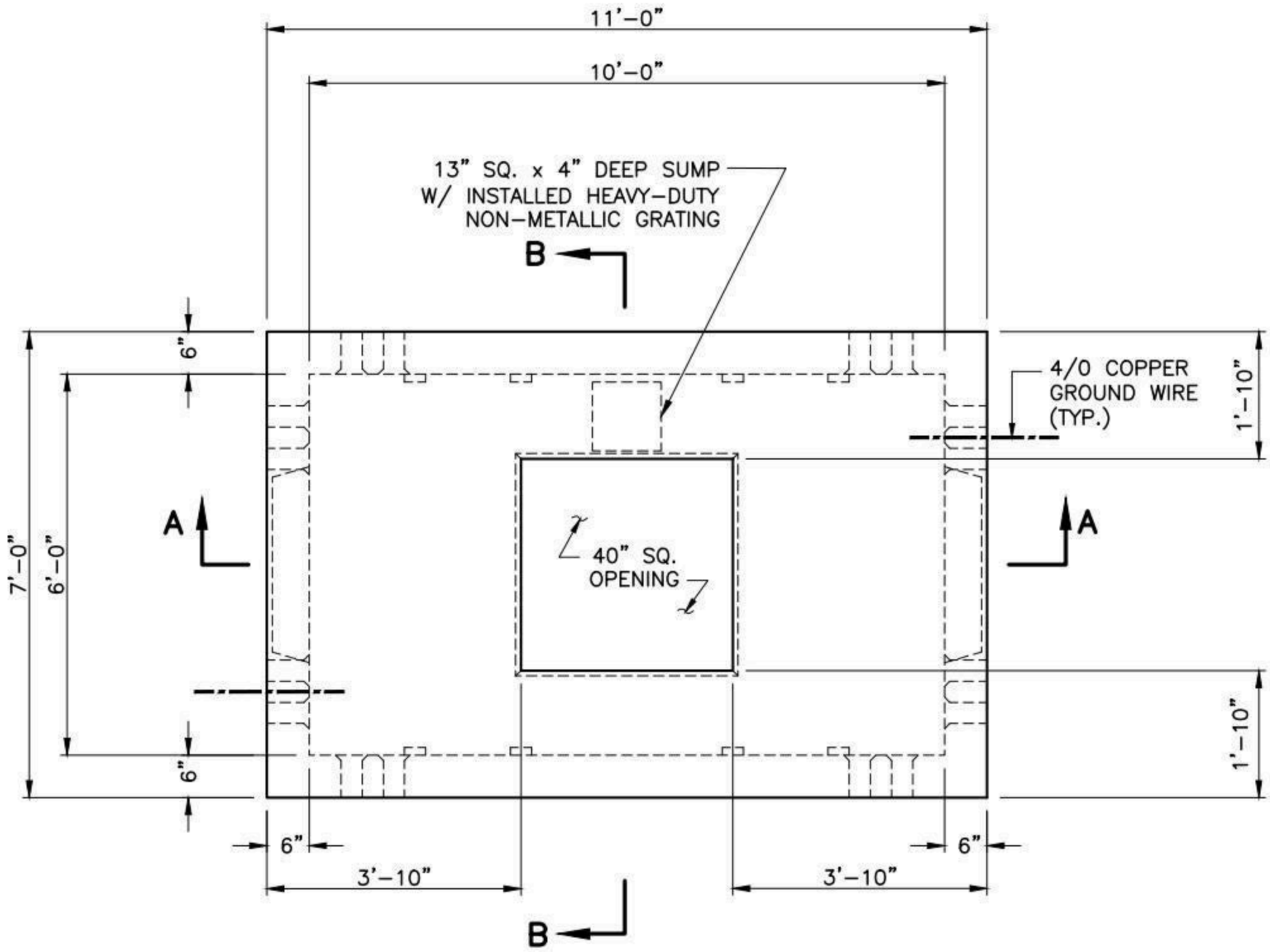

PLAN

NOTES:

1. CONCRETE: 5,000 PSI MINIMUM AFTER 28 DAYS.
2. DESIGN LOADING: AASHTO HS20-44, 0 TO 5 FEET COVER.
3. DESIGN SPECIFICATIONS – ACI 318 & AASHTO LOAD FACTOR DESIGN METHOD.
4. STEEL REINFORCEMENT CONFORMS TO ASTM A615, GRADE 60. MINIMUM STEEL COVER 1 $\frac{1}{2}$".
5. ALL TERMINATORS SHALL HAVE BELL ENDS FLUSH WITH THE INSIDE WALL.
6. CONSTRUCTION JOINT SHALL BE SEALED WITH 1"ø BUTYL RUBBER OR APPROVED EQUAL.
7. RACKING/STANCHIONS SOLD SEPARATELY.

SHEA PRODUCT ID: NSM1203	FILE NAME: ES-MA M1203				NPCA CERTIFIED PLANT
WEIGHT (LBS): 28600	DRAWN BY: L.P.	DATE: 8/23/2017	PAGE: II.B.3-1		

Specifications subject to change without notice

SHEA CONCRETE PRODUCTS
New England's Premier Precaster
800-696-7432 (SHEA)
www.sheaconcrete.com
MAILING ADDRESS: 87 HAVERHILL RD AMESBURY, MA 01913

EVERSOURCE-MA MANHOLE
M1203 6' W X 10' L X 6' H

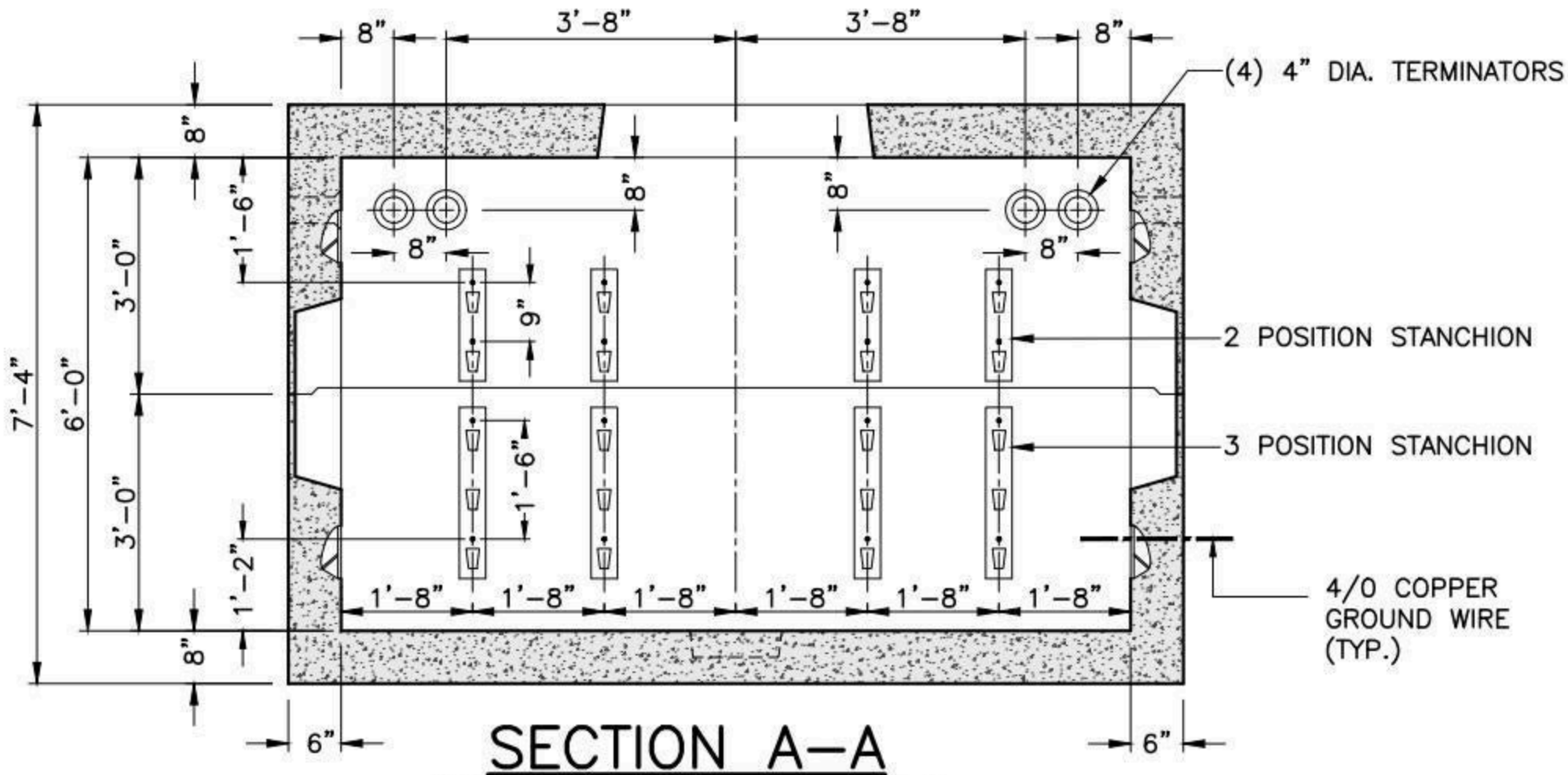

SECTION A-A

OPPOSITE WALLS ARE MIRROR IMAGES.

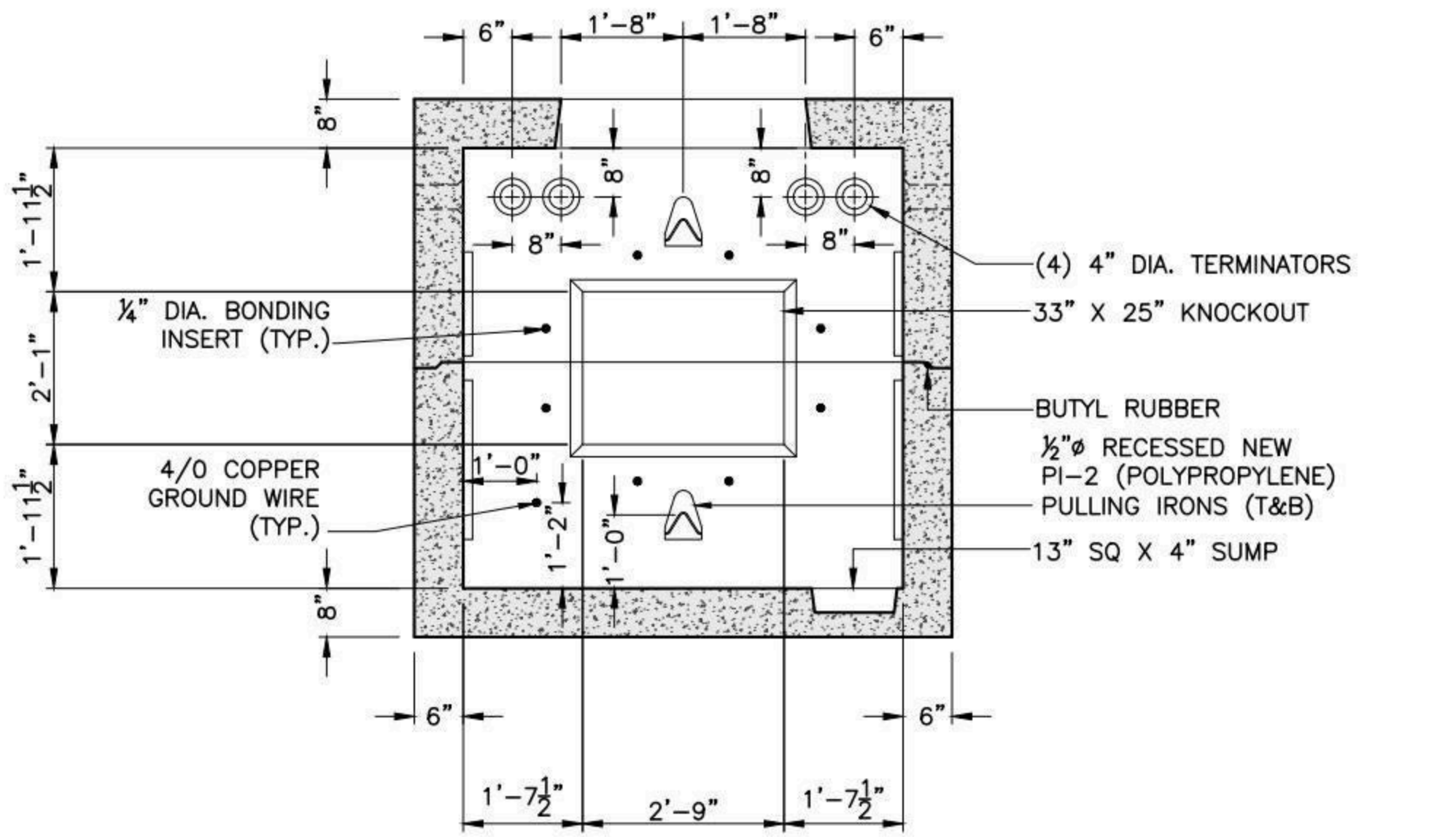

SECTION B-B

OPPOSITE WALLS ARE MIRROR IMAGES.

SHEA PRODUCT ID: NSM1203	FILE NAME: ES-MA M1203				
WEIGHT (LBS): 28600	DRAWN BY: L.P.	DATE: 8/23/2017	PAGE: II.B.3-2		

Specifications subject to change without notice

SHEA CONCRETE PRODUCTS
New England's Premier Precaster
800-696-7432 (SHEA)
www.sheaconcrete.com
MAILING ADDRESS: 87 HAVERHILL RD AMESBURY, MA 01913

EVERSOURCE-MA MANHOLE
M1204 6' W X 10' L X 8' H

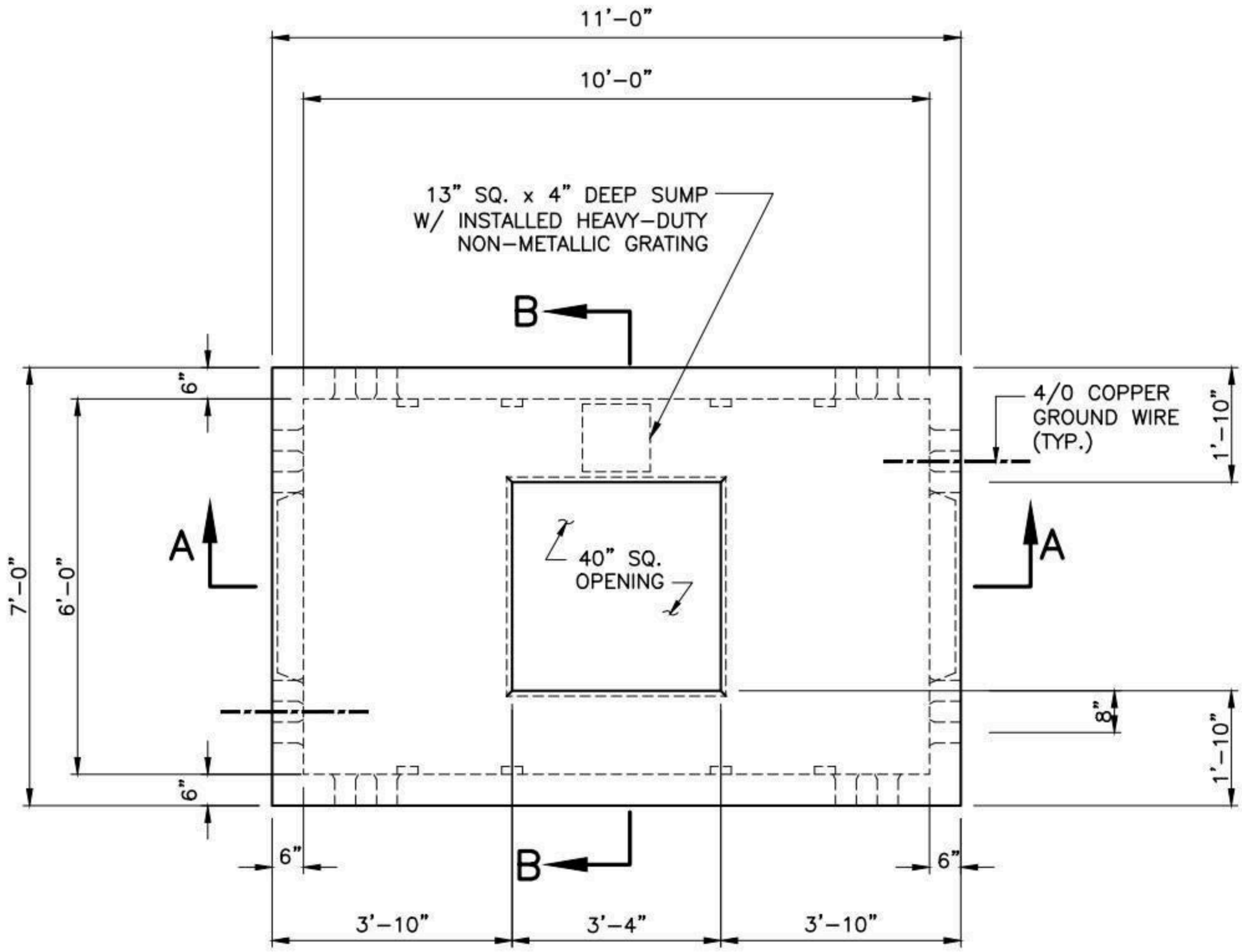

PLAN

NOTES:

1. CONCRETE: 5,000 PSI MINIMUM AFTER 28 DAYS.
2. DESIGN LOADING: AASHTO HS20-44, 0 TO 5 FEET COVER.
3. DESIGN SPECIFICATIONS – ACI 318 & AASHTO LOAD FACTOR DESIGN METHOD.
4. STEEL REINFORCEMENT CONFORMS TO ASTM A615, GRADE 60. MINIMUM STEEL COVER 1 ½".
5. ALL TERMINATORS SHALL HAVE BELL ENDS FLUSH WITH THE INSIDE WALL.
6. CONSTRUCTION JOINT SHALL BE SEALED WITH 1"ø BUTYL RUBBER OR APPROVED EQUAL.
7. RACKING/STANCHIONS SOLD SEPARATELY.

SHEA PRODUCT ID: NSM1204	FILE NAME: ES-MA M1204				NPCA CERTIFIED PLANT
WEIGHT (LBS): 34000	DRAWN BY: L.P.	DATE: 8/23/2017	PAGE: II.B.4-1		

Specifications subject to change without notice

SHEA CONCRETE PRODUCTS
New England's Premier Precaster
800-696-7432 (SHEA)
www.sheaconcrete.com
MAILING ADDRESS: 87 HAVERHILL RD AMESBURY, MA 01913

EVERSOURCE-MA MANHOLE
M1204 6' W X 10' L X 8' H

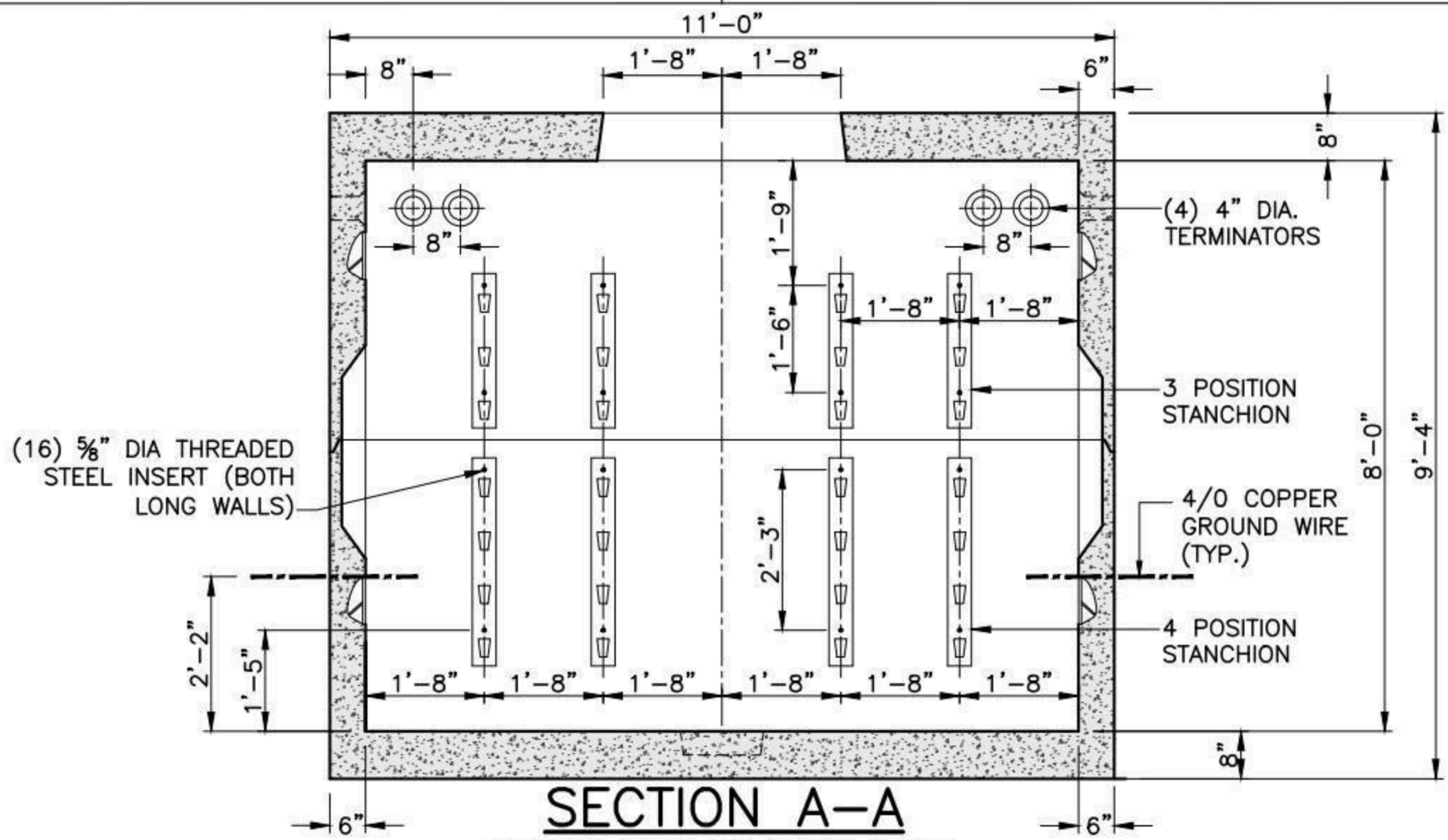

SECTION A-A

OPPOSITE WALLS ARE MIRROR IMAGES.

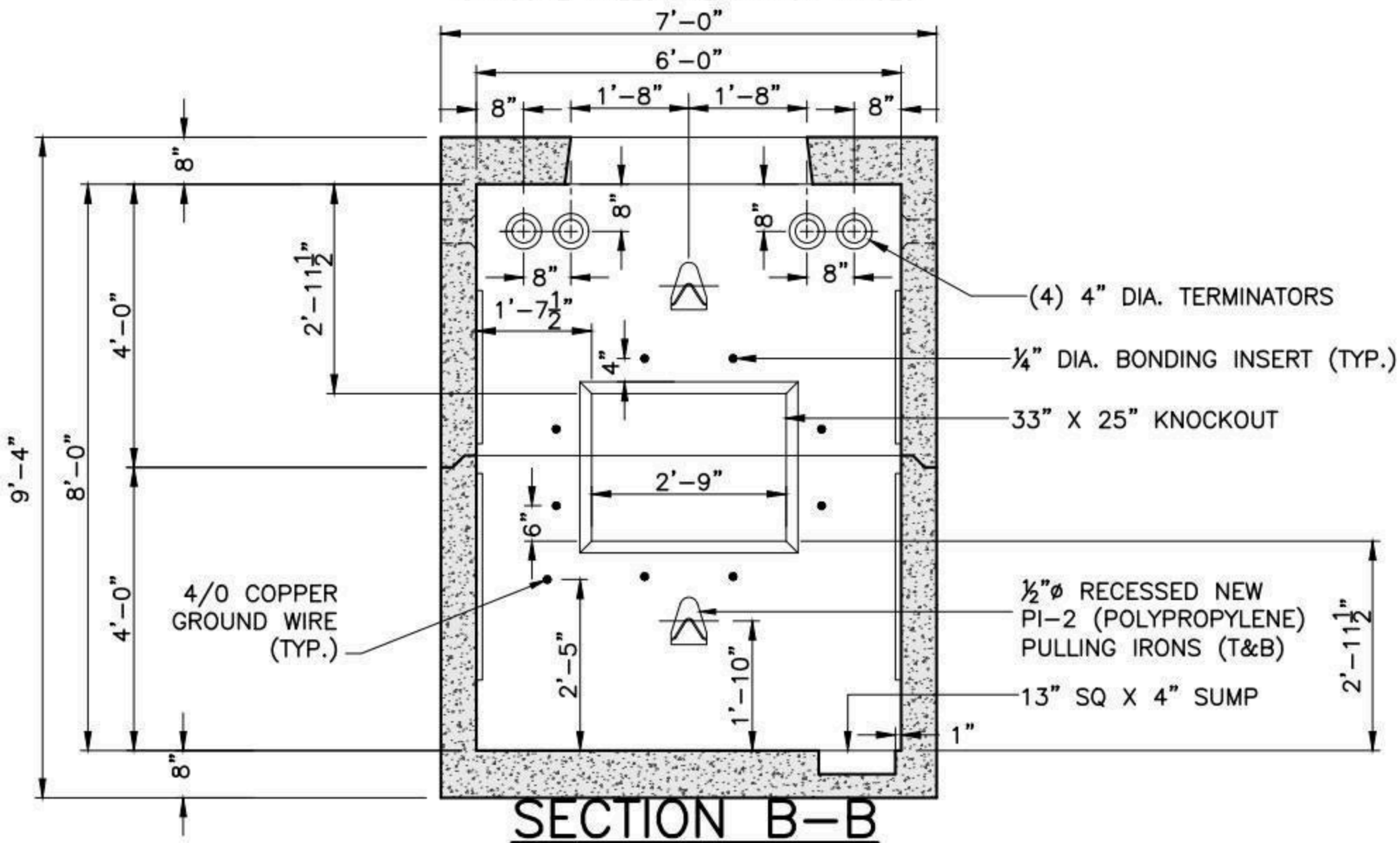

SECTION B-B

OPPOSITE WALLS ARE MIRROR IMAGES.

SHEA PRODUCT ID: NSM1204	FILE NAME: ES-MA M1204			
WEIGHT (LBS): 34000	DRAWN BY: L.P.	DATE: 8/23/2017	PAGE: II.B.4-2	

Specifications subject to change without notice

SHEA CONCRETE PRODUCTS
New England's Premier Precaster
800-696-7432 (SHEA)
www.sheaconcrete.com
MAILING ADDRESS: 87 HAVERHILL RD AMESBURY, MA 01913

EVERSOURCE-MA MANHOLE
M1205 7' W X 13' L X 8' H

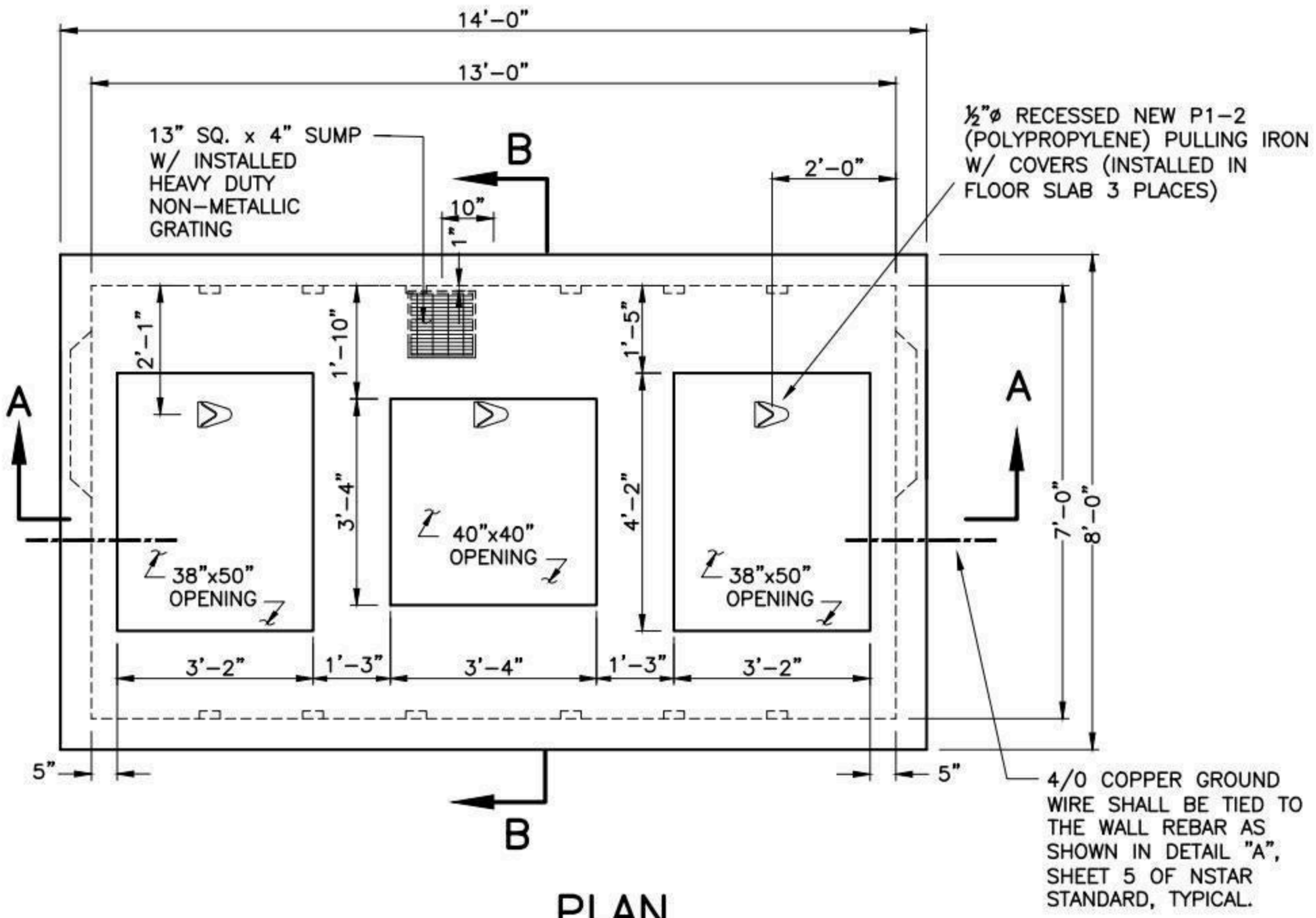

PLAN

NOTES:

1. CONCRETE: 5,000 PSI MINIMUM AFTER 28 DAYS.
2. DESIGN LOADING: AASHTO HS20-44, 0 TO 5 FEET COVER.
3. DESIGN SPECIFICATIONS – ACI 318 & AASHTO LOAD FACTOR DESIGN METHOD.
4. STEEL REINFORCEMENT CONFORMS TO ASTM A615, GRADE 60. MINIMUM STEEL COVER 1 ½".
5. ALL TERMINATORS SHALL HAVE BELL ENDS FLUSH WITH THE INSIDE WALL.
6. CONSTRUCTION JOINT SHALL BE SEALED WITH 1"ø BUTYL RUBBER OR APPROVED EQUAL.
7. RACKING/STANCHIONS SOLD SEPARATELY.

SHEA PRODUCT ID: NSM1205	FILE NAME: ES-MA M1205			NPCA CERTIFIED PLANT
WEIGHT (LBS): 46000	DRAWN BY: L.P.	DATE: 9/1/2017	PAGE: II.B.5-1	

Specifications subject to change without notice

SHEA CONCRETE PRODUCTS
New England's Premier Precaster
800-696-7432 (SHEA)
www.sheaconcrete.com
MAILING ADDRESS: 87 HAVERHILL RD AMESBURY, MA 01913

EVERSOURCE-MA MANHOLE
M1205 7' W X 13' L X 8' H

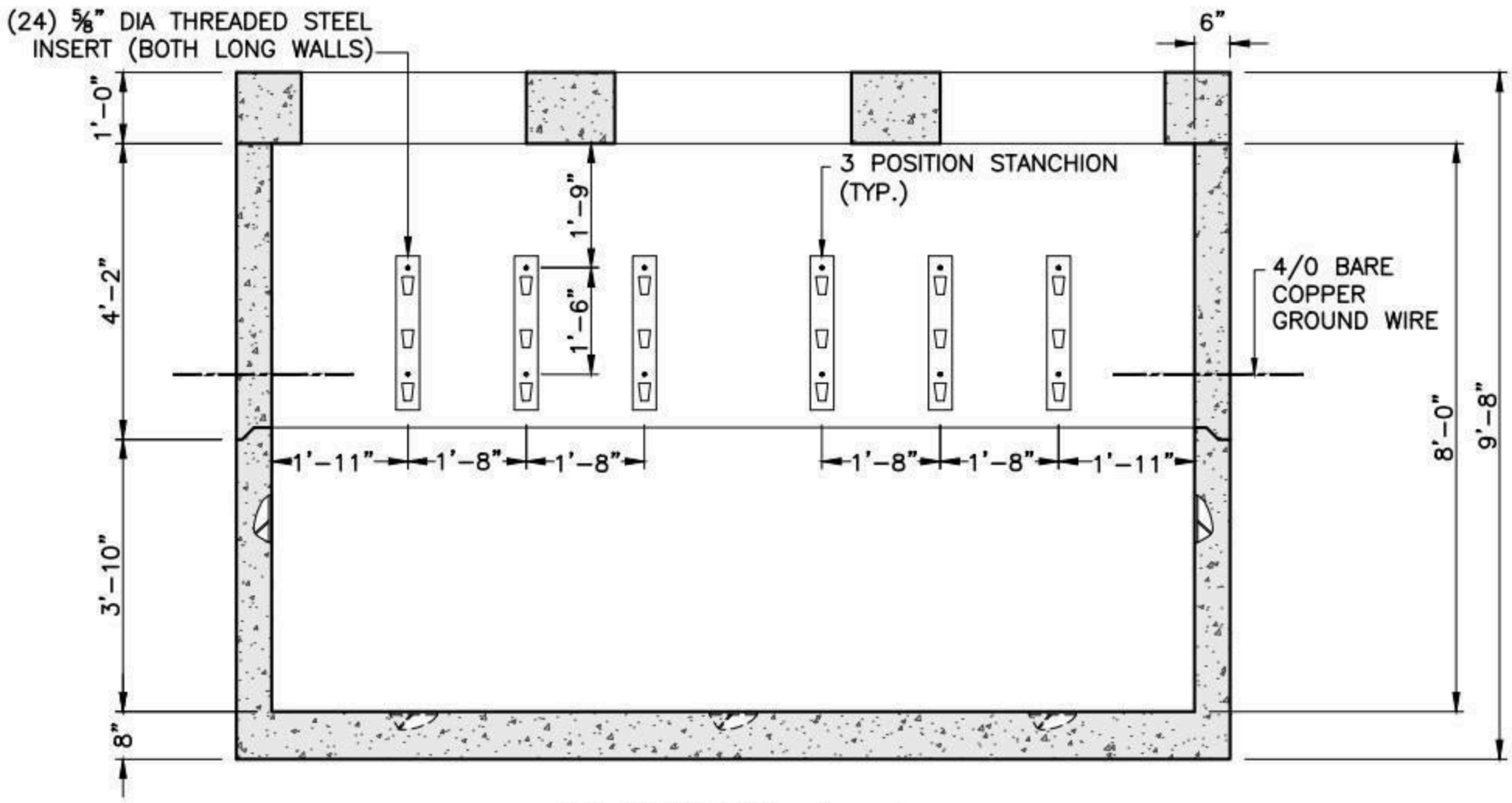

SECTION A-A

LONG WALLS ARE MIRROR IMAGES.

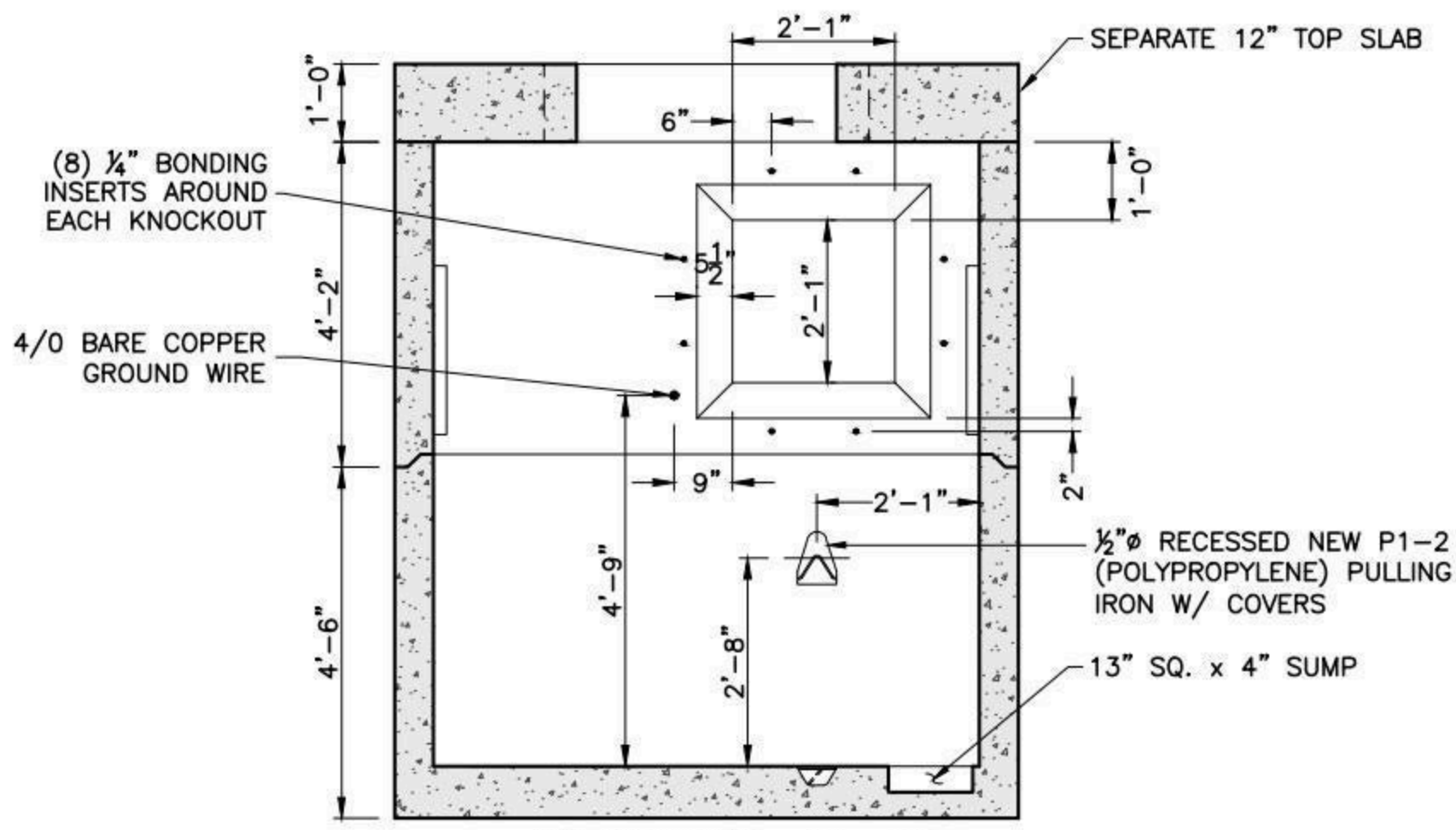

SECTION B-B

SHORT WALLS ARE MIRROR IMAGES.

SHEA PRODUCT ID: NSM1205	FILE NAME: ES-MA M1205				NPCA CERTIFIED PLANT
WEIGHT (LBS): 46000	DRAWN BY: L.P.	DATE: 9/1/2017	PAGE: II.B.5-2		

773 Salem Street-Wilmington, MA | 153 Cranberry Hwy-Rochester, MA | 87 Haverhill Road-Amesbury, MA | 160 Old Turnpike Rd-Nottingham, NH

Specifications subject to change without notice

SHEA CONCRETE PRODUCTS
New England's Premier Precaster
800-696-7432 (SHEA)
www.sheaconcrete.com
MAILING ADDRESS: 87 HAVERHILL RD AMESBURY, MA 01913

EVERSOURCE-MA MANHOLE M1205 COVER ONLY

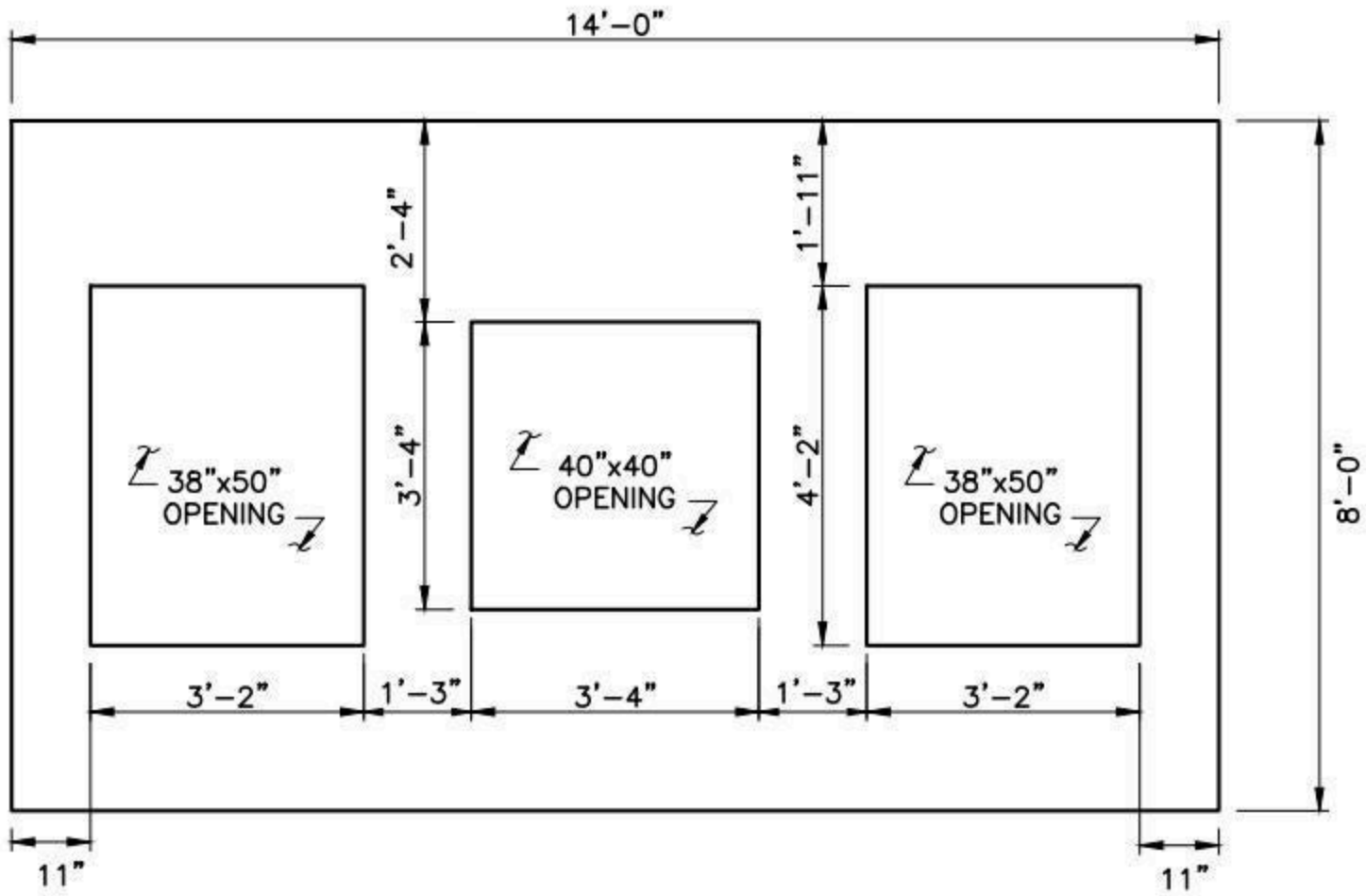

PLAN

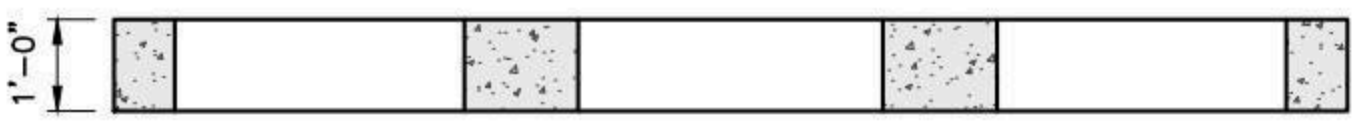

SECTION

NOTES:

1. CONCRETE: 5,000 PSI MINIMUM AFTER 28 DAYS.
2. DESIGN LOADING: AASHTO HS20-44, 0 TO 5 FEET COVER.
3. DESIGN SPECIFICATIONS – ACI 318 & AASHTO LOAD FACTOR DESIGN METHOD.
4. STEEL REINFORCEMENT CONFORMS TO ASTM A615, GRADE 60. MINIMUM STEEL COVER 1 ½".
5. CONSTRUCTION JOINT SHALL BE SEALED WITH 1"ø BUTYL RUBBER OR APPROVED EQUAL.

SHEA PRODUCT ID:	NSM1205	FILE NAME:	ES-MA M1205		
WEIGHT (LBS):	10800	DRAWN BY: L.P.	DATE: 9/1/2017	PAGE: II.B.5-3	NPCA CERTIFIED PLANT

Specifications subject to change without notice

SHEA CONCRETE PRODUCTS
New England's Premier Precaster
800-696-7432 (SHEA)
www.sheaconcrete.com
MAILING ADDRESS: 87 HAVERHILL RD AMESBURY, MA 01913

EVERSOURCE-MA MANHOLE
M1207 3' W X 3' L X 4' H

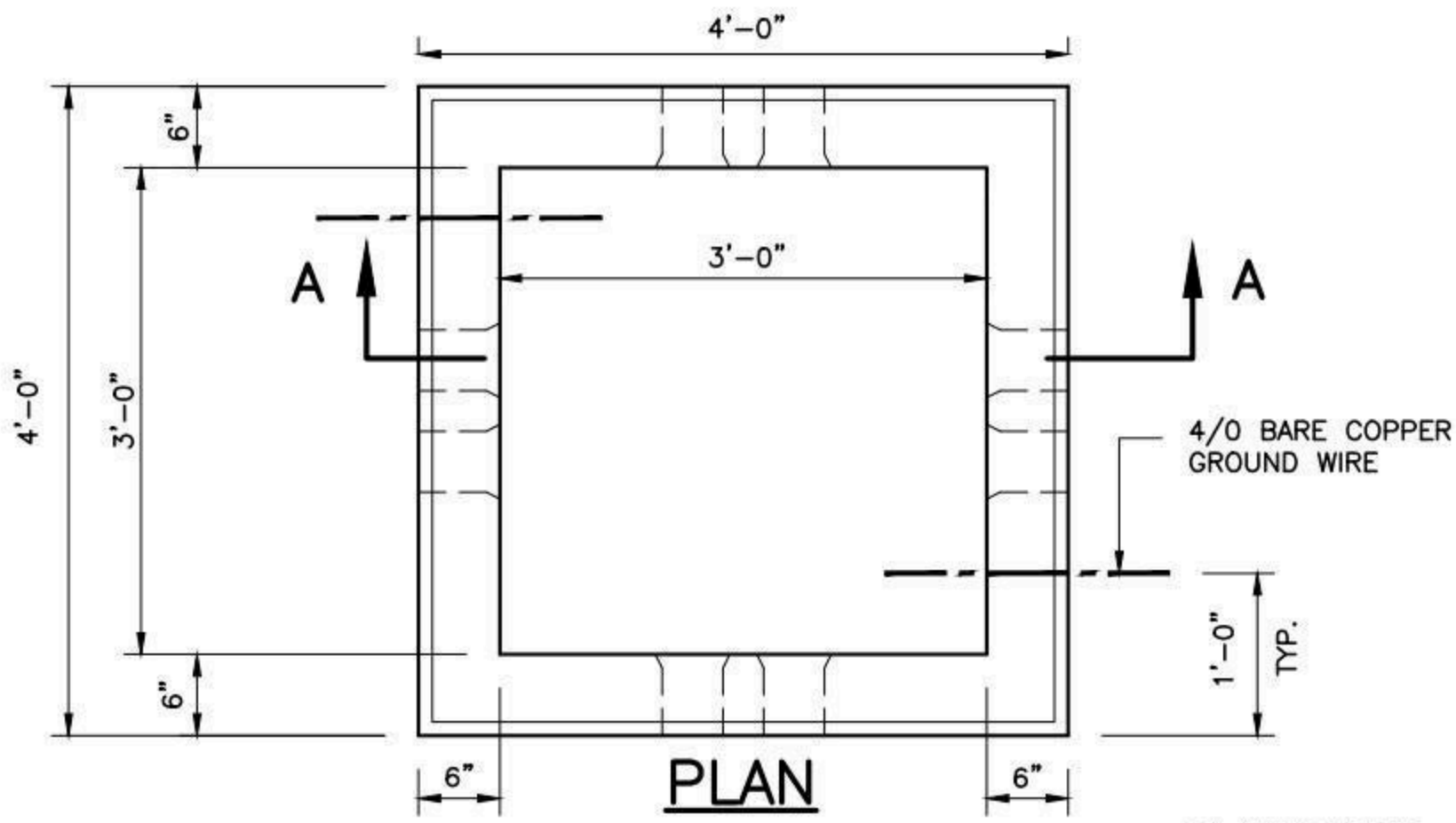

PLAN

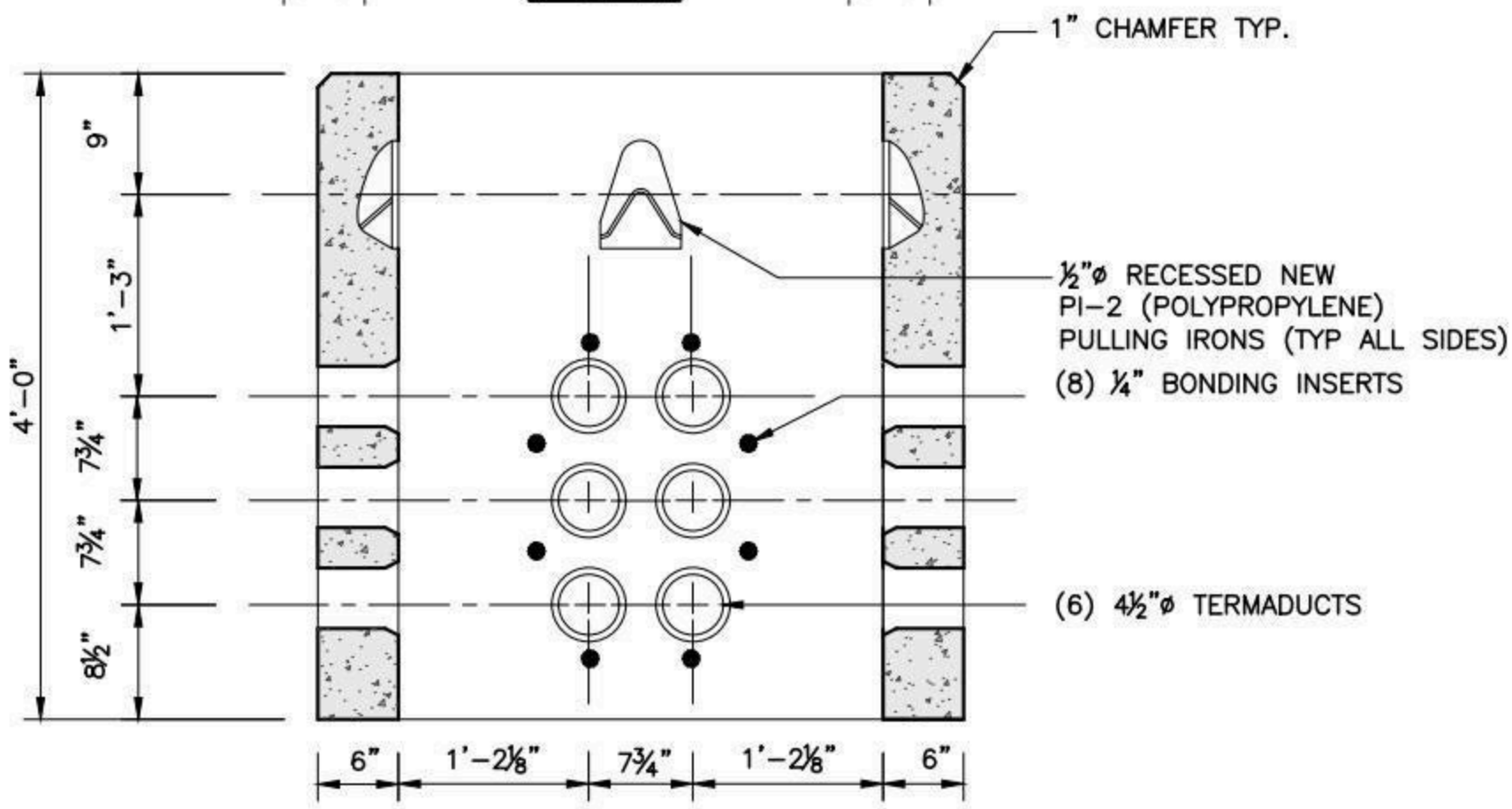

SECTION A-A

OPEN TOP & BOTTOM (ALL WALLS ARE SIMILAR)

NOTES:

1. CONCRETE: 5,000 PSI MINIMUM AFTER 28 DAYS.
2. DESIGN LOADING: AASHTO HS20-44, 0 TO 5 FEET COVER.
3. DESIGN SPECIFICATIONS – ACI 318 & AASHTO LOAD FACTOR DESIGN METHOD.
4. STEEL REINFORCEMENT CONFORMS TO ASTM A615, GRADE 60. MINIMUM STEEL COVER 1 ½".
5. ALL TERMINATORS SHALL HAVE BELL ENDS FLUSH WITH THE INSIDE WALL.

SHEA PRODUCT ID: NSM1207	FILE NAME: ES-MA M1207			NPCA CERTIFIED PLANT
WEIGHT (LBS): 4060	DRAWN BY: L.P.	DATE: 9/8/2017	PAGE: II.B.6	

Specifications subject to change without notice

SHEA CONCRETE PRODUCTS
New England's Premier Precaster
800-696-7432 (SHEA)
www.sheaconcrete.com
MAILING ADDRESS: 87 HAVERHILL RD AMESBURY, MA 01913

EVERSOURCE-MA MANHOLE
M1208 4' W X 4' L X 4' H

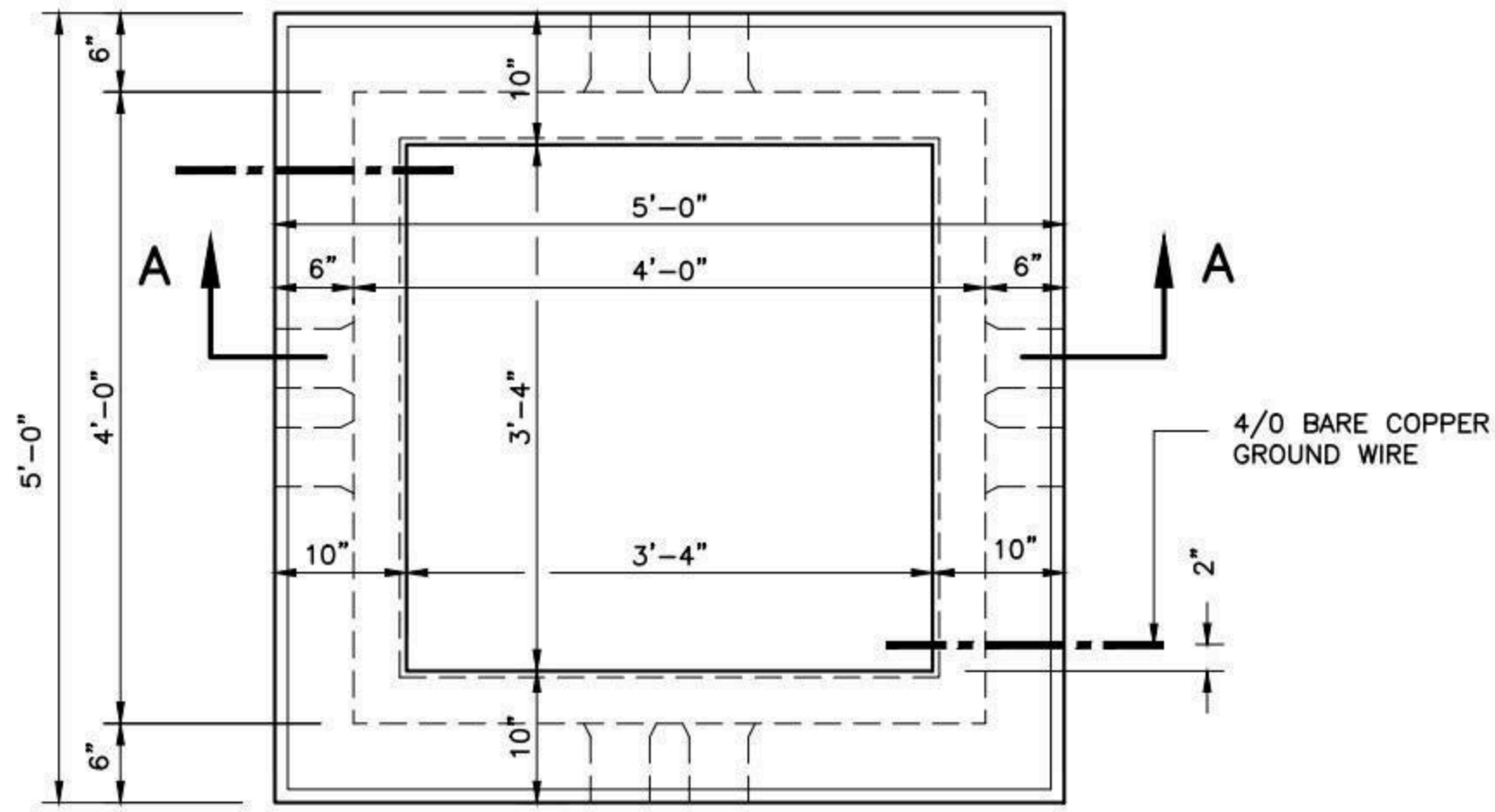

PLAN

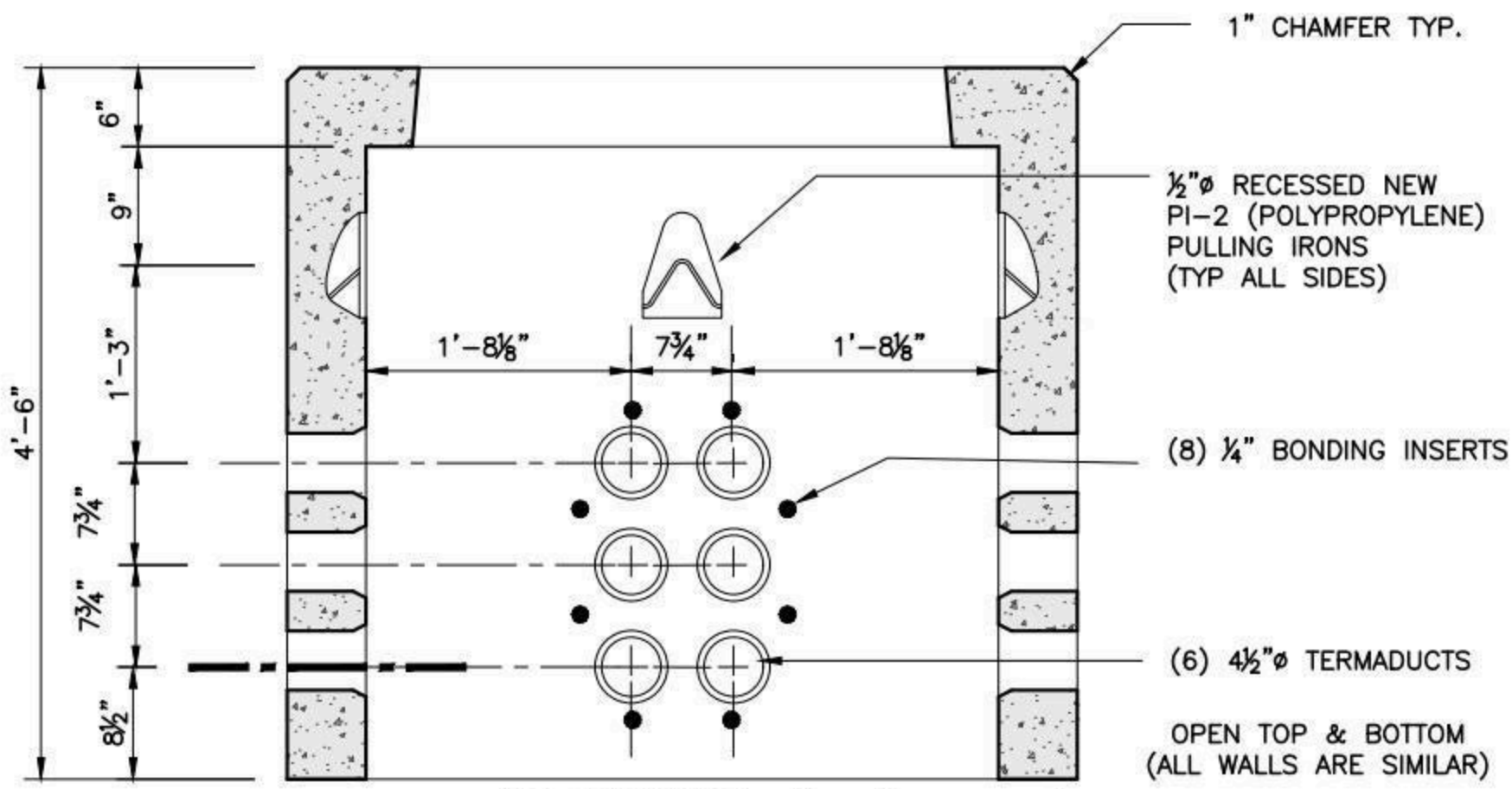

SECTION A-A

NOTES:

1. CONCRETE: 5,000 PSI MINIMUM AFTER 28 DAYS.
2. DESIGN LOADING: AASHTO HS20-44, 0 TO 5 FEET COVER.
3. DESIGN SPECIFICATIONS – ACI 318 & AASHTO LOAD FACTOR DESIGN METHOD.
4. STEEL REINFORCEMENT CONFORMS TO ASTM A615, GRADE 60. MINIMUM STEEL COVER 1 ½".
5. ALL TERMINATORS SHALL HAVE BELL ENDS FLUSH WITH THE INSIDE WALL.

SHEA PRODUCT ID: NSM1208	FILE NAME: ES-MA M1208				NPCA CERTIFIED PLANT
WEIGHT (LBS): 6230	DRAWN BY: L.P.	DATE: 9/8/2017	PAGE: II.B.7		

Specifications subject to change without notice

SHEA CONCRETE PRODUCTS
New England's Premier Precaster
800-696-7432 (SHEA)
www.sheaconcrete.com
MAILING ADDRESS: 87 HAVERHILL RD AMESBURY, MA 01913

EVERSOURCE-MA MANHOLE
M1209 5' W X 7' L X 6'-6 H

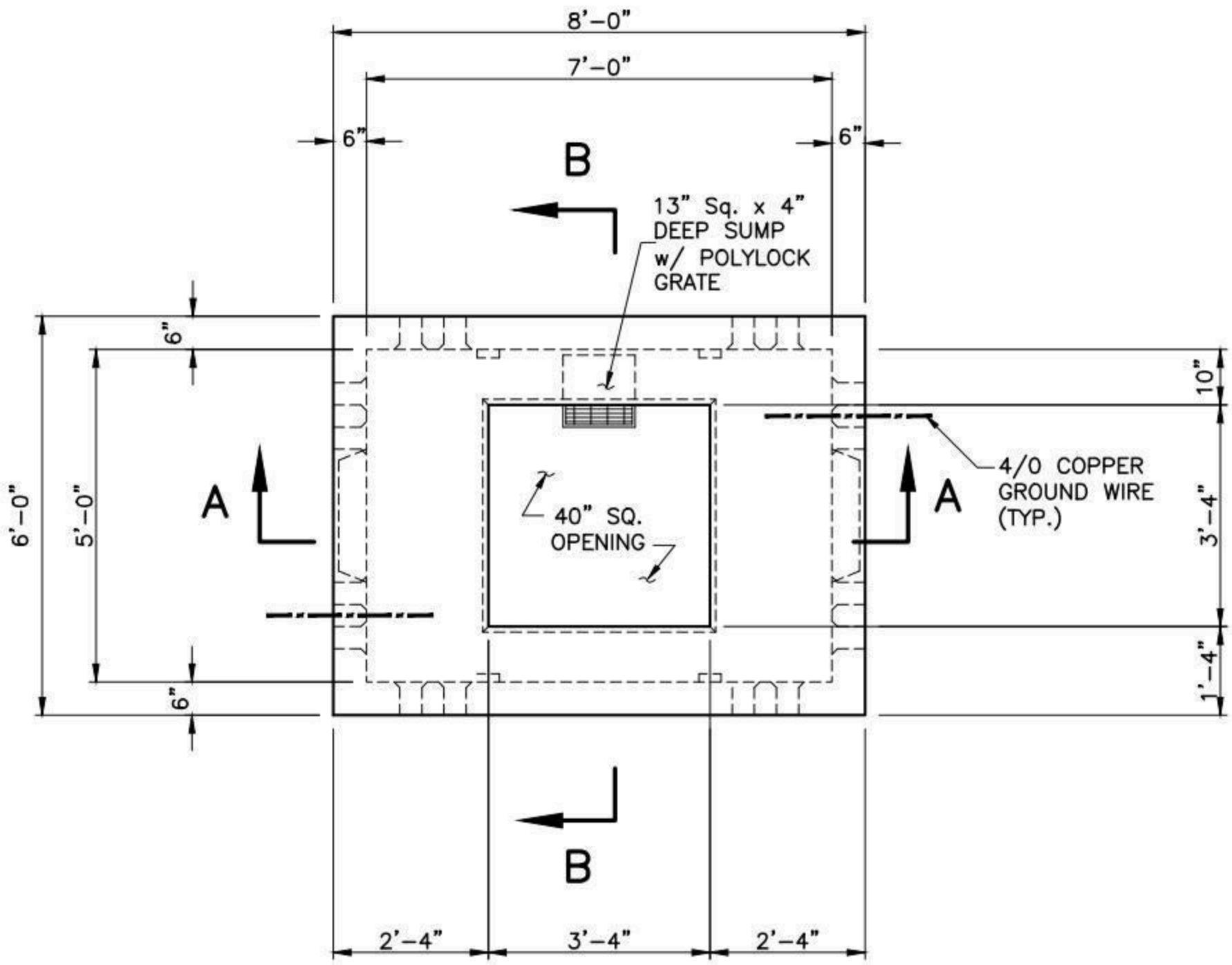

PLAN

NOTES:

1. CONCRETE: 5,000 PSI MINIMUM AFTER 28 DAYS.
2. DESIGN LOADING: AASHTO HS20-44, 0 TO 5 FEET COVER.
3. DESIGN SPECIFICATIONS – ACI 318 & AASHTO LOAD FACTOR DESIGN METHOD.
4. STEEL REINFORCEMENT CONFORMS TO ASTM A615, GRADE 60. MINIMUM STEEL COVER 1 ½".
5. ALL TERMINATORS SHALL HAVE BELL ENDS FLUSH WITH THE INSIDE WALL.
6. CONSTRUCTION JOINT SHALL BE SEALED WITH 1"ø BUTYL RUBBER OR APPROVED EQUAL.
7. RACKING/STANCHIONS SOLD SEPARATELY.

SHEA PRODUCT ID: NSM1209	FILE NAME: ES-MA M1209				NPCA CERTIFIED PLANT
WEIGHT (LBS): 18410	DRAWN BY: L.P.	DATE: 9/15/2017	PAGE: II.B.8-1		

Specifications subject to change without notice

SHEA CONCRETE PRODUCTS
New England's Premier Precaster
800-696-7432 (SHEA)
www.sheaconcrete.com
MAILING ADDRESS: 87 HAVERHILL RD AMESBURY, MA 01913

EVERSOURCE-MA MANHOLE
M1209 5' W X 7' L X 6'-6 H

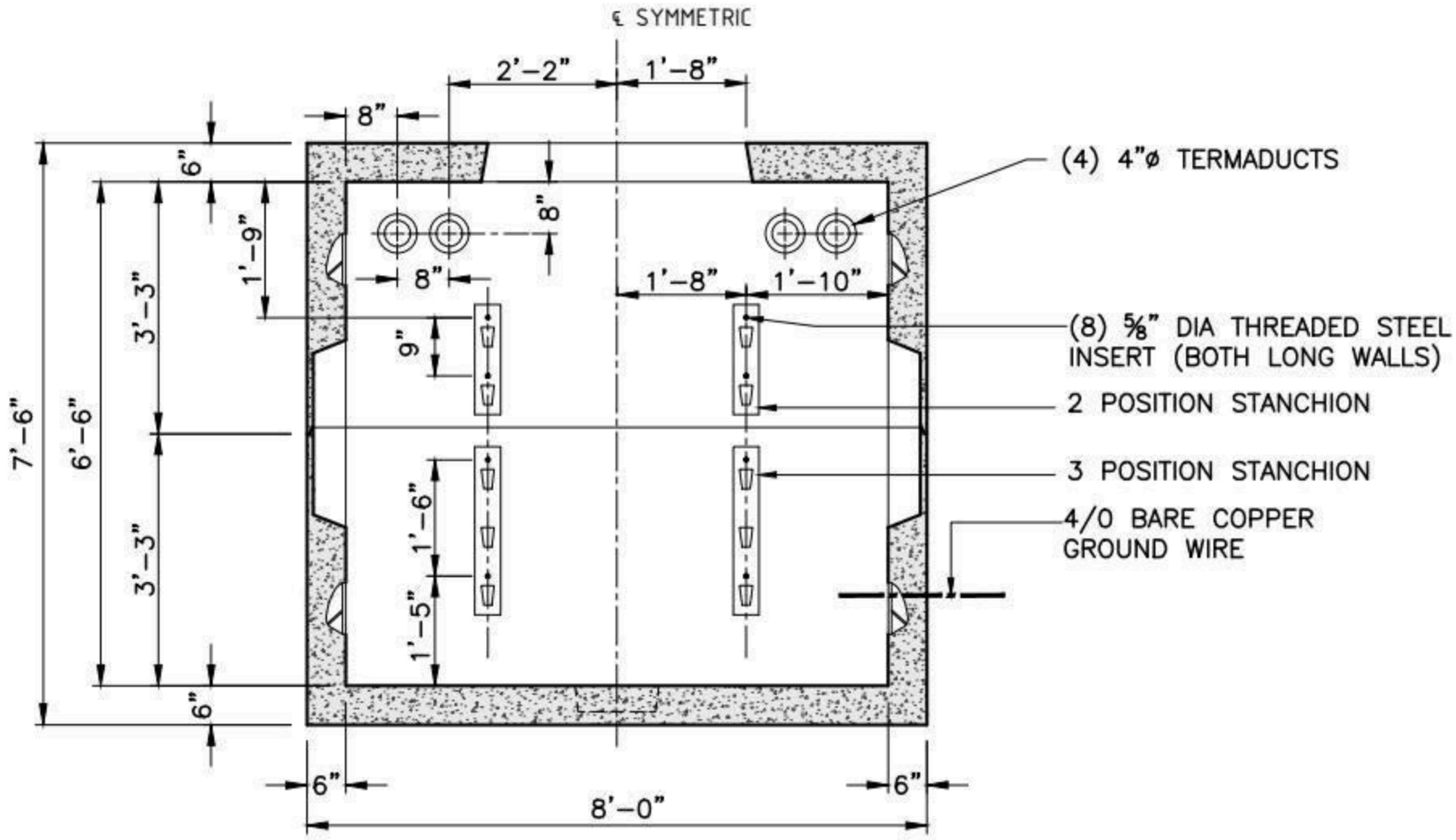

SECTION A-A

OPPOSITE WALLS ARE MIRROR IMAGES.

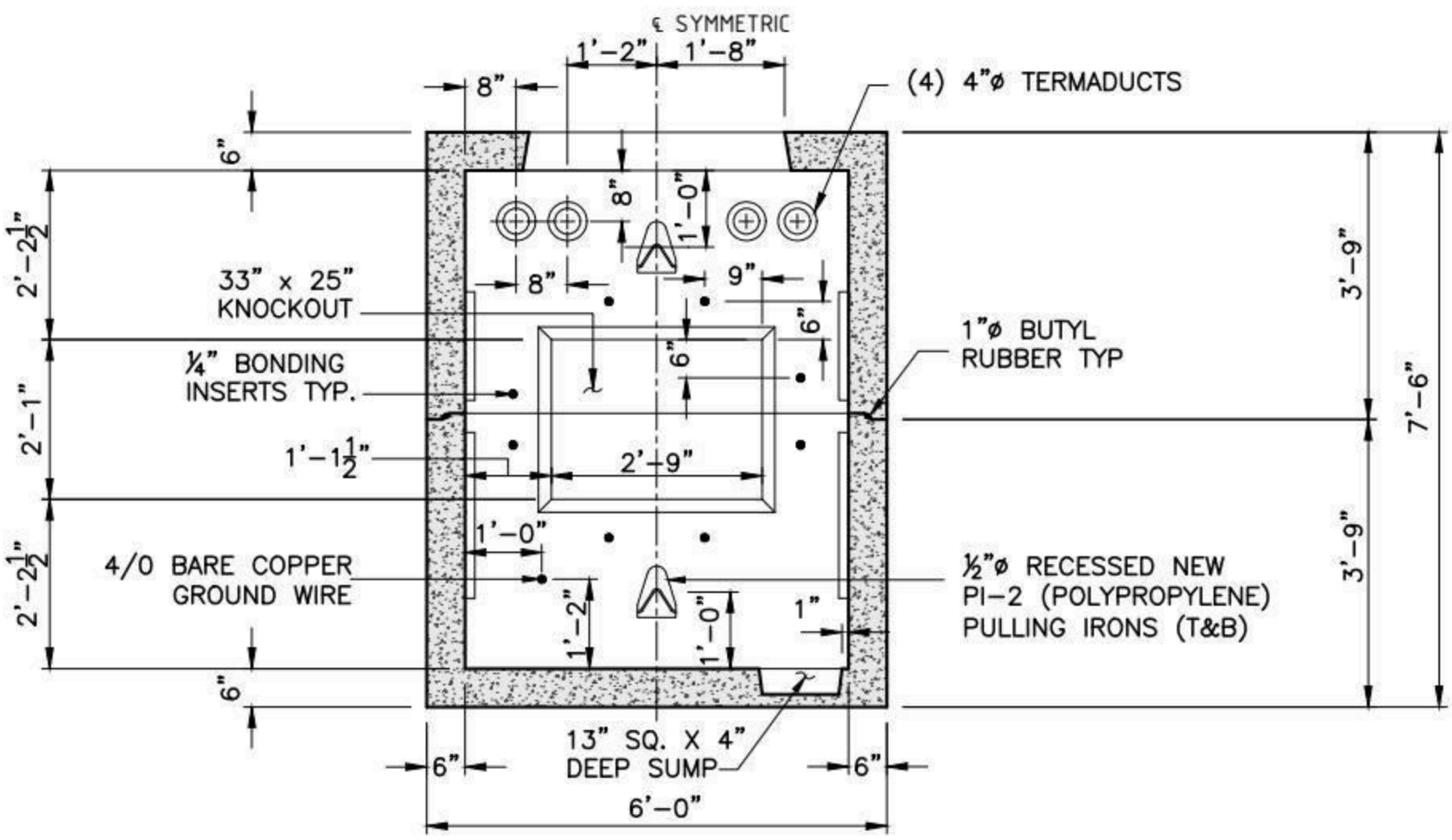

SECTION B-B

OPPOSITE WALLS ARE MIRROR IMAGES.

SHEA PRODUCT ID: NSM1209	FILE NAME: ES-MA M1209				NPCA CERTIFIED PLANT
WEIGHT (LBS): 18410	DRAWN BY: L.P.	DATE: 9/15/2017	PAGE: II.B.8-2		

Specifications subject to change without notice

SHEA CONCRETE PRODUCTS
New England's Premier Precaster
800-696-7432 (SHEA)
www.sheaconcrete.com
MAILING ADDRESS: 87 HAVERHILL RD AMESBURY, MA 01913

EVERSOURCE–MA MANHOLE
M1210 5' W X 10' L X 7' H

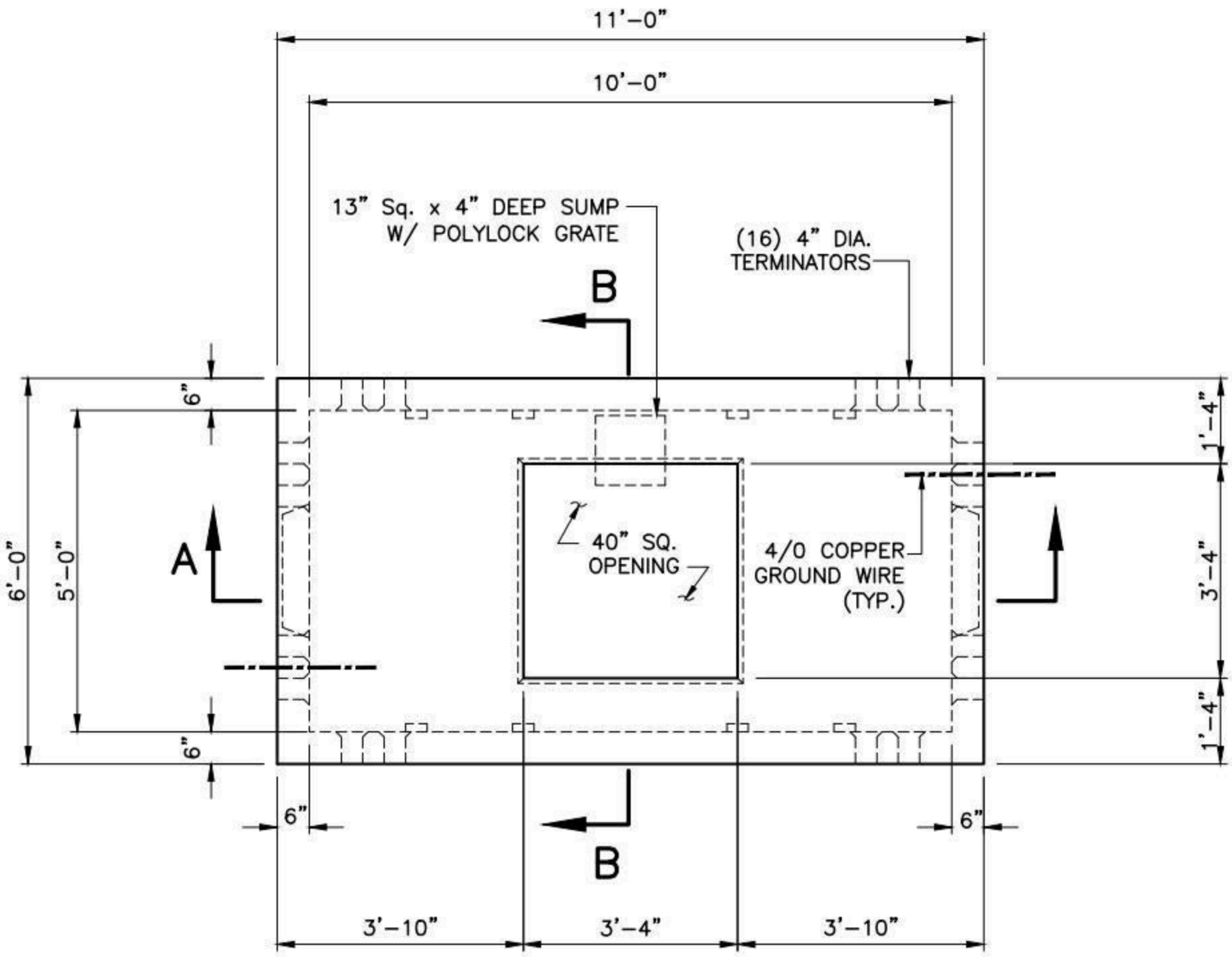

PLAN

NOTES:

1. CONCRETE: 5,000 PSI MINIMUM AFTER 28 DAYS.
2. DESIGN LOADING: AASHTO HS20–44, 0 TO 5 FEET COVER.
3. DESIGN SPECIFICATIONS – ACI 318 & AASHTO LOAD FACTOR DESIGN METHOD.
4. STEEL REINFORCEMENT CONFORMS TO ASTM A615, GRADE 60. MINIMUM STEEL COVER 1 ½".
5. ALL TERMINATORS SHALL HAVE BELL ENDS FLUSH WITH THE INSIDE WALL.
6. CONSTRUCTION JOINT SHALL BE SEALED WITH 1"ø BUTYL RUBBER OR APPROVED EQUAL.
7. RACKING/STANCHIONS SOLD SEPARATELY.

SHEA PRODUCT ID: NSM1210	FILE NAME: ES–MA M1210				NPCA CERTIFIED PLANT
WEIGHT (LBS): 25000	DRAWN BY: L.P.	DATE: 9/22/2017	PAGE: II.B.9–1		

Specifications subject to change without notice

SHEA CONCRETE PRODUCTS
New England's Premier Precaster
800-696-7432 (SHEA)
www.sheaconcrete.com
MAILING ADDRESS: 87 HAVERHILL RD AMESBURY, MA 01913

EVERSOURCE-MA MANHOLE
M1210 5' W X 10' L X 7' H

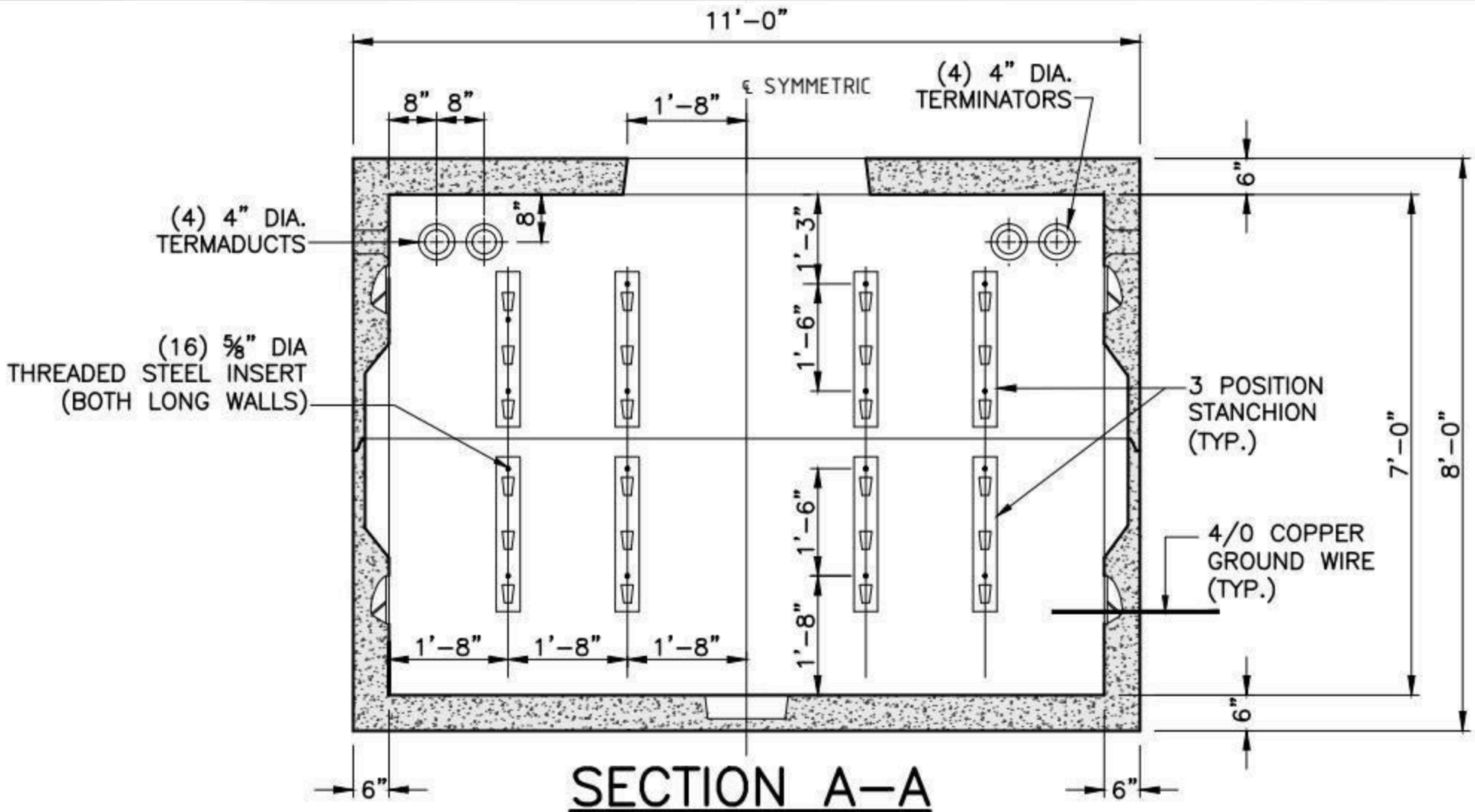

SECTION A-A

OPPOSITE WALLS ARE MIRROR IMAGES.

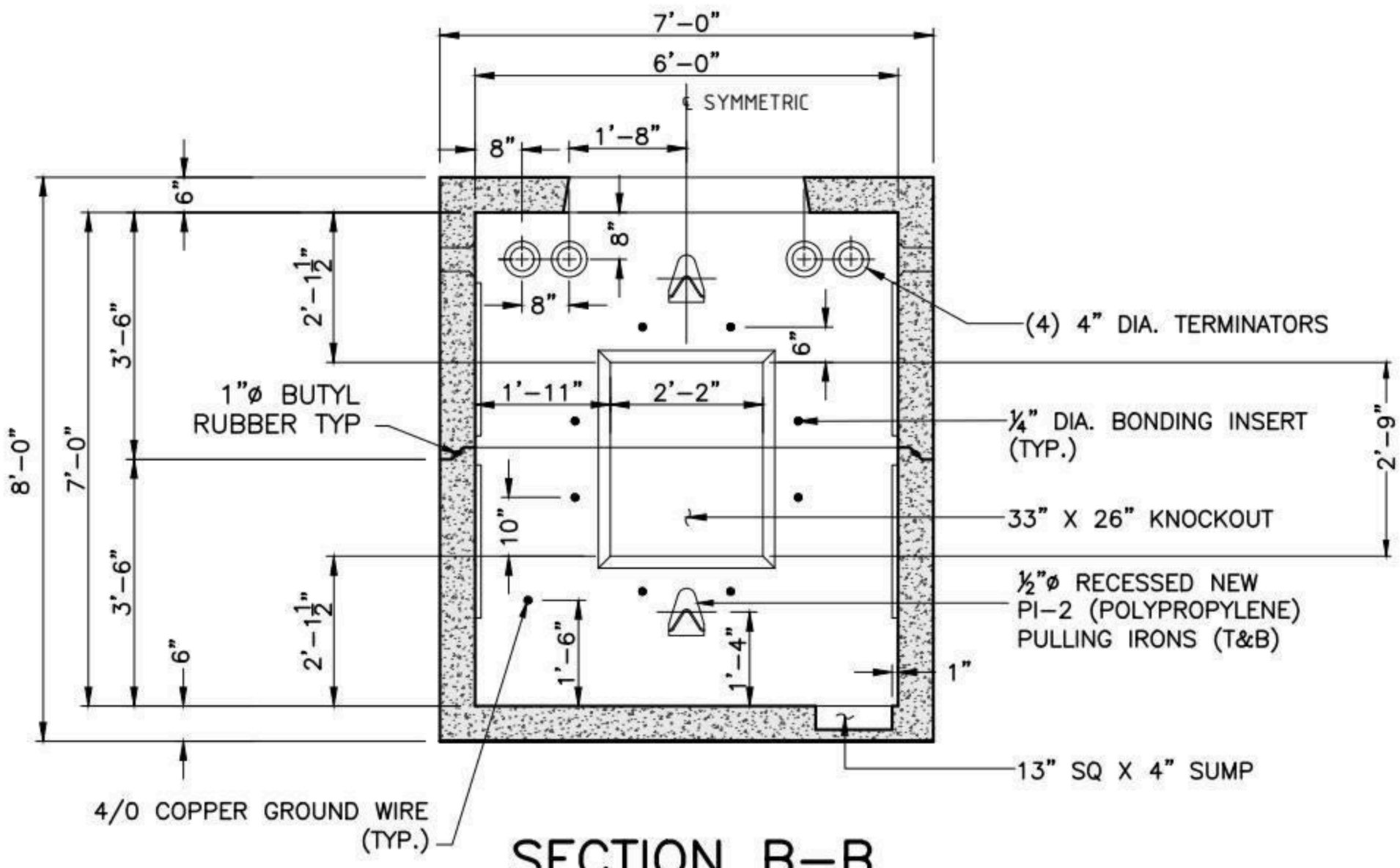

SECTION B-B

OPPOSITE WALLS ARE MIRROR IMAGES.

SHEA PRODUCT ID: NSM1210	FILE NAME: ES-MA M1210			
WEIGHT (LBS): 25000	DRAWN BY: L.P.	DATE: 9/22/2017	PAGE: II.B.9-2	

NPCA CERTIFIED PLANT

Specifications subject to change without notice

SHEA CONCRETE PRODUCTS
New England's Premier Precaster
800-696-7432 (SHEA)
www.sheaconcrete.com
MAILING ADDRESS: 87 HAVERHILL RD AMESBURY, MA 01913

EVERSOURCE-MA MANHOLE
M1211 10'W X 13'L X 6'-6"H

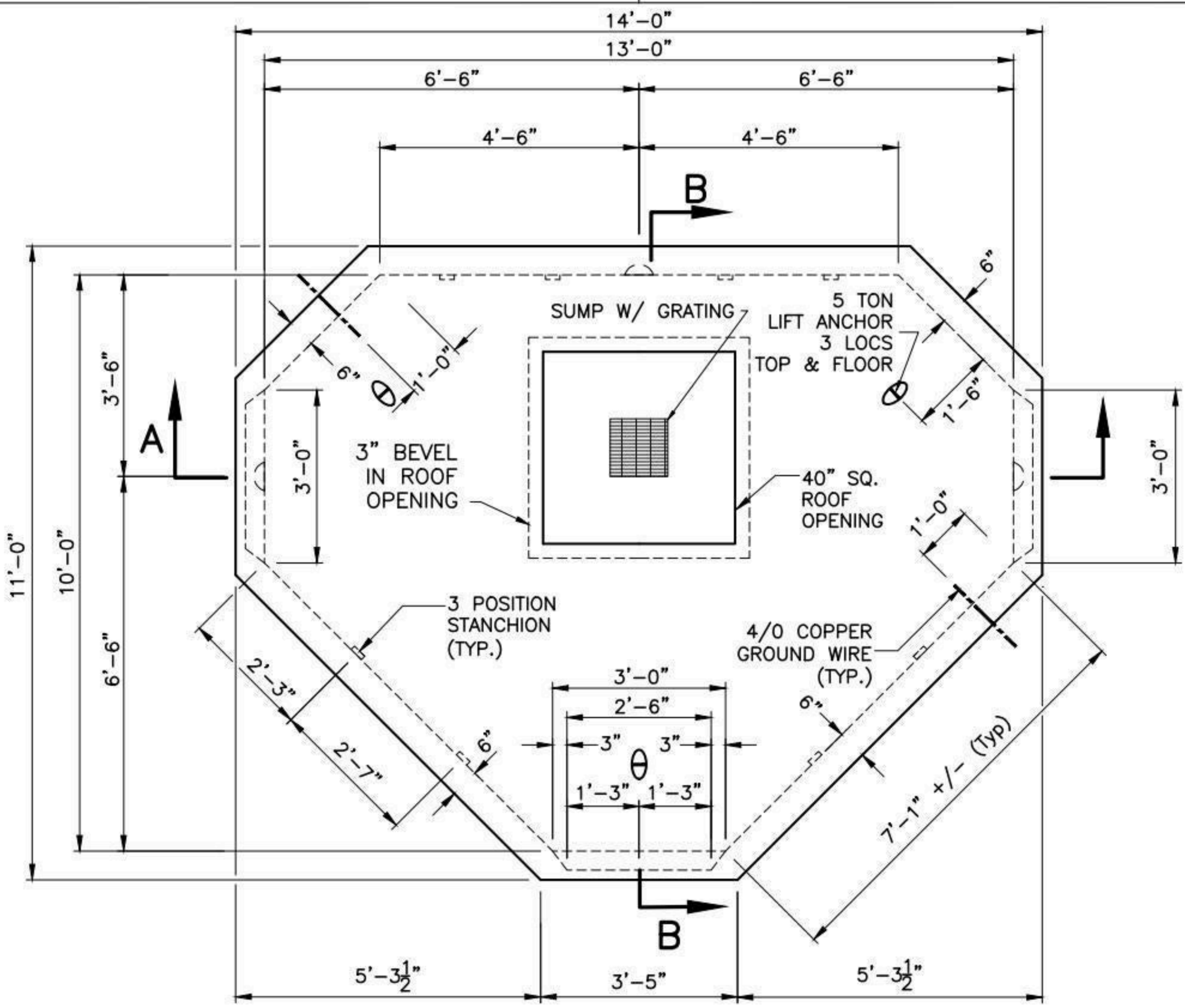

PLAN

NOTES:

1. CONCRETE: 5,000 PSI MINIMUM AFTER 28 DAYS.
2. DESIGN LOADING: AASHTO HS20-44, 0 TO 5 FEET COVER.
3. DESIGN SPECIFICATIONS – ACI 318 & AASHTO LOAD FACTOR DESIGN METHOD.
4. STEEL REINFORCEMENT CONFORMS TO ASTM A615, GRADE 60. MINIMUM STEEL COVER 1 ½".
5. ALL TERMINATORS SHALL HAVE BELL ENDS FLUSH WITH THE INSIDE WALL.
6. CONSTRUCTION JOINT SHALL BE SEALED WITH 1"ø BUTYL RUBBER OR APPROVED EQUAL.
7. RACKING/STANCHIONS SOLD SEPARATELY.

SHEA PRODUCT ID: NSM1211	FILE NAME: ES-MA M1211			
WEIGHT (LBS): 40900	DRAWN BY: L.P.	DATE: 9/22/2017	PAGE: II.B.10-1	

Specifications subject to change without notice

SHEA CONCRETE PRODUCTS
New England's Premier Precaster
800-696-7432 (SHEA)
www.sheaconcrete.com
MAILING ADDRESS: 87 HAVERHILL RD AMESBURY, MA 01913

EVERSOURCE-MA MANHOLE
M1211 10'W X 13'L X 6'-6"H

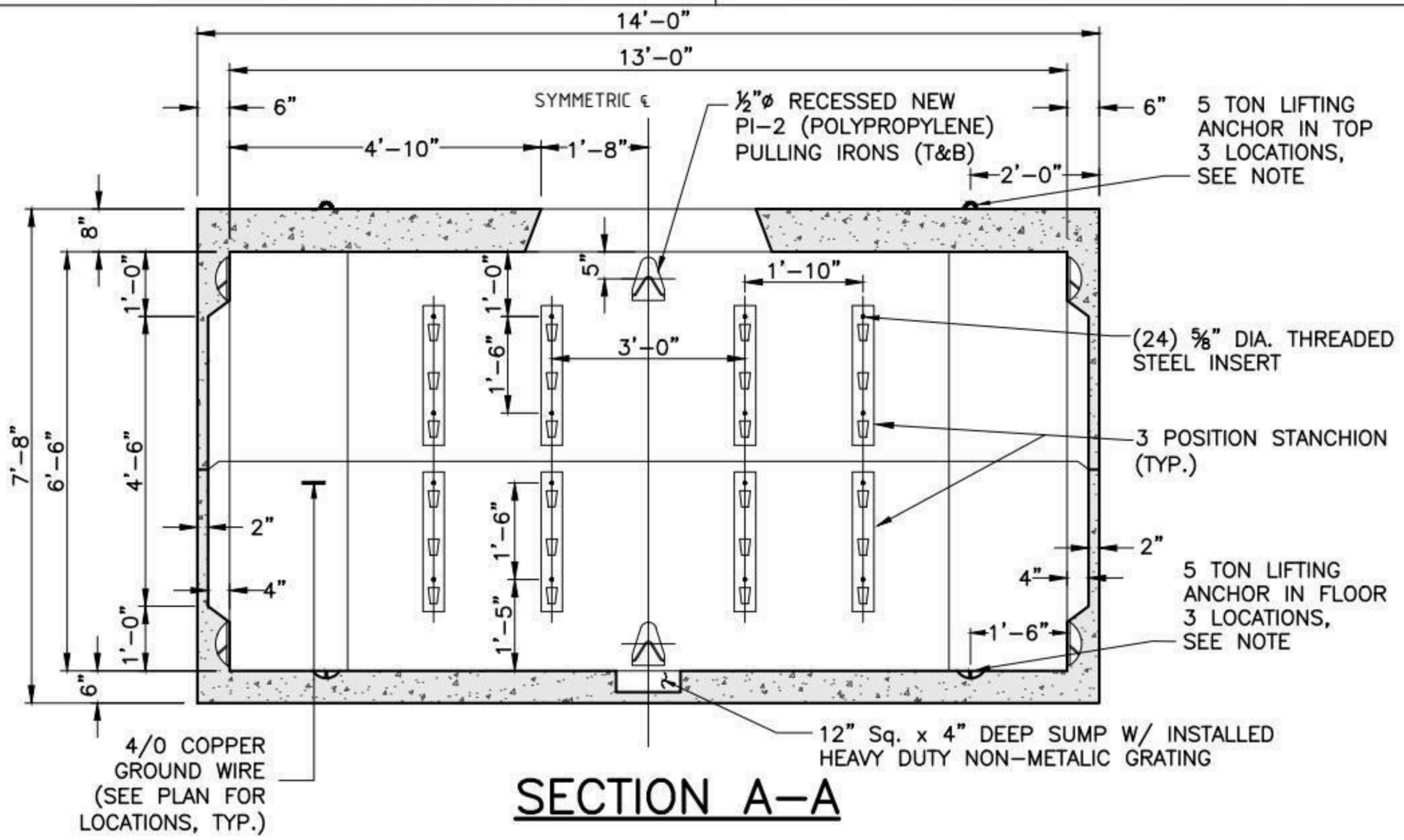

SECTION A-A

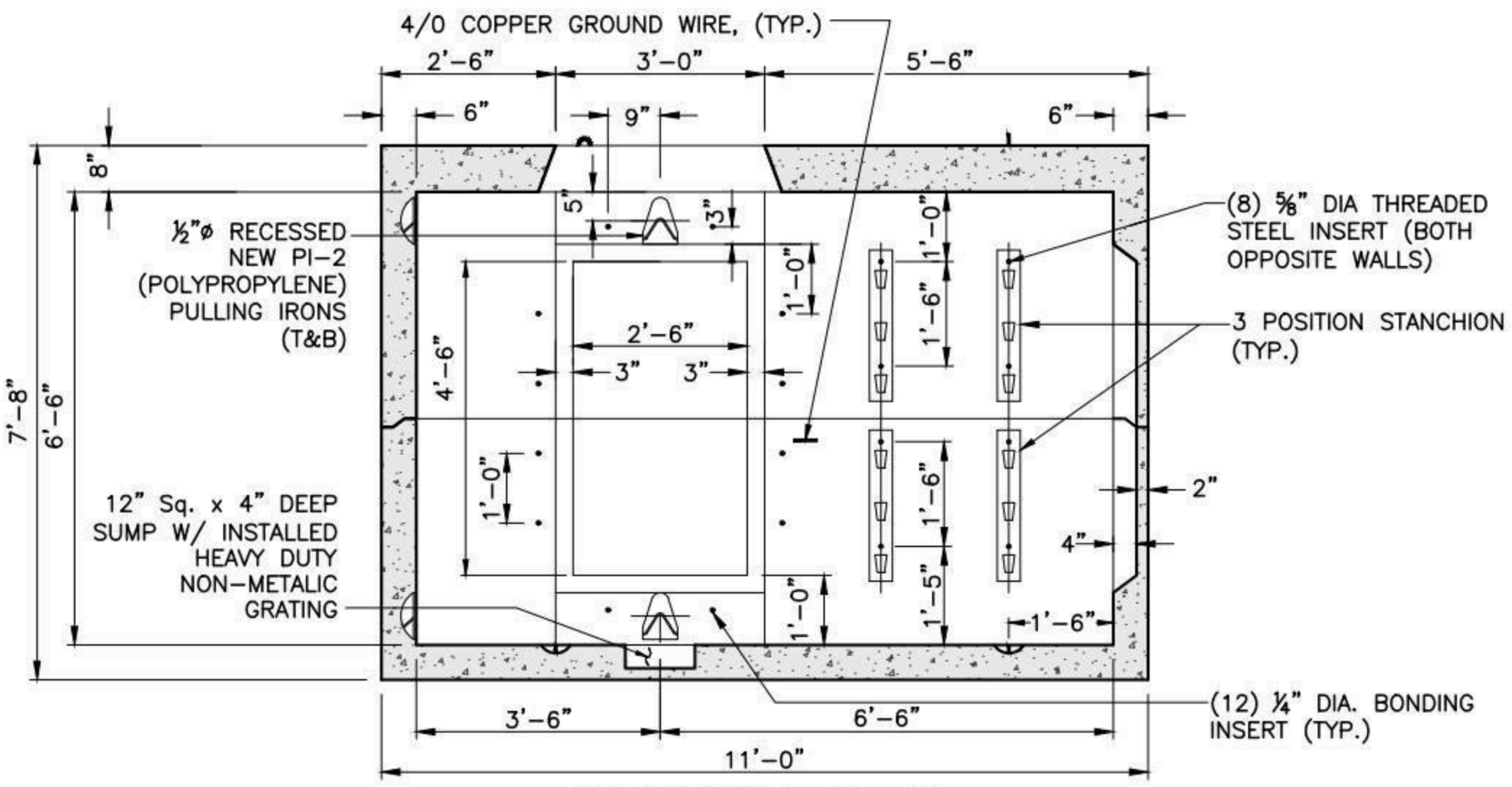

SECTION B-B

OPPOSITE WALLS ARE MIRROR IMAGES.

SHEA PRODUCT ID: NSM1211	FILE NAME: ES-MA M1211			NPCA CERTIFIED PLANT
WEIGHT (LBS): 40900	DRAWN BY: L.P.	DATE: 9/22/2017	PAGE: II.B.10-2	

Specifications subject to change without notice

SHEA CONCRETE PRODUCTS
New England's Premier Precaster
800-696-7432 (SHEA)
www.sheaconcrete.com
MAILING ADDRESS: 87 HAVERHILL RD AMESBURY, MA 01913

EVERSOURCE-MA MANHOLE
M1212 10' W X 13' L X 8' H

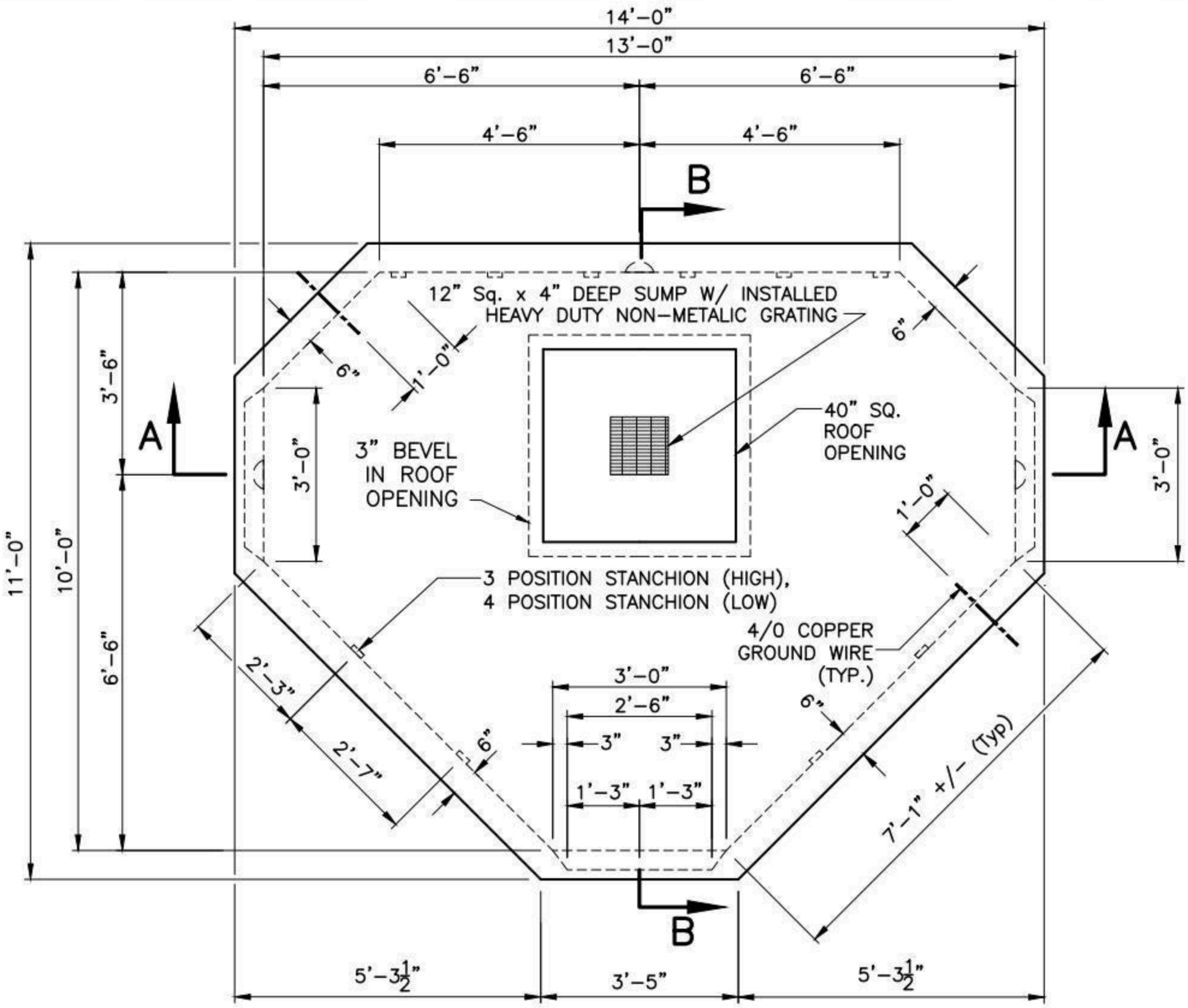

PLAN

NOTES:

1. CONCRETE: 5,000 PSI MINIMUM AFTER 28 DAYS.
2. DESIGN LOADING: AASHTO HS20-44, 0 TO 5 FEET COVER.
3. DESIGN SPECIFICATIONS – ACI 318 & AASHTO LOAD FACTOR DESIGN METHOD.
4. STEEL REINFORCEMENT CONFORMS TO ASTM A615, GRADE 60. MINIMUM STEEL COVER 1 ½".
5. ALL TERMINATORS SHALL HAVE BELL ENDS FLUSH WITH THE INSIDE WALL.
6. CONSTRUCTION JOINT SHALL BE SEALED WITH 1"ø BUTYL RUBBER OR APPROVED EQUAL.
7. RACKING/STANCHIONS SOLD SEPARATELY.

SHEA PRODUCT ID: NSM1212	FILE NAME: ES-MA M1212			NPCA CERTIFIED PLANT
WEIGHT (LBS): 45185	DRAWN BY: L.P.	DATE: 9/22/2017	PAGE: II.B.11-1	

Specifications subject to change without notice

SHEA CONCRETE PRODUCTS
New England's Premier Precaster
800-696-7432 (SHEA)
www.sheaconcrete.com
MAILING ADDRESS: 87 HAVERHILL RD AMESBURY, MA 01913

EVERSOURCE-MA MANHOLE
M1212 10' W X 13' L X 8' H

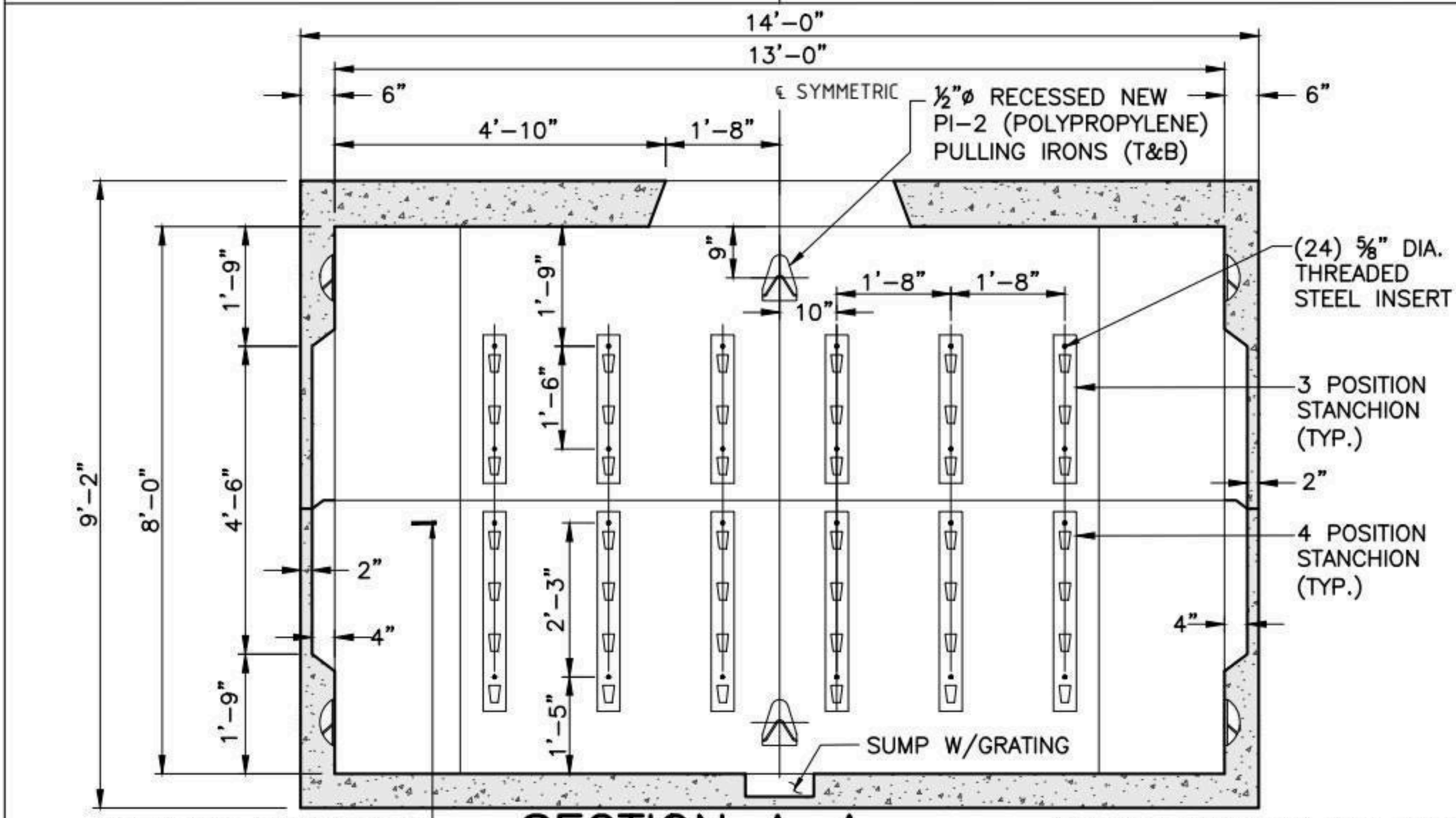

SECTION A-A

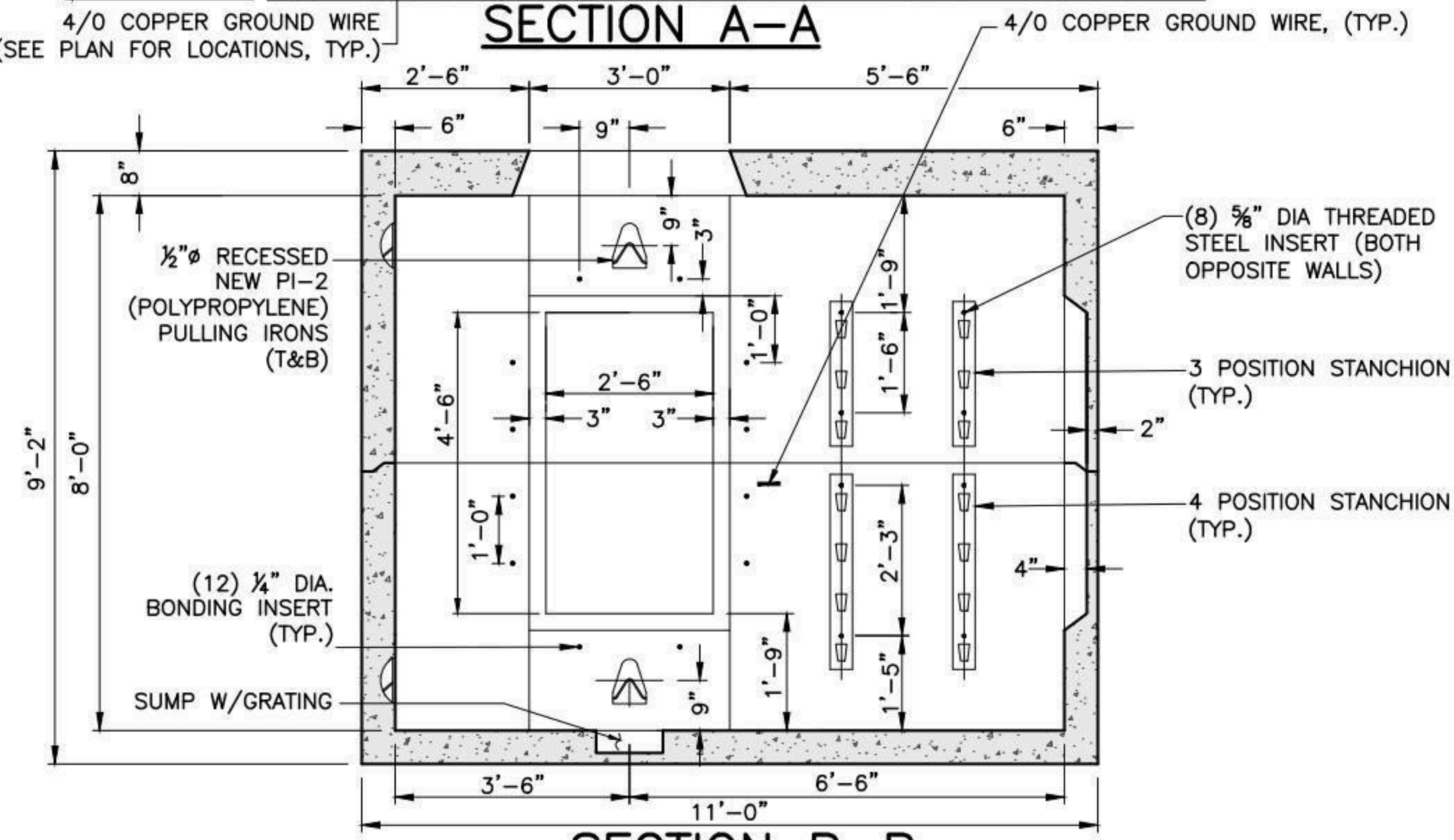

SECTION B-B

OPPOSITE WALLS ARE MIRROR IMAGES.

SHEA PRODUCT ID:	NSM1212	FILE NAME:	ES-MA M1212		
WEIGHT (LBS):	45185	DRAWN BY: L.P.	DATE: 9/22/2017	PAGE: II.B.11-2	

NPCA CERTIFIED PLANT

Specifications subject to change without notice

SHEA CONCRETE PRODUCTS
New England's Premier Precaster
800-696-7432 (SHEA)
www.sheaconcrete.com
MAILING ADDRESS: 87 HAVERHILL RD AMESBURY, MA 01913

EVERSOURCE-MA MANHOLE
M1214 8' W X 14' L X 8' H

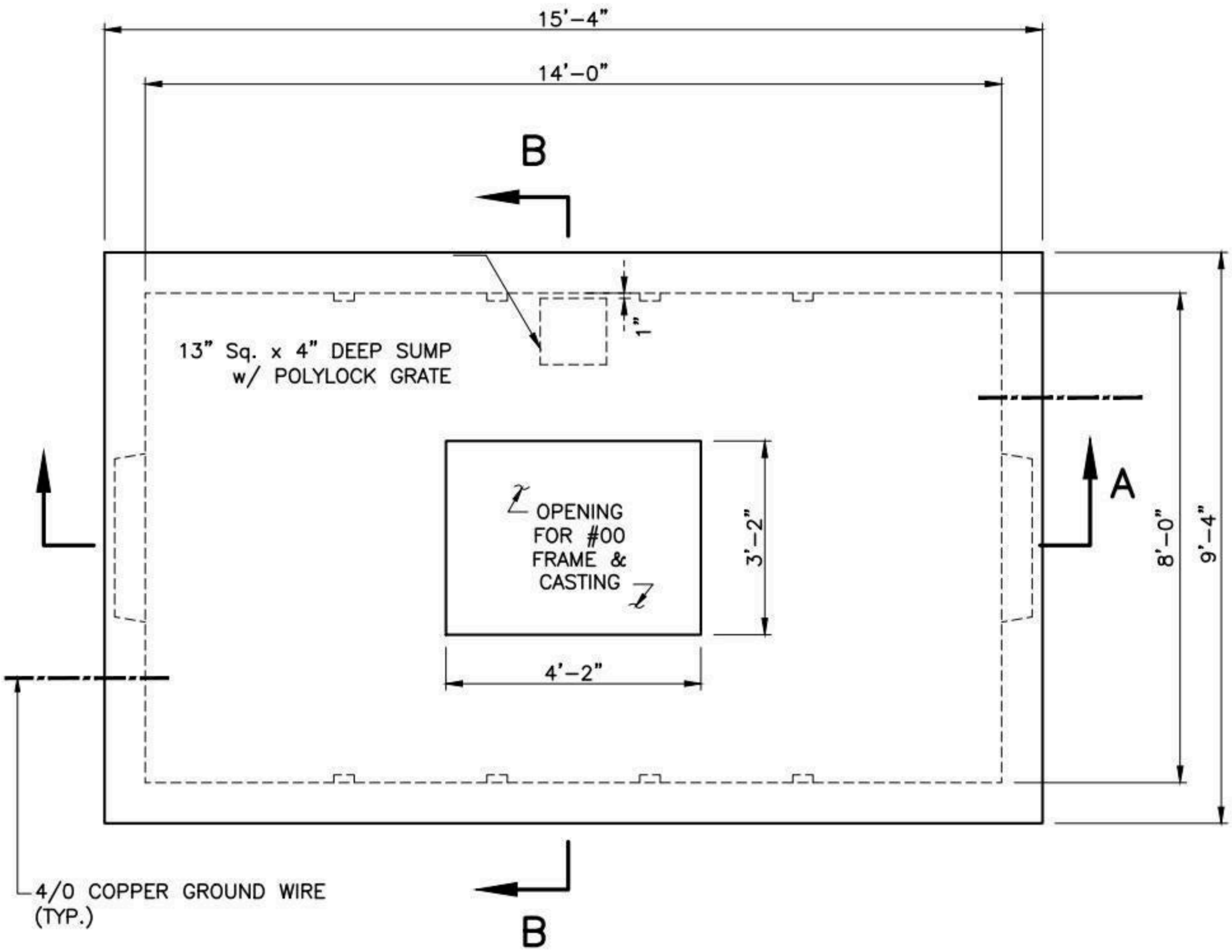

PLAN

NOTES:

1. CONCRETE: 5,000 PSI MINIMUM AFTER 28 DAYS.
2. DESIGN LOADING: AASHTO HS20-44, 0 TO 5 FEET COVER.
3. DESIGN SPECIFICATIONS – ACI 318 & AASHTO LOAD FACTOR DESIGN METHOD.
4. STEEL REINFORCEMENT CONFORMS TO ASTM A615, GRADE 60. MINIMUM STEEL COVER 1 ½".
5. ALL TERMINATORS SHALL HAVE BELL ENDS FLUSH WITH THE INSIDE WALL.
6. CONSTRUCTION JOINT SHALL BE SEALED WITH 1"ø BUTYL RUBBER OR APPROVED EQUAL.
7. RACKING/STANCHIONS SOLD SEPARATELY.

SHEA PRODUCT ID: NSM1214	FILE NAME: ES-MA M1214			NPCA CERTIFIED PLANT
WEIGHT (LBS): 62675	DRAWN BY: L.P.	DATE: 9/22/2017	PAGE: II.B.12-1	

Specifications subject to change without notice

SHEA CONCRETE PRODUCTS
New England's Premier Precaster
800-696-7432 (SHEA)
www.sheaconcrete.com
MAILING ADDRESS: 87 HAVERHILL RD AMESBURY, MA 01913

EVERSOURCE-MA MANHOLE
M1214 8' W X 14' L X 8' H

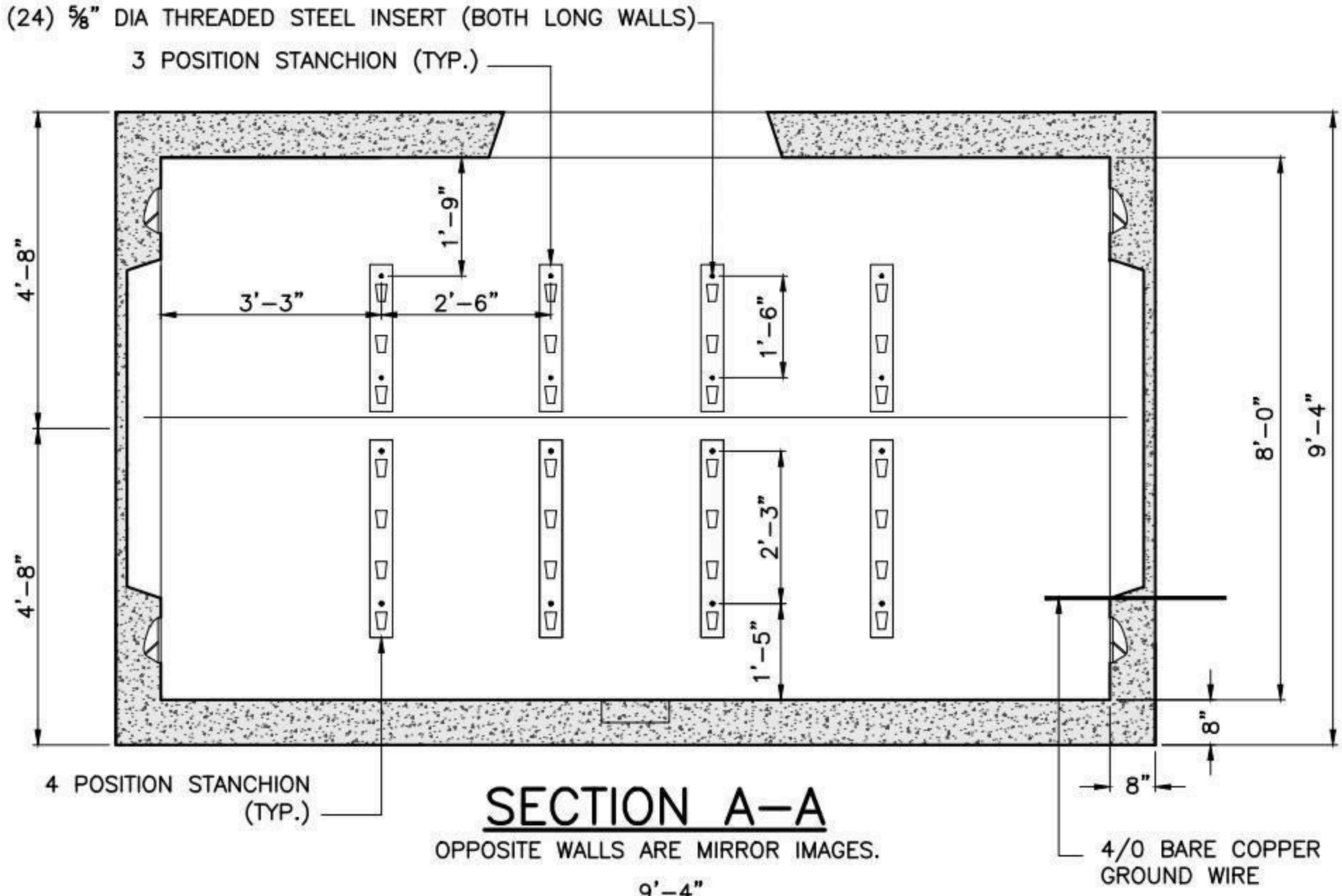

SECTION A-A

OPPOSITE WALLS ARE MIRROR IMAGES.

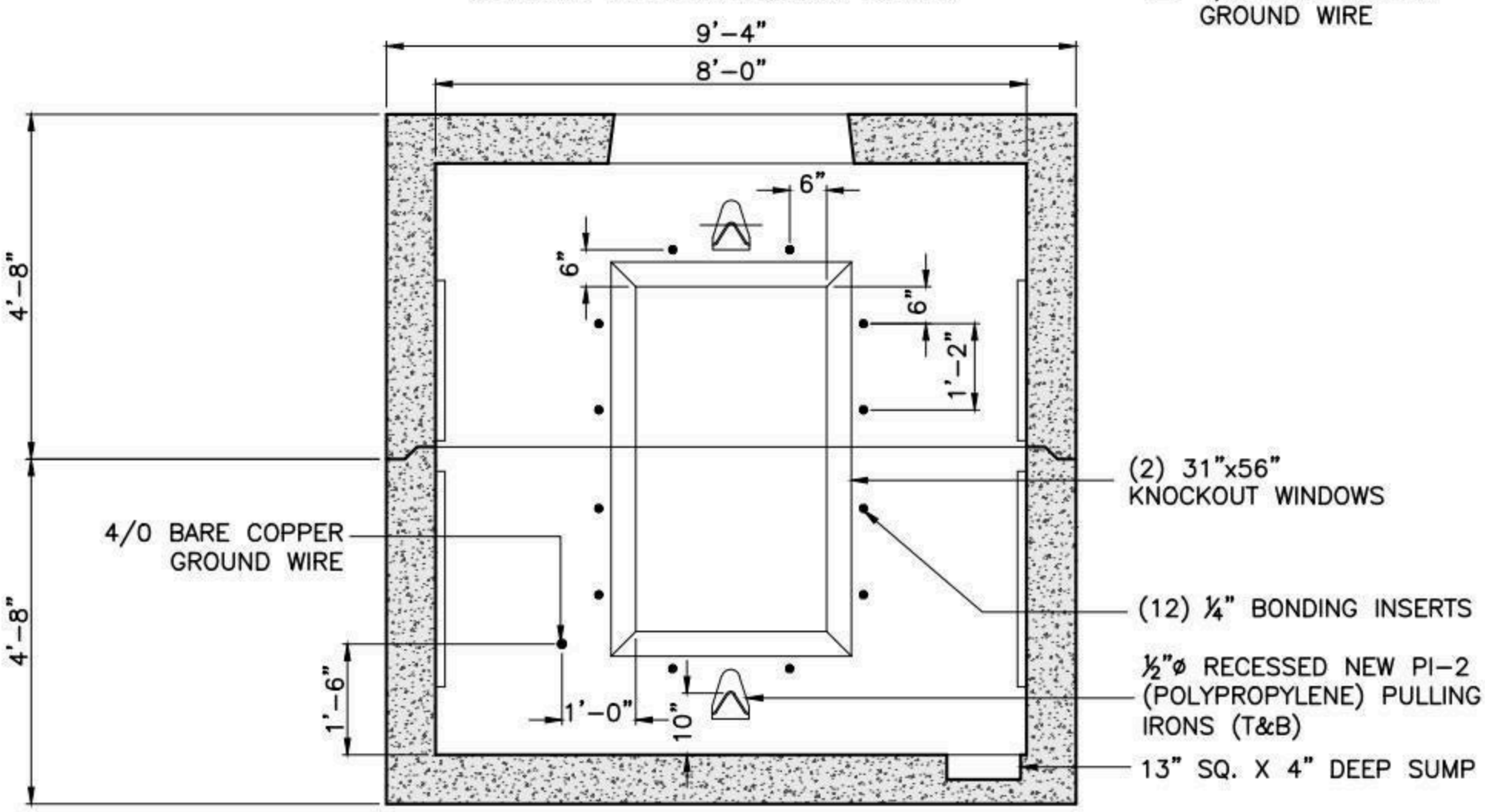

SECTION B-B

OPPOSITE WALLS ARE MIRROR IMAGES.

SHEA PRODUCT ID:	NSM1214	FILE NAME:	ES-MA M1214		
WEIGHT (LBS):	62675	DRAWN BY: L.P.	DATE: 9/22/2017	PAGE: II.B.12-2	

773 Salem Street-Wilmington, MA | 153 Cranberry Hwy-Rochester, MA | 87 Haverhill Road-Amesbury, MA | 160 Old Turnpike Rd-Nottingham, NH

Specifications subject to change without notice

SHEA CONCRETE PRODUCTS
New England's Premier Precaster
800-696-7432 (SHEA)
www.sheaconcrete.com
MAILING ADDRESS: 87 HAVERHILL RD AMESBURY, MA 01913

EVERSOURCE-MA MANHOLE
M1215 6'W X 13'L X 6'-6"H

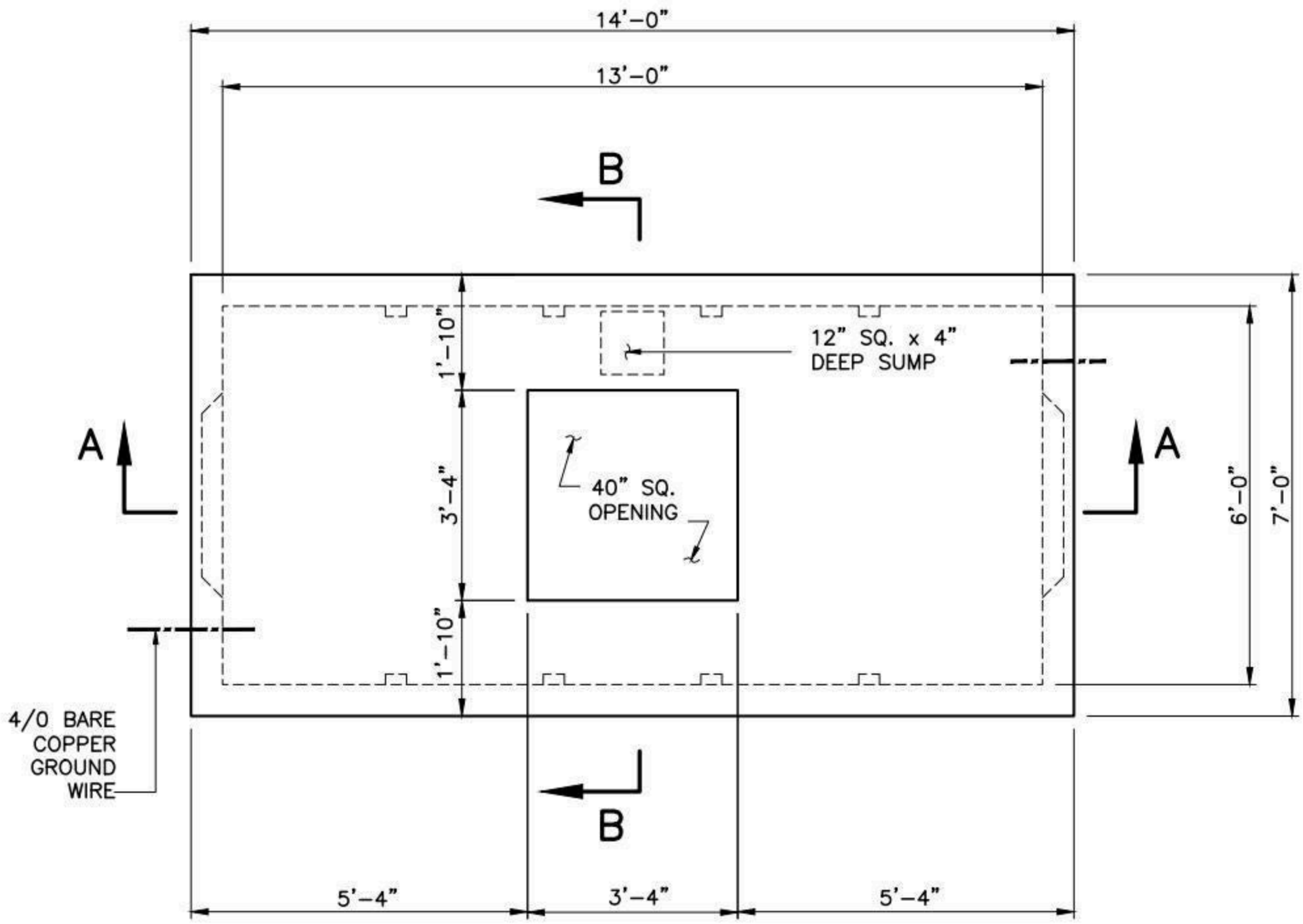

PLAN

NOTES:

1. CONCRETE: 5,000 PSI MINIMUM AFTER 28 DAYS.
2. DESIGN LOADING: AASHTO HS20-44, 0 TO 5 FEET COVER.
3. DESIGN SPECIFICATIONS – ACI 318 & AASHTO LOAD FACTOR DESIGN METHOD.
4. STEEL REINFORCEMENT CONFORMS TO ASTM A615, GRADE 60. MINIMUM STEEL COVER 1 ½".
5. ALL TERMINATORS SHALL HAVE BELL ENDS FLUSH WITH THE INSIDE WALL.
6. CONSTRUCTION JOINT SHALL BE SEALED WITH 1"ø BUTYL RUBBER OR APPROVED EQUAL.
7. RACKING/STANCHIONS SOLD SEPARATELY.

SHEA PRODUCT ID: NSM1215	FILE NAME: ES-MA M1215				NPCA CERTIFIED PLANT
WEIGHT (LBS): 34355	DRAWN BY: L.P.	DATE: 12/8/2017	PAGE: II.B.13-1		

Specifications subject to change without notice

SHEA CONCRETE PRODUCTS
New England's Premier Precaster
800-696-7432 (SHEA)
www.sheaconcrete.com
MAILING ADDRESS: 87 HAVERHILL RD AMESBURY, MA 01913

EVERSOURCE-MA MANHOLE
M1215 6'W X 13'L X 6'-6"H

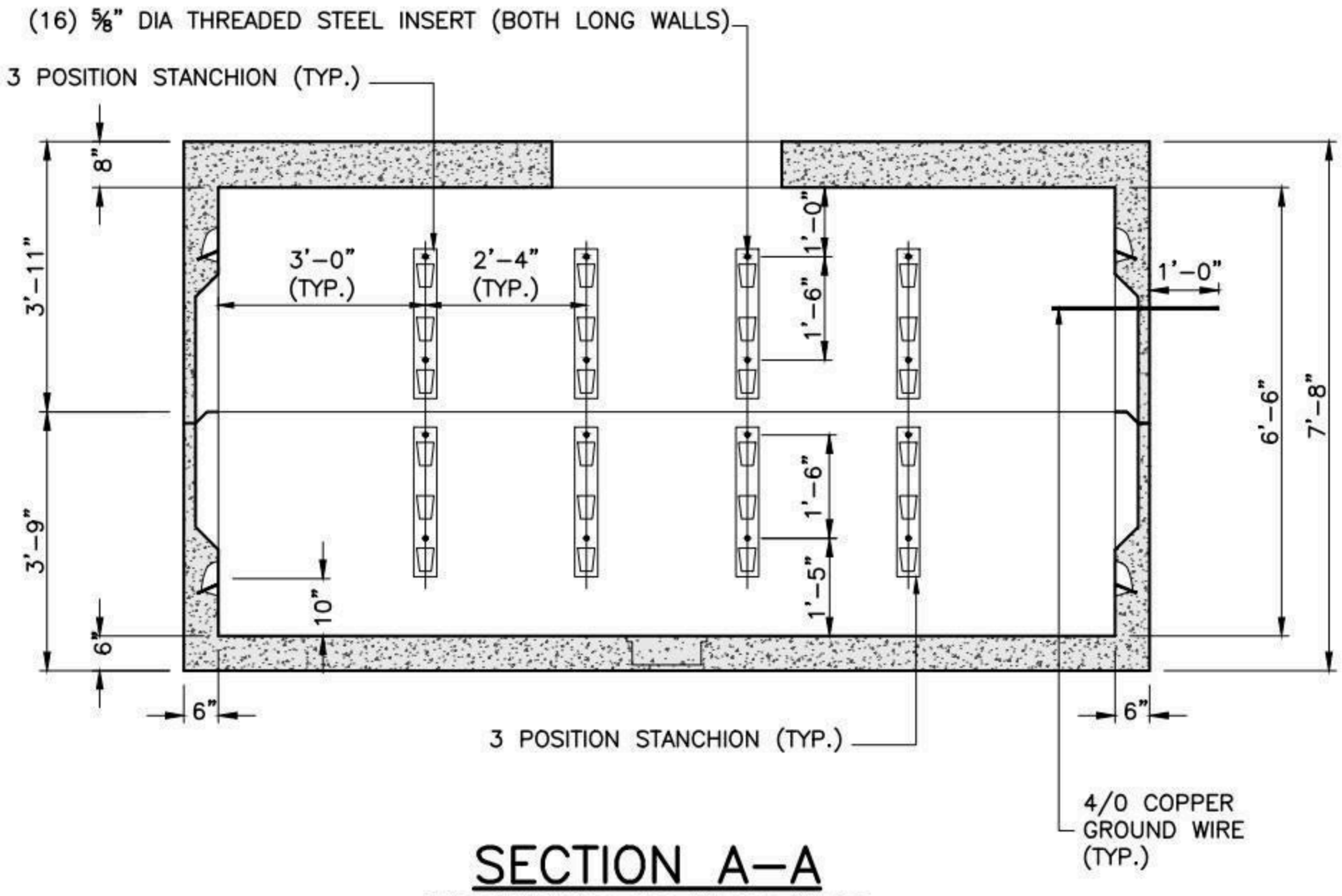

SECTION A-A

OPPOSITE WALLS ARE MIRROR IMAGES.

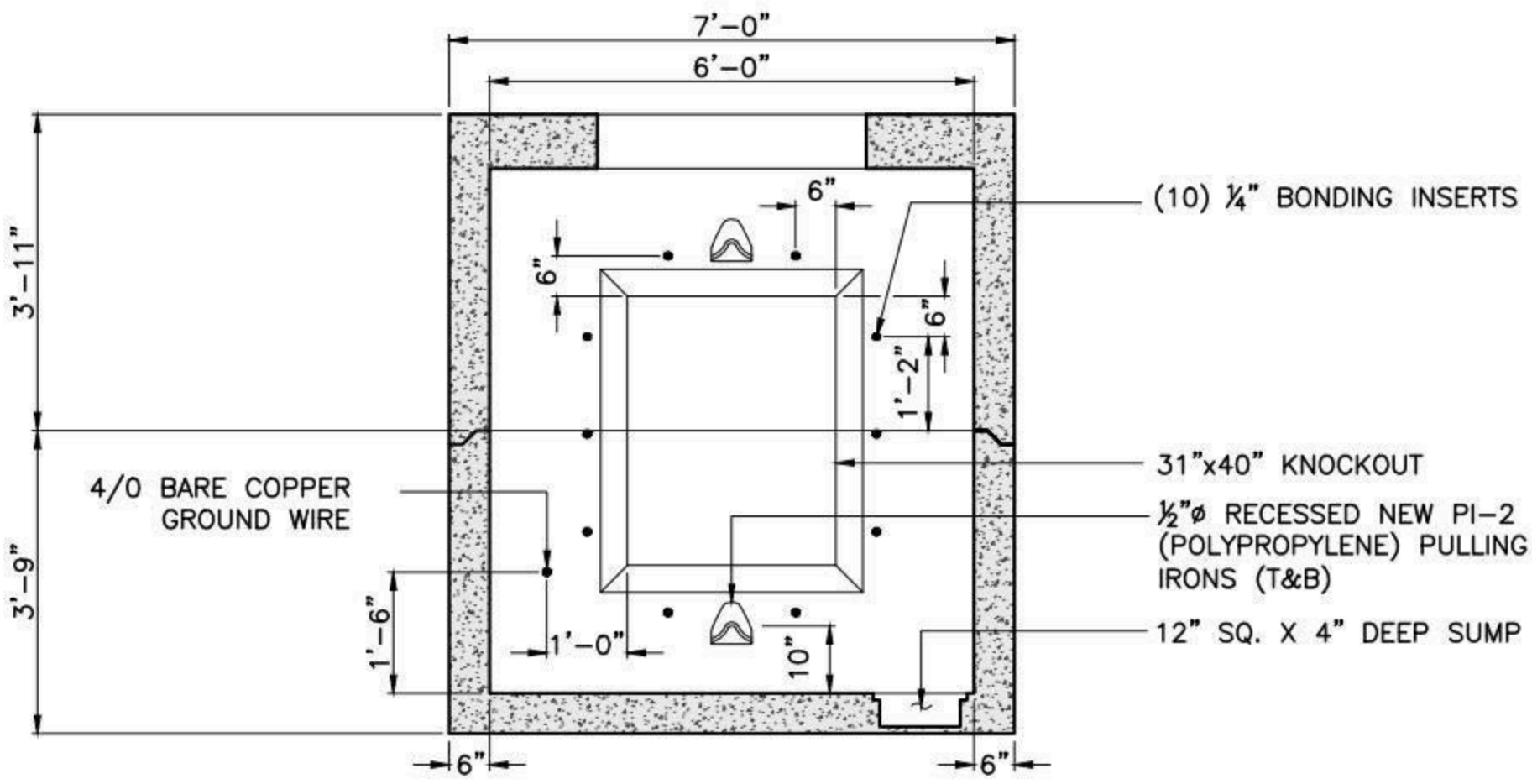

SECTION B-B

OPPOSITE WALLS ARE MIRROR IMAGES.

SHEA PRODUCT ID: NSM1215	FILE NAME: ES-MA M1215				
WEIGHT (LBS): 34355	DRAWN BY: L.P.	DATE: 12/8/2017	PAGE: II.B.13-2		

Specifications subject to change without notice

SHEA CONCRETE PRODUCTS
New England's Premier Precaster
800-696-7432 (SHEA)
www.sheaconcrete.com
MAILING ADDRESS: 87 HAVERHILL RD AMESBURY, MA 01913

EVERSOURCE-MA MANHOLE
M1216 5' W X 5' L X 5' H

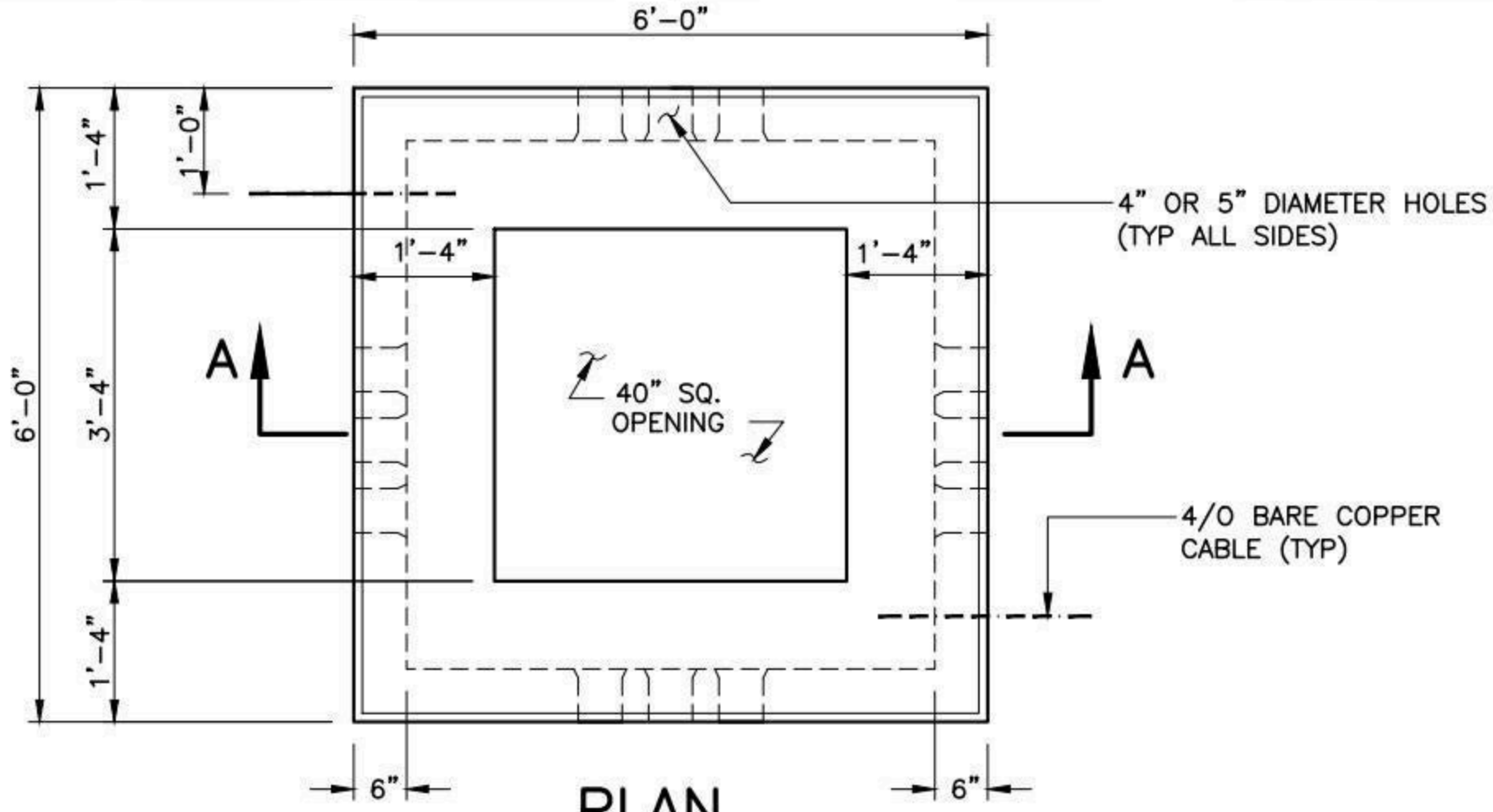

PLAN

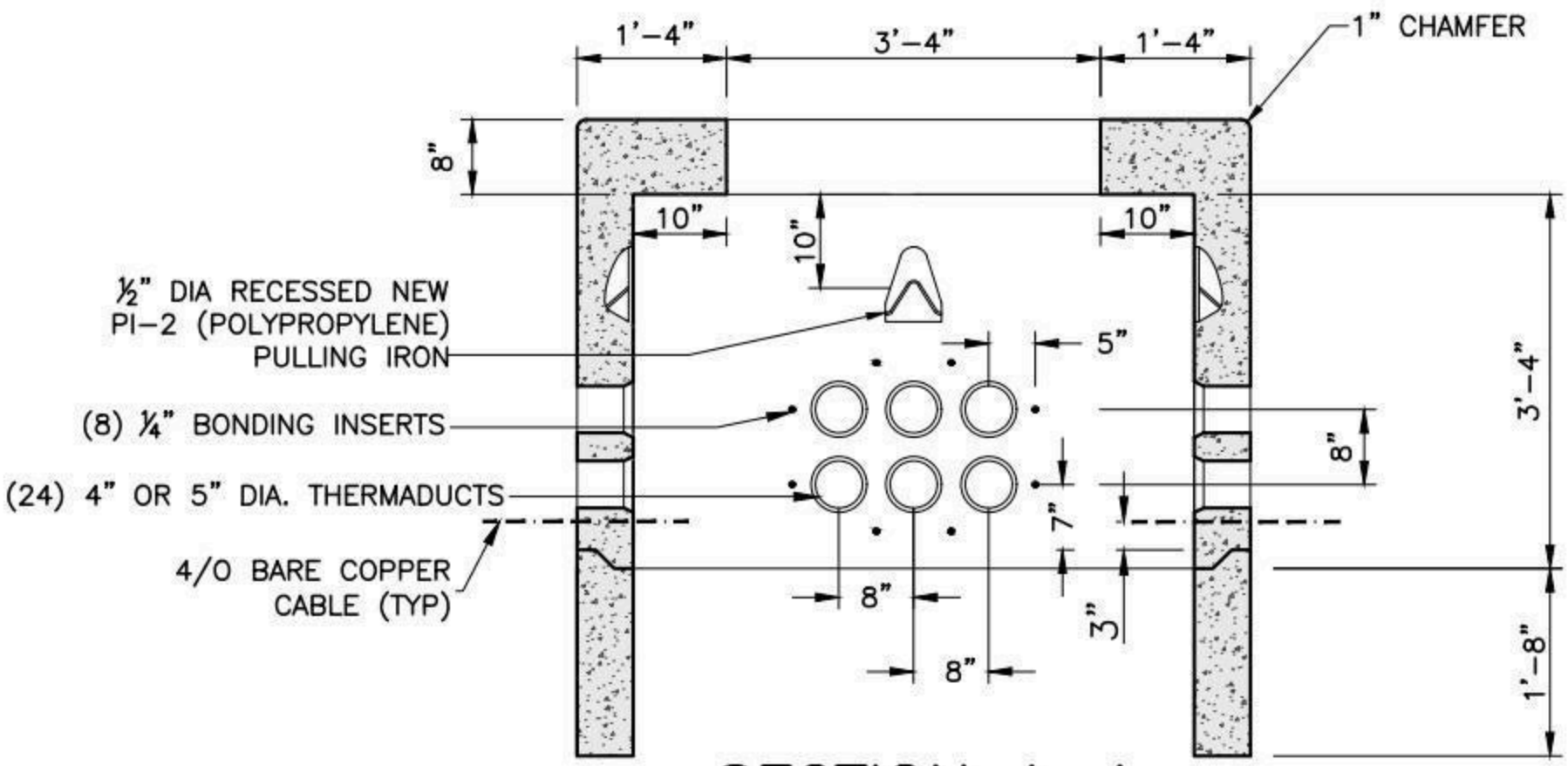

SECTION A-A
TYPICAL WALLS ELEVATION

NOTES:

1. CONCRETE: 5,000 PSI MINIMUM AFTER 28 DAYS.
2. DESIGN LOADING: AASHTO HS20-44, 0 TO 5 FEET COVER.
3. DESIGN SPECIFICATIONS – ACI 318 & AASHTO LOAD FACTOR DESIGN METHOD.
4. STEEL REINFORCEMENT CONFORMS TO ASTM A615, GRADE 60. MINIMUM STEEL COVER 1 ½".
5. ALL TERMINATORS SHALL HAVE BELL ENDS FLUSH WITH THE INSIDE WALL.

SHEA PRODUCT ID: NSM1216	FILE NAME: ES-MA M1216			NPCA CERTIFIED PLANT
WEIGHT (LBS): 10400	DRAWN BY: L.P.	DATE: 12/8/2017	PAGE: II.B.14	

Specifications subject to change without notice

SHEA CONCRETE PRODUCTS
New England's Premier Precaster
800-696-7432 (SHEA)
www.sheaconcrete.com
MAILING ADDRESS: 87 HAVERHILL RD AMESBURY, MA 01913

EVERSOURCE-MA MANHOLE
M1220 5'W X 5'L X 4'-6H

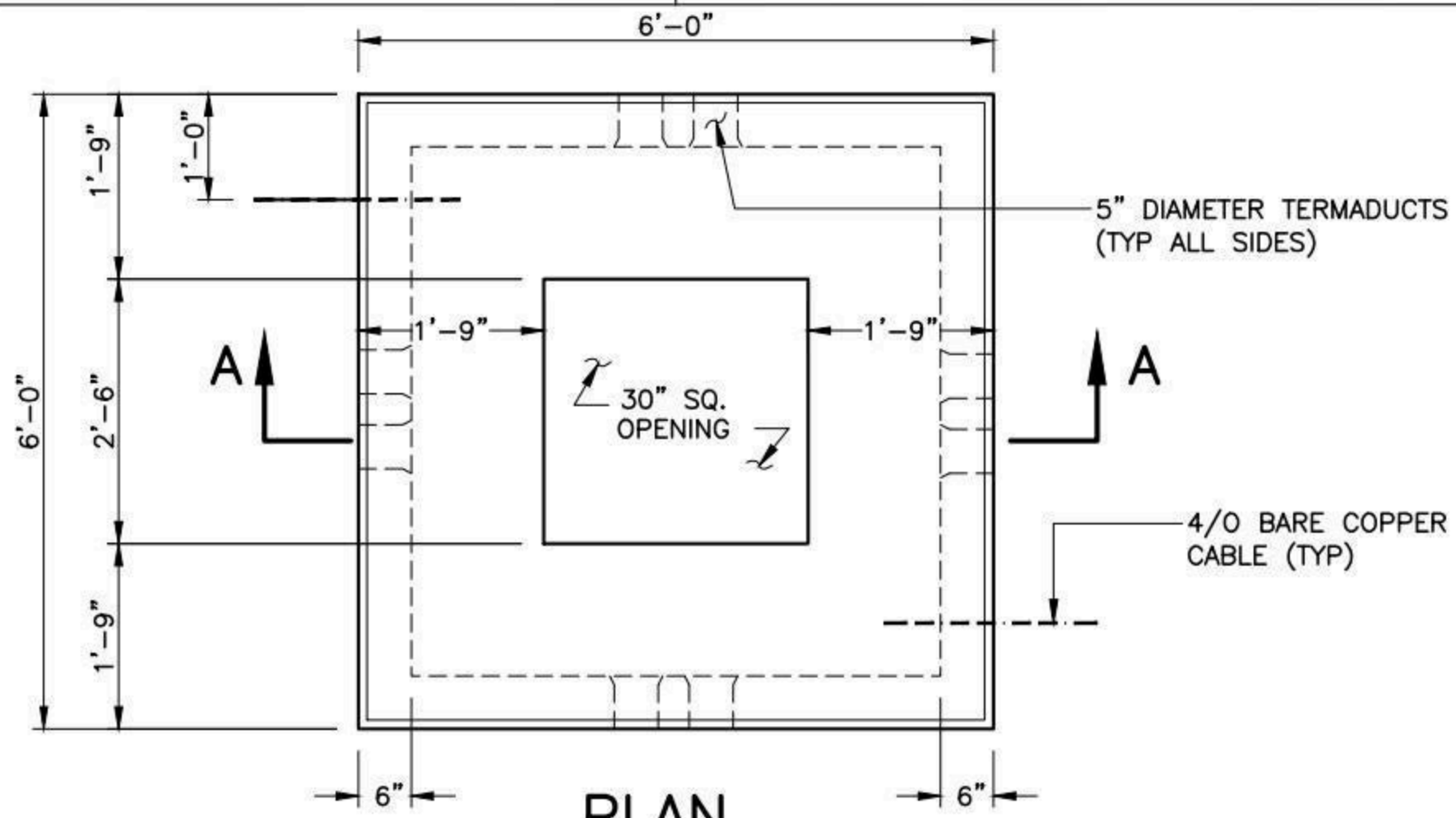

PLAN

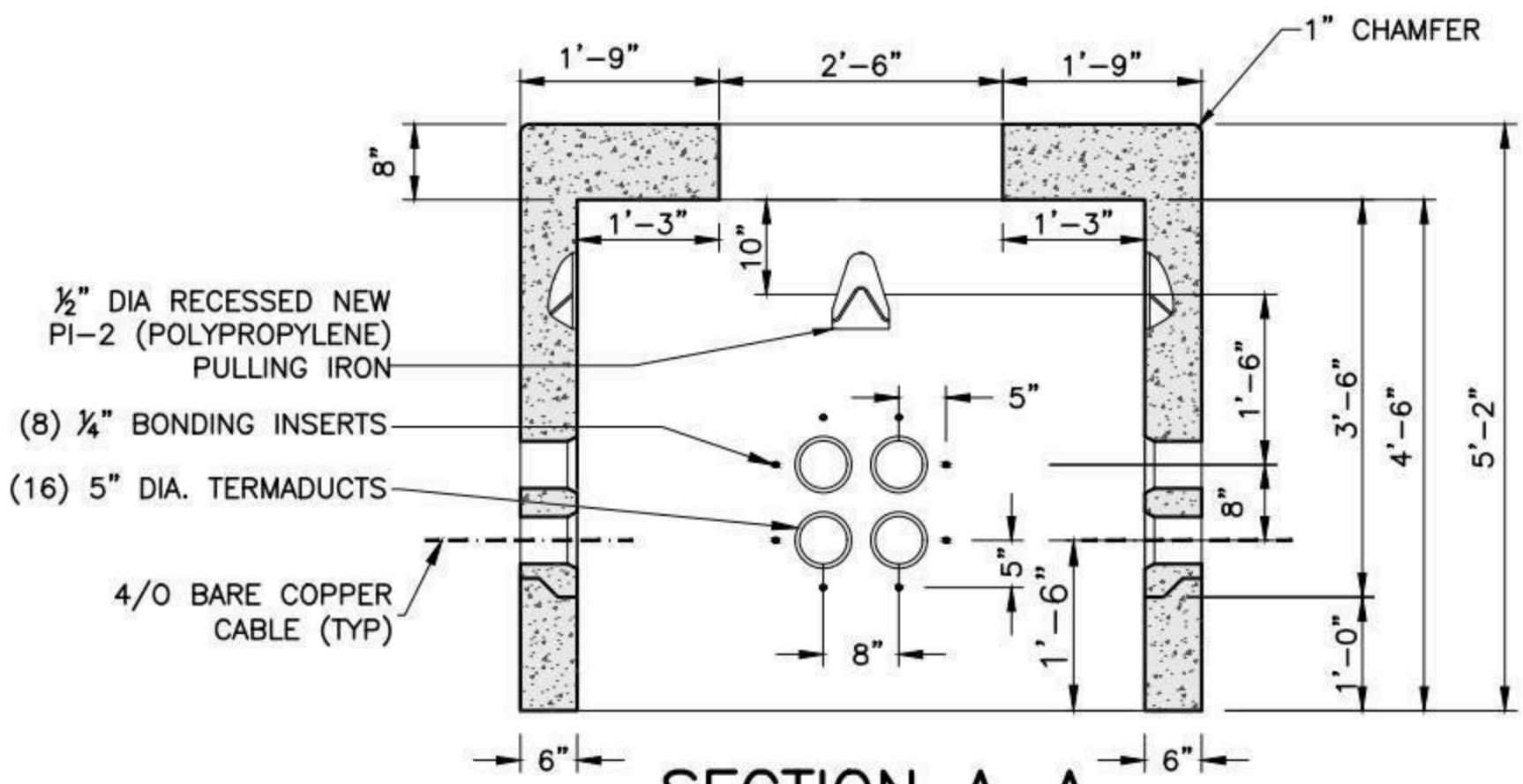

SECTION A-A

TYPICAL WALLS ELEVATION

NOTES:

1. CONCRETE: 5,000 PSI MINIMUM AFTER 28 DAYS.
2. DESIGN LOADING: AASHTO HS20-44, 0 TO 5 FEET COVER.
3. DESIGN SPECIFICATIONS – ACI 318 & AASHTO LOAD FACTOR DESIGN METHOD.
4. STEEL REINFORCEMENT CONFORMS TO ASTM A615, GRADE 60. MINIMUM STEEL COVER 1 ½".
5. ALL TERMINATORS SHALL HAVE BELL ENDS FLUSH WITH THE INSIDE WALL.

SHEA PRODUCT ID: NSM1220	FILE NAME: ES-MA M1220				NPCA CERTIFIED PLANT
WEIGHT (LBS): 9585	DRAWN BY: L.P.	DATE: 12/18/2017	PAGE: II.B.15		

Specifications subject to change without notice

SHEA CONCRETE PRODUCTS
New England's Premier Precaster
800-696-7432 (SHEA)
www.sheaconcrete.com
MAILING ADDRESS: 87 HAVERHILL RD AMESBURY, MA 01913

EVERSOURCE-MA XFMR PAD
3801-1 6' X 6'-6" X 12"

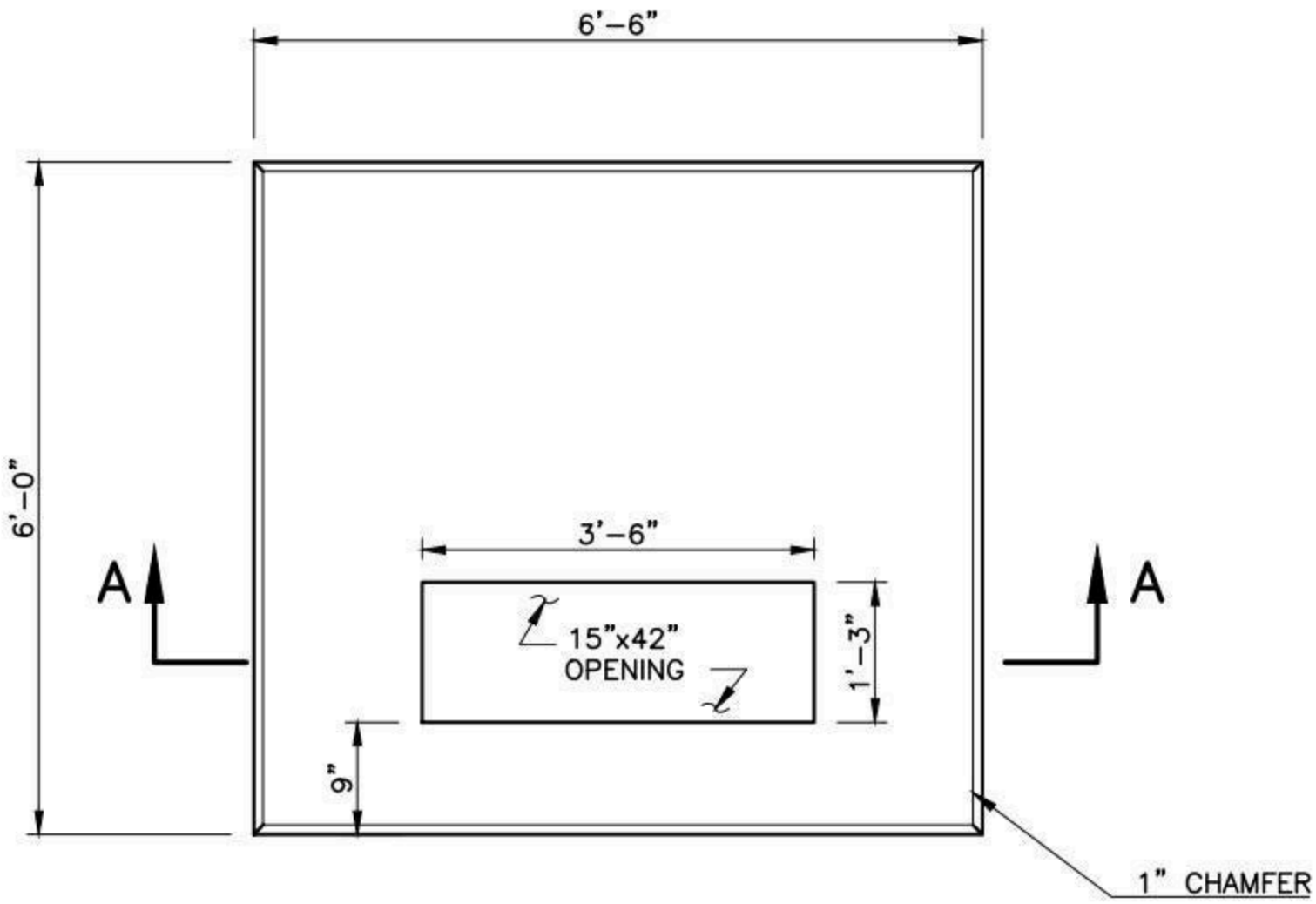

PLAN

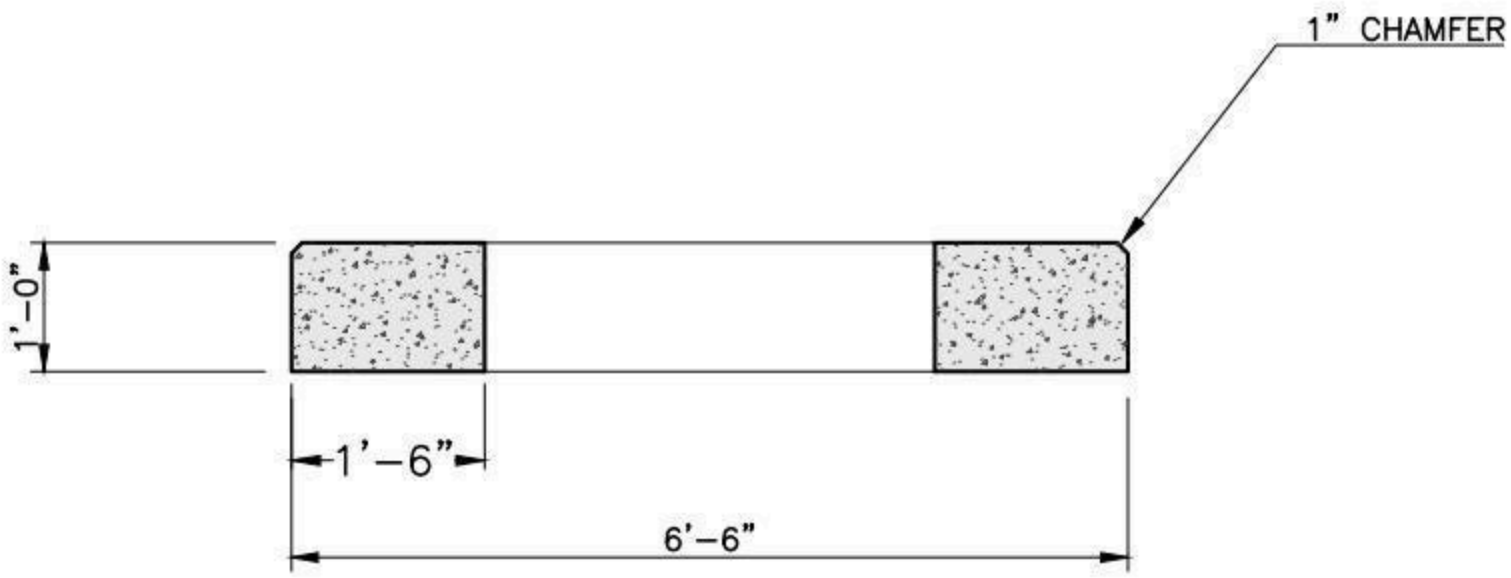

SECTION A-A

NOTES:

1. CONCRETE: 5,000 PSI MINIMUM AFTER 28 DAYS.
2. DESIGN LOADING: AASHTO HS20-44, 0 TO 5 FEET COVER.
3. DESIGN SPECIFICATIONS - ACI 318 & AASHTO LOAD FACTOR DESIGN METHOD.
4. STEEL REINFORCEMENT CONFORMS TO ASTM A615, GRADE 60. MINIMUM STEEL COVER 1 ½".

SHEA PRODUCT ID: NSTP3801-1	FILE NAME: ES-MA TP 3801-1			NPCA CERTIFIED PLANT
WEIGHT (LBS): 5655	DRAWN BY: L.P.	DATE: 12/18/2017	PAGE: II.C.1	

Specifications subject to change without notice

SHEA CONCRETE PRODUCTS
New England's Premier Precaster
800-696-7432 (SHEA)
www.sheaconcrete.com
MAILING ADDRESS: 87 HAVERHILL RD AMESBURY, MA 01913

EVERSOURCE-MA XFMR PAD 3801-2 8' X 8' X 12"

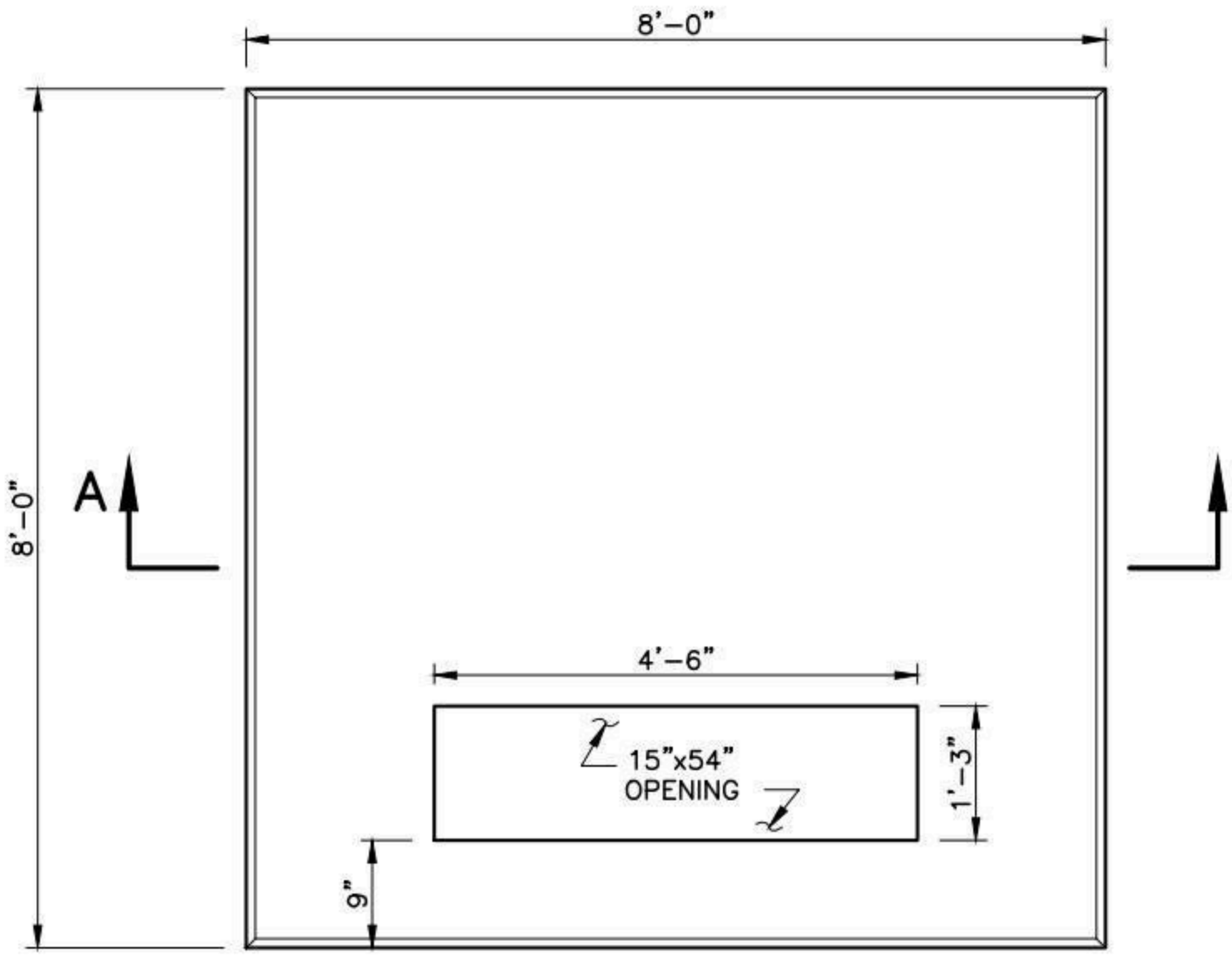

PLAN

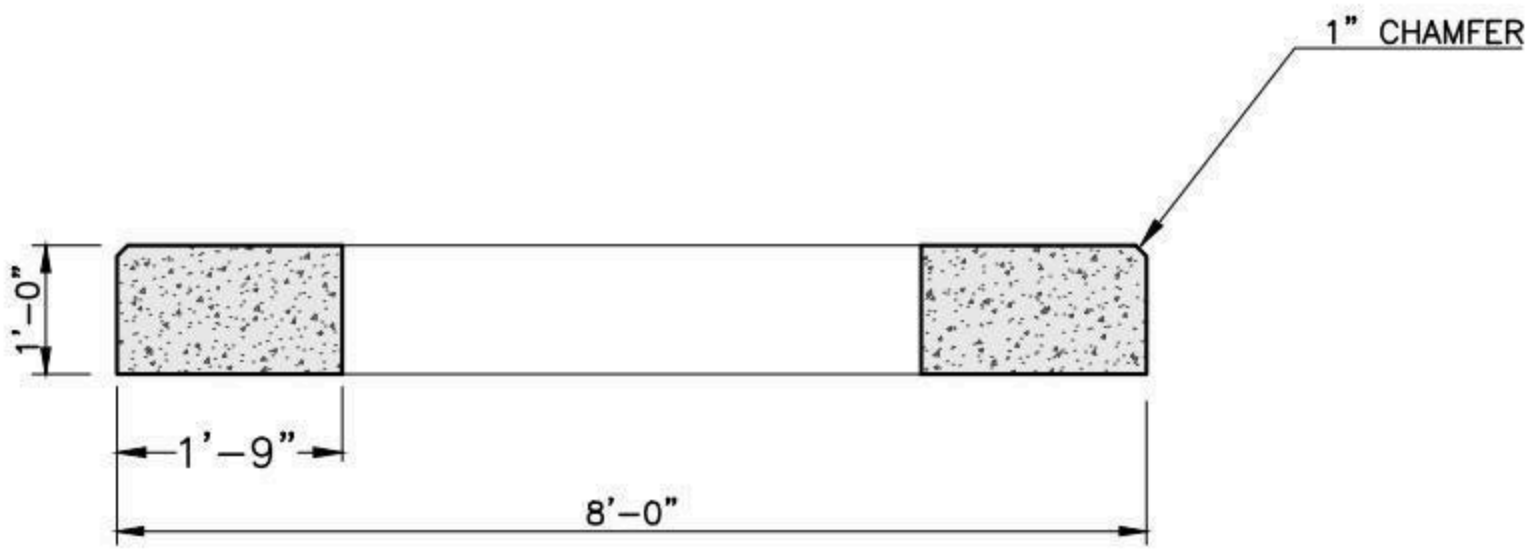

SECTION A-A

NOTES:

1. CONCRETE: 5,000 PSI MINIMUM AFTER 28 DAYS.
2. DESIGN LOADING: AASHTO HS20-44, 0 TO 5 FEET COVER.
3. DESIGN SPECIFICATIONS - ACI 318 & AASHTO LOAD FACTOR DESIGN METHOD.
4. STEEL REINFORCEMENT CONFORMS TO ASTM A615, GRADE 60. MINIMUM STEEL COVER 1 ½".

SHEA PRODUCT ID: NSTP3801-2	FILE NAME: ES-MA TP 3801-2			NPCA CERTIFIED PLANT
WEIGHT (LBS): 9280	DRAWN BY: L.P.	DATE: 12/18/2017	PAGE: II.C.2	

Specifications subject to change without notice

SHEA CONCRETE PRODUCTS
New England's Premier Precaster
800-696-7432 (SHEA)
www.sheaconcrete.com
MAILING ADDRESS: 87 HAVERHILL RD AMESBURY, MA 01913

EVERSOURCE-MA XFMR PAD 3803
6'-5" X 7' X 12"

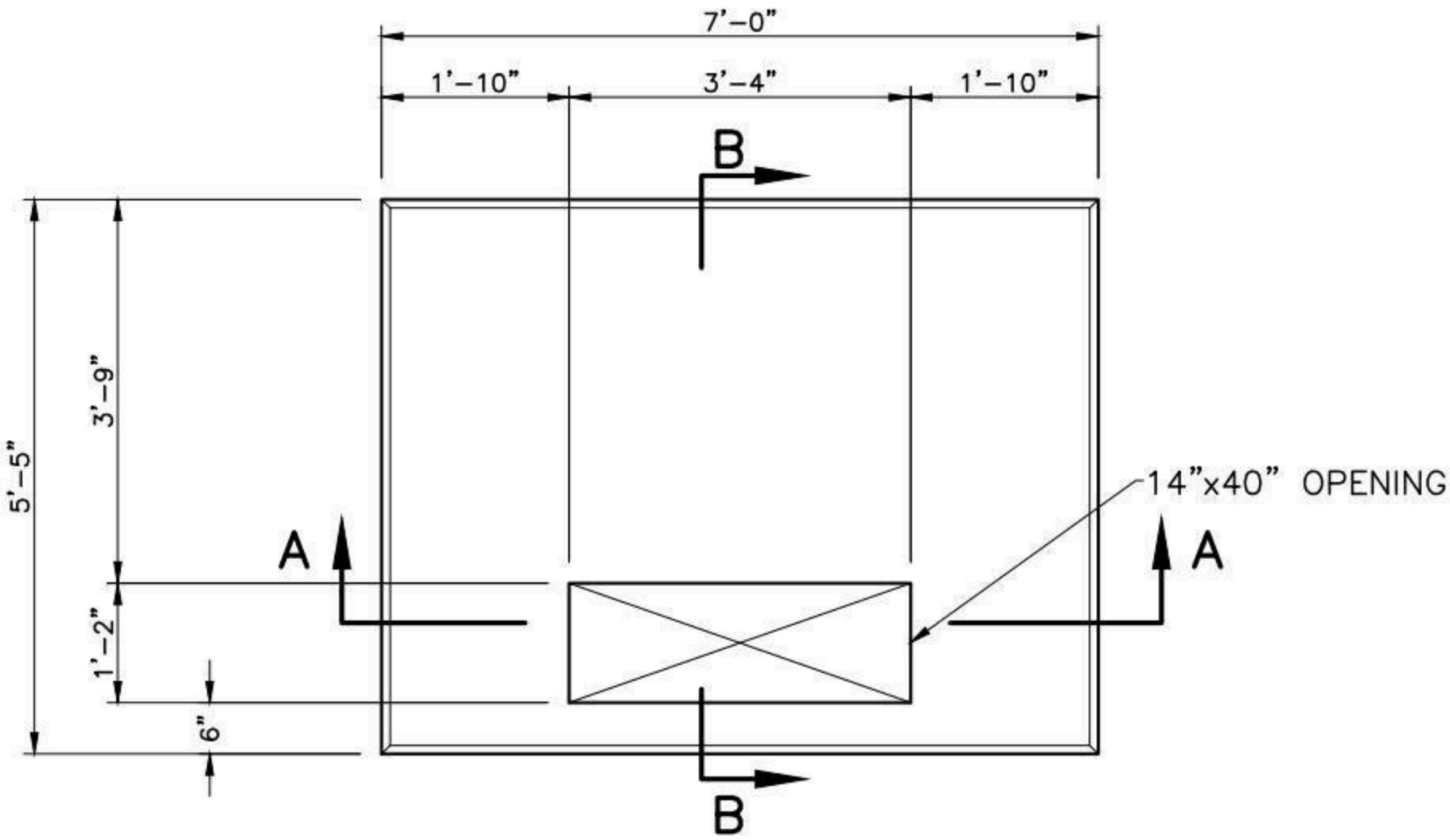

PLAN

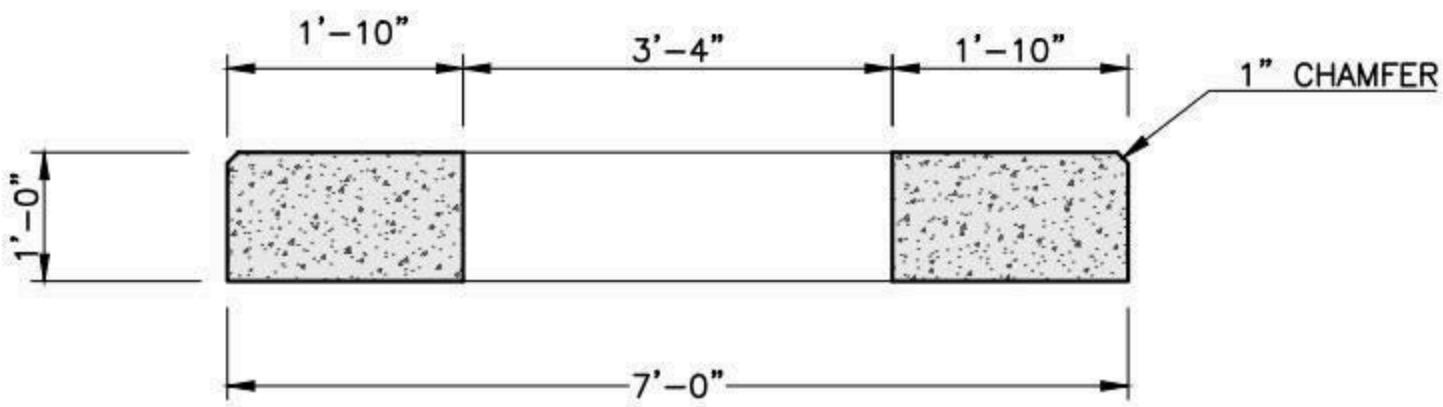

SECTION A-A

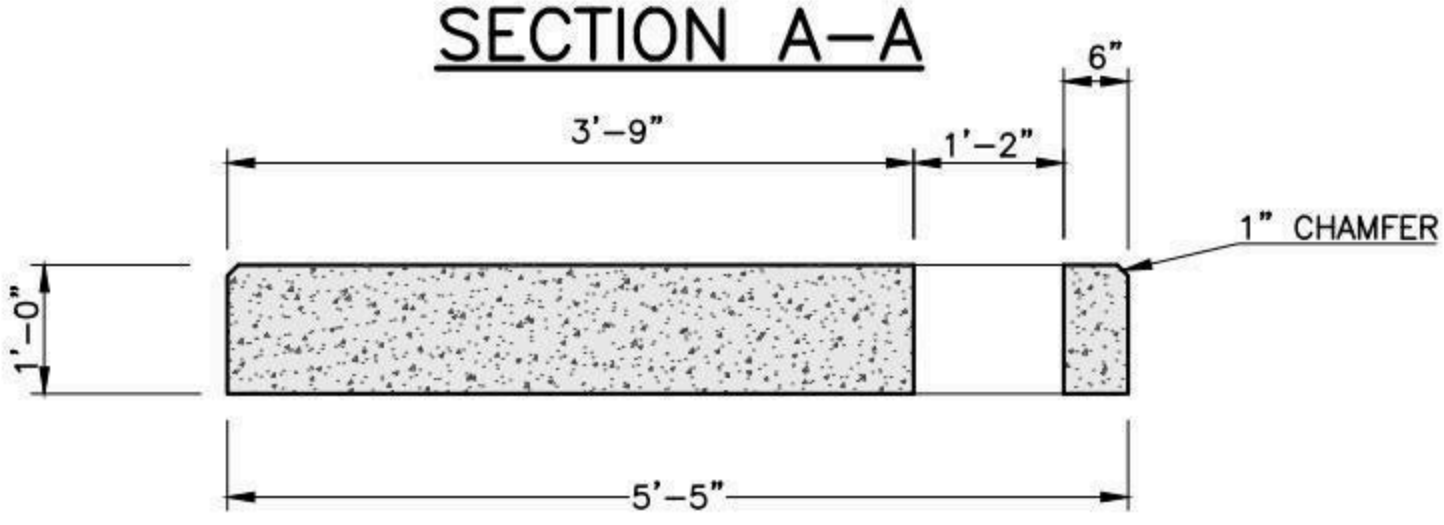

SECTION B-B

NOTES:

1. CONCRETE: 5,000 PSI MINIMUM AFTER 28 DAYS.
2. DESIGN LOADING: AASHTO HS20-44, 0 TO 5 FEET COVER.
3. DESIGN SPECIFICATIONS - ACI 318 & AASHTO LOAD FACTOR DESIGN METHOD.
4. STEEL REINFORCEMENT CONFORMS TO ASTM A615, GRADE 60. MINIMUM STEEL COVER 1 ½".

SHEA PRODUCT ID:	NSTP3803	FILE NAME:	ES-MA TP 3803		
WEIGHT (LBS):	5500	DRAWN BY: L.P.	DATE: 12/19/2017	PAGE: II.C.3	NPCA CERTIFIED PLANT

Specifications subject to change without notice

SHEA CONCRETE PRODUCTS
New England's Premier Precaster
800-696-7432 (SHEA)
www.sheaconcrete.com
MAILING ADDRESS: 87 HAVERHILL RD AMESBURY, MA 01913

EVERSOURCE-MA XFMR PAD
3808 6'-5" X 7'-2" X 12"

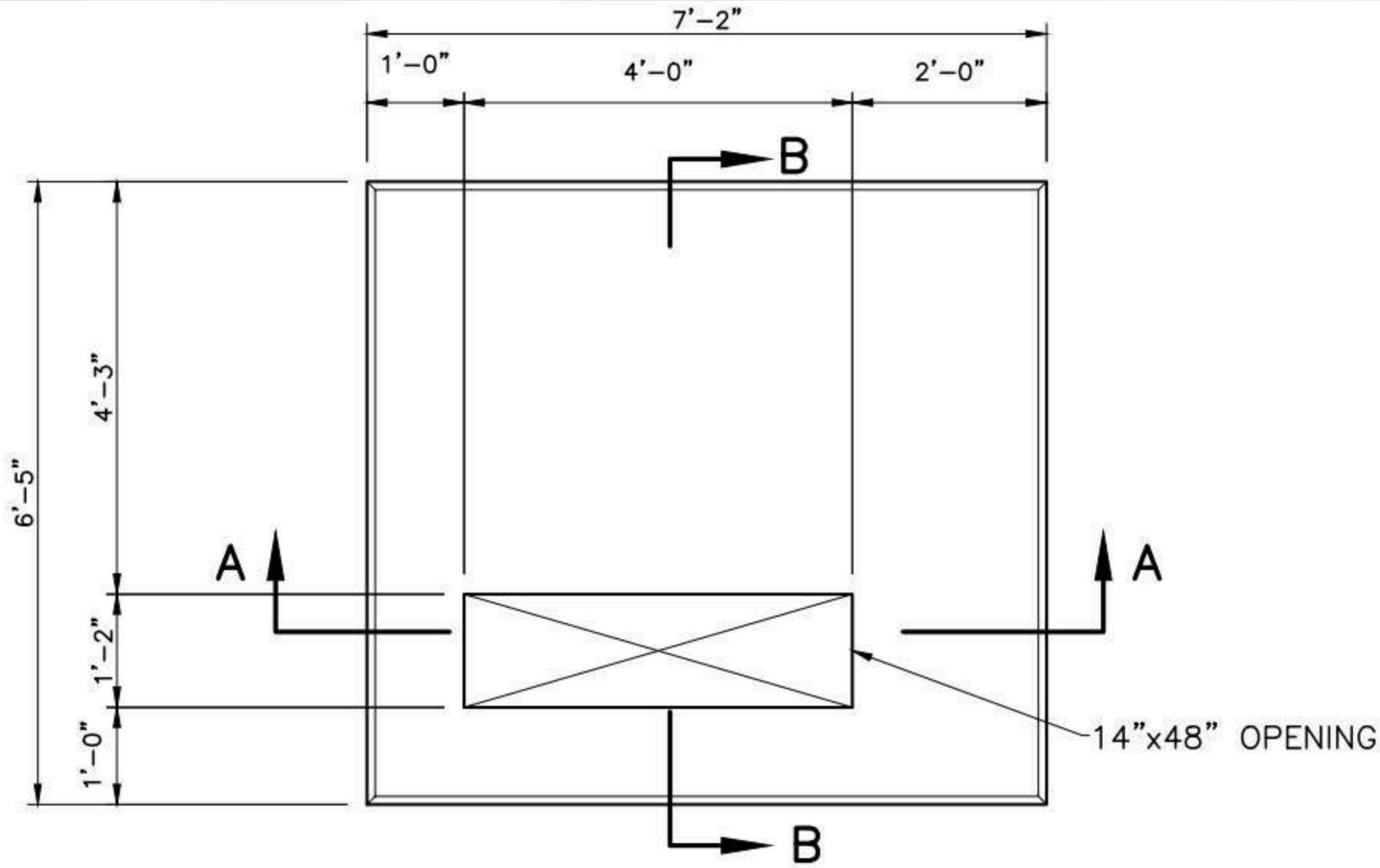

PLAN

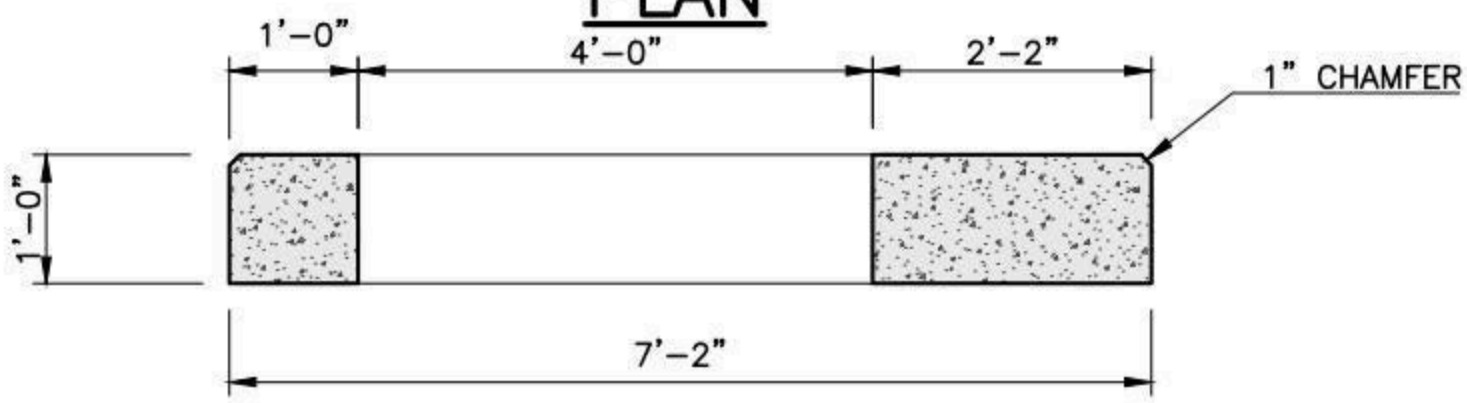

SECTION A-A

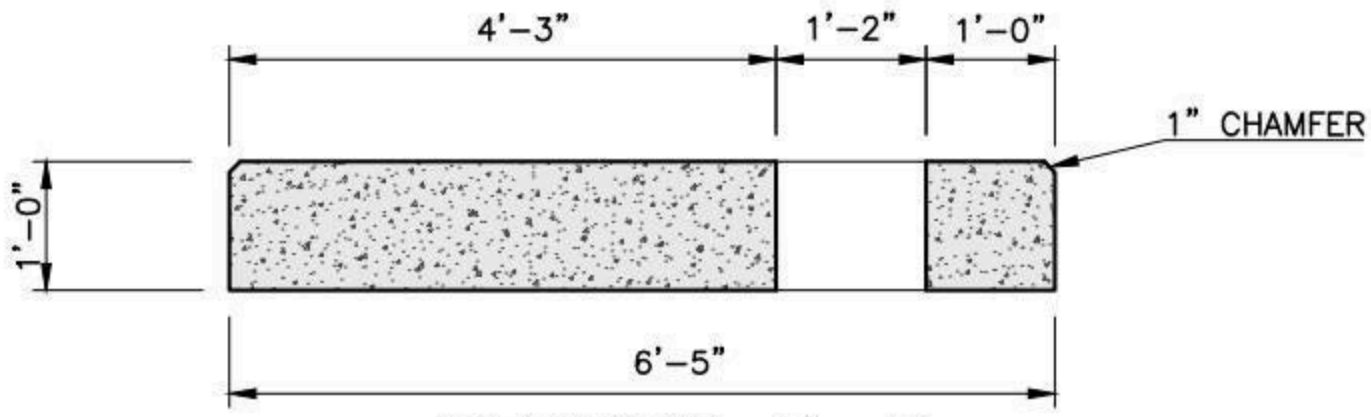

SECTION B-B

NOTES:

1. CONCRETE: 5,000 PSI MINIMUM AFTER 28 DAYS.
2. DESIGN LOADING: AASHTO HS20-44, 0 TO 5 FEET COVER.
3. DESIGN SPECIFICATIONS – ACI 318 & AASHTO LOAD FACTOR DESIGN METHOD.
4. STEEL REINFORCEMENT CONFORMS TO ASTM A615, GRADE 60. MINIMUM STEEL COVER 1 ½".

SHEA PRODUCT ID:	NSTP3808	FILE NAME:	ES-MA TP 3808		
WEIGHT (LBS):	6675	DRAWN BY: L.P.	DATE: 12/19/2017	PAGE: II.C.4	

NPCA CERTIFIED PLANT

Specifications subject to change without notice

SHEA CONCRETE PRODUCTS
New England's Premier Precaster
800-696-7432 (SHEA)
www.sheaconcrete.com
MAILING ADDRESS: 87 HAVERHILL RD AMESBURY, MA 01913

EVERSOURCE-MA 1PH XFMR VAULT 45" X 45" X 48"

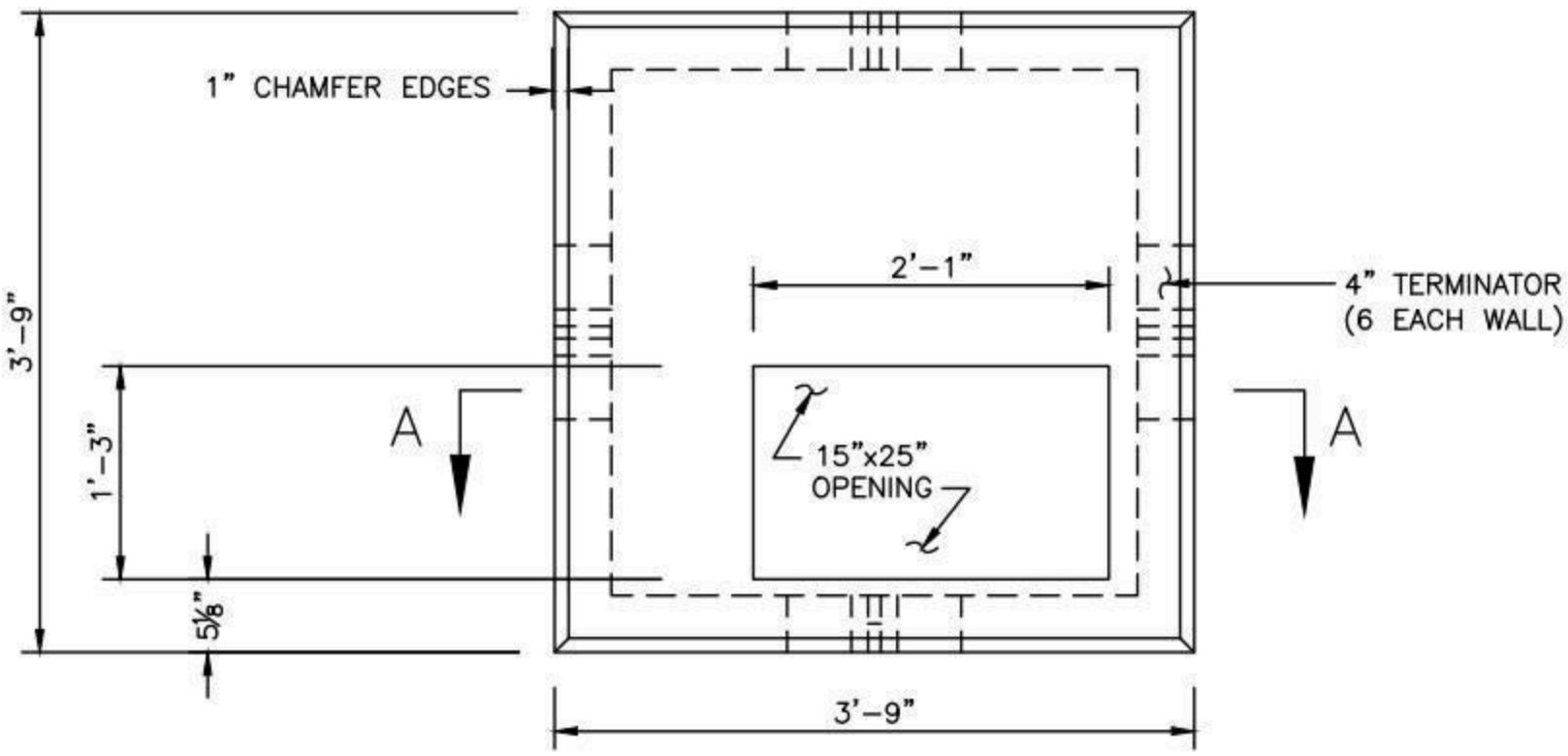

PLAN

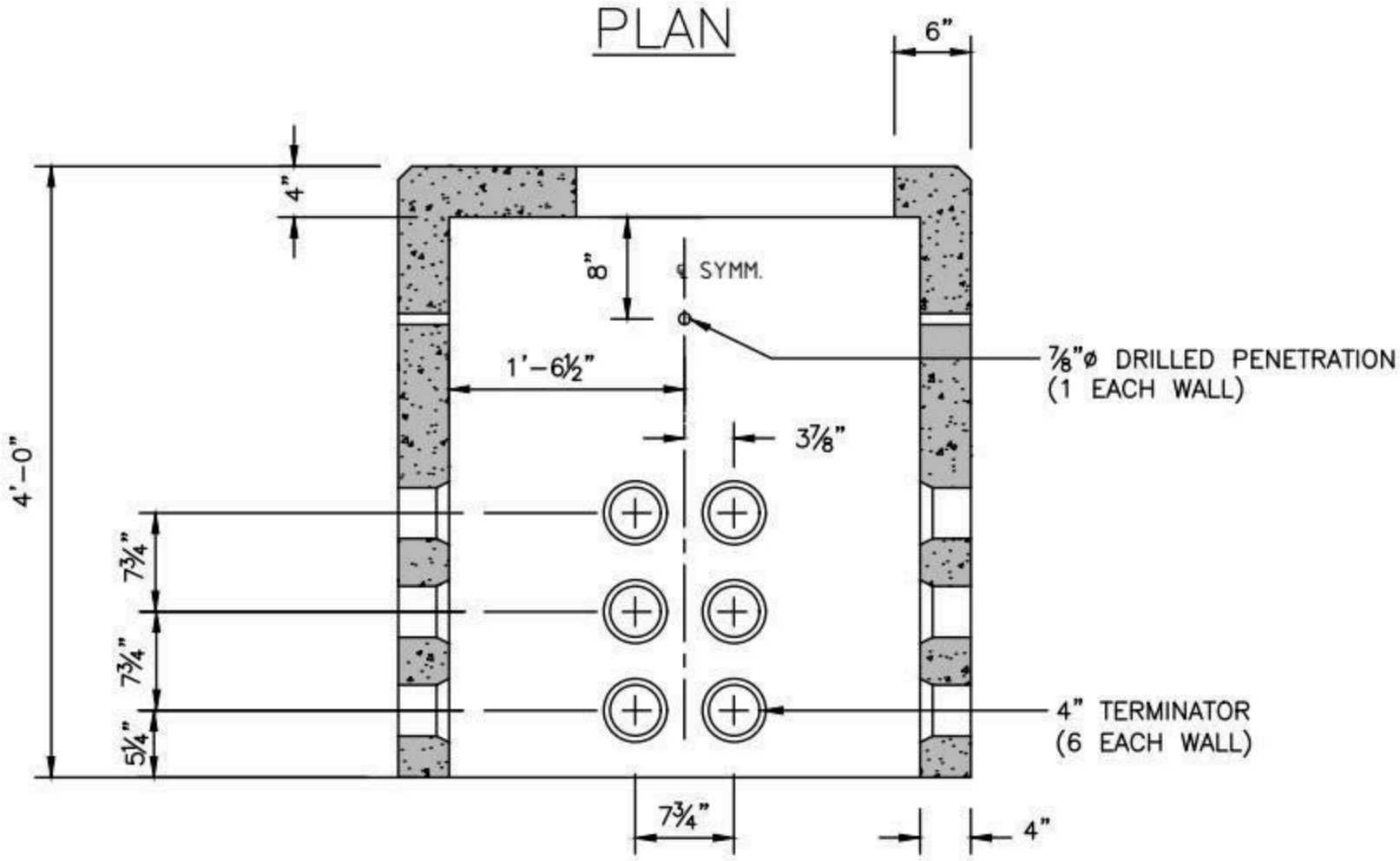

SECTION A-A

TYPICAL ALL WALLS

NOTES:

1. CONCRETE: 5,000 PSI MINIMUM AFTER 28 DAYS.
2. STEEL REINFORCEMENT CONFORMS TO ASTM A615, GRADE 60. MINIMUM STEEL COVER 1 ½".
3. ALL TERMINATORS SHALL HAVE BELL ENDS FLUSH WITH THE INSIDE WALL.
4. RATING: 25-167KVA
5. FORMERLY KNOWN AS: NE-12

SHEA PRODUCT ID:	NSV-1-48	FILE NAME:	ES-MA 1PH XFMR VAULT		
WEIGHT (LBS):	3565	DRAWN BY: L.P.	DATE: 12/03/2018	PAGE: II.D.1	

NPCA CERTIFIED PLANT

Specifications subject to change without notice

SHEA CONCRETE PRODUCTS
New England's Premier Precaster
800-696-7432 (SHEA)
www.sheaconcrete.com
MAILING ADDRESS: 87 HAVERHILL RD AMESBURY, MA 01913

EVERSOURCE 3PH XFMR VAULT
72" X 72" X 48"

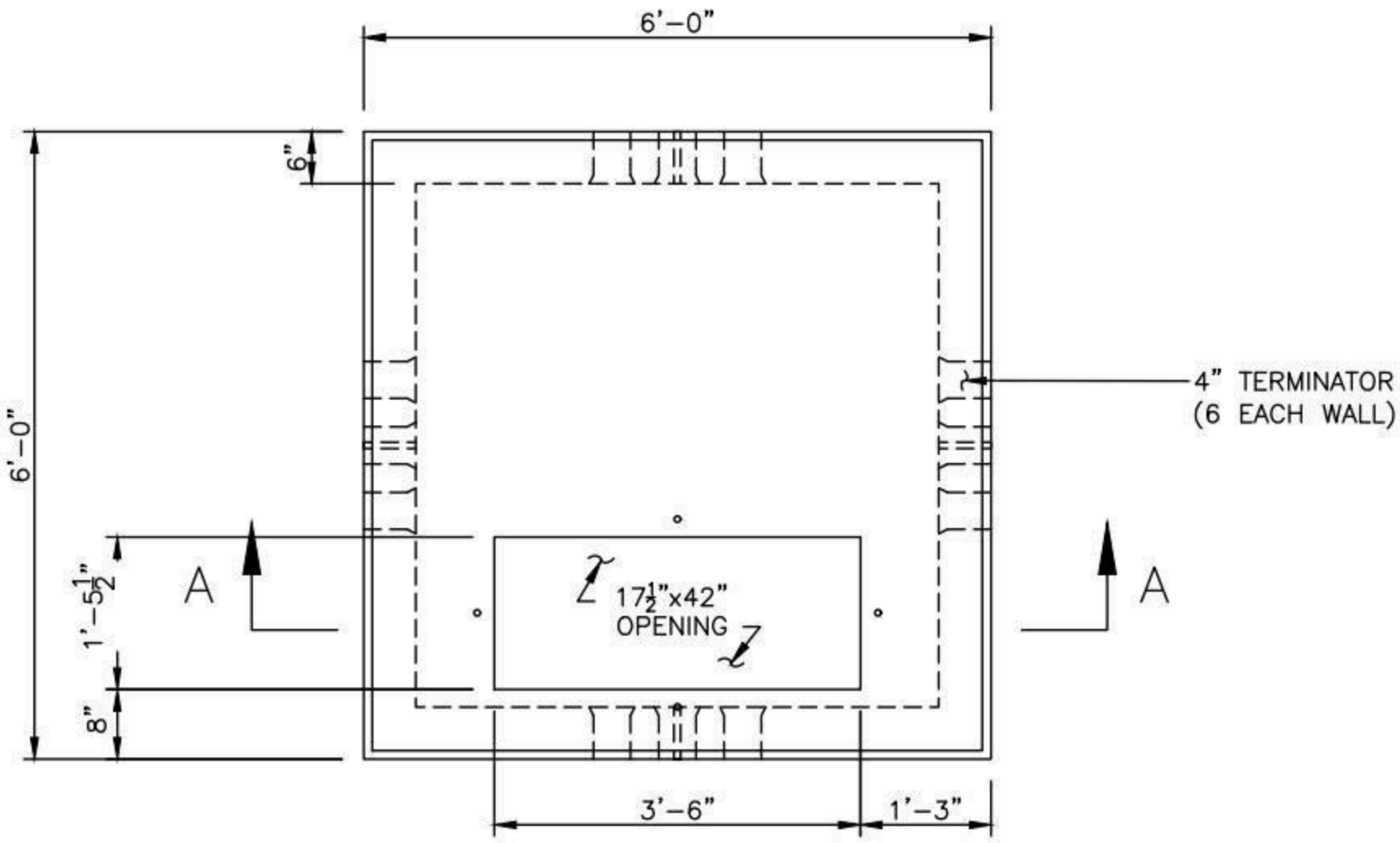

PLAN

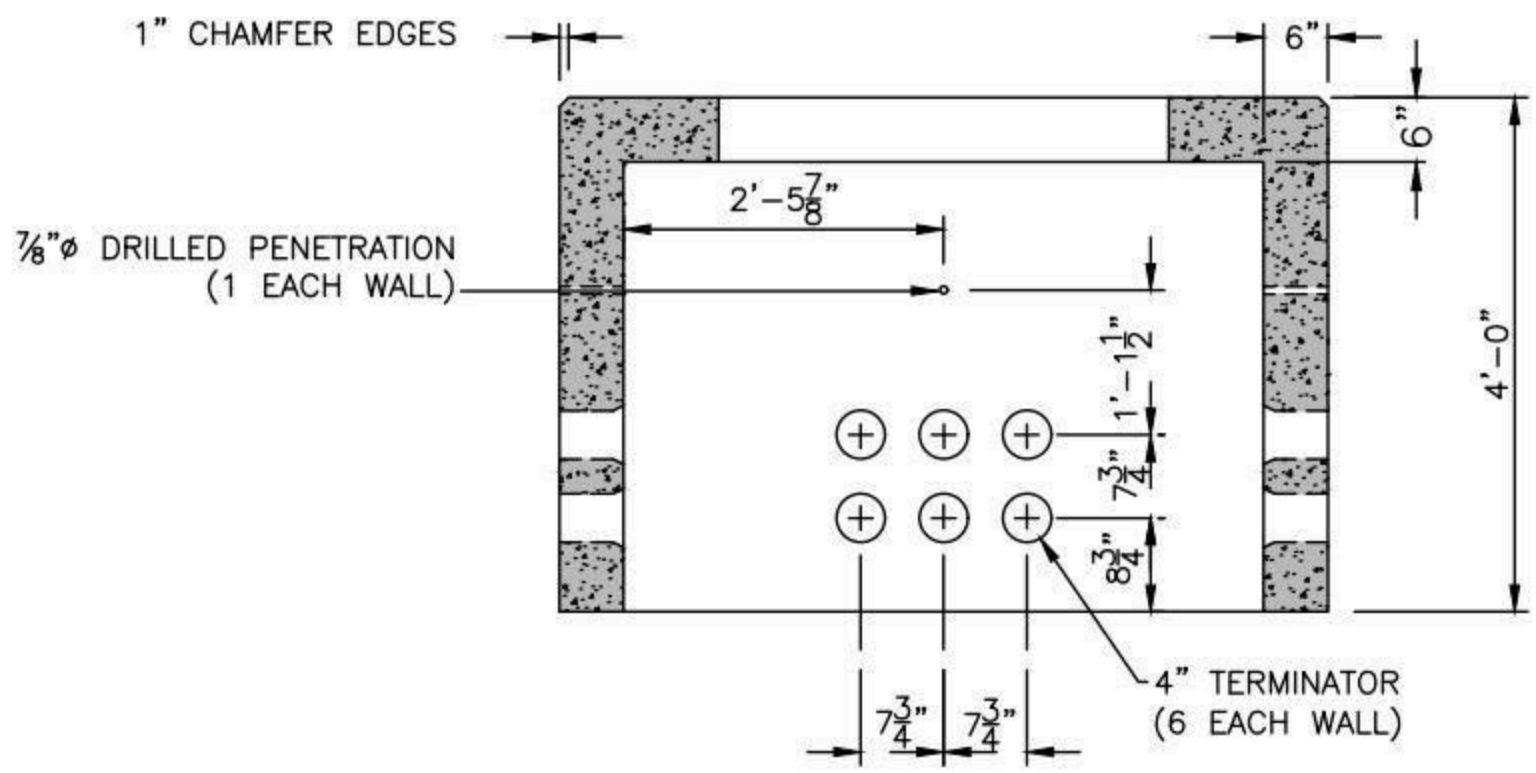

SECTION A-A

(TYPICAL ELEVATION ALL 4 WALLS)

NOTES:

1. CONCRETE: 5,000 PSI MINIMUM AFTER 28 DAYS.
2. DESIGN LOADING: AASHTO HS20-44, 0 TO 5 FEET COVER.
3. DESIGN SPECIFICATIONS - ACI 318 & AASHTO LOAD FACTOR DESIGN METHOD.
4. STEEL REINFORCEMENT CONFORMS TO ASTM A615, GRADE 60. MINIMUM STEEL COVER 1 ½".
5. ALL TERMINATORS SHALL HAVE BELL ENDS FLUSH WITH THE INSIDE WALL.
6. RATING: 150-300KVA.
7. FORMERLY KNOWN AS: NE-13.

SHEA PRODUCT ID: NSV-3-48	FILE NAME: ES-MA 3PH XFMR VAULT		
WEIGHT (LBS): 8195	DRAWN BY: L.P.	DATE: 12/03/2018	PAGE: II.D.2

NPCA CERTIFIED PLANT

Specifications subject to change without notice

SHEA CONCRETE PRODUCTS
New England's Premier Precaster
800-696-7432 (SHEA)
www.sheaconcrete.com
MAILING ADDRESS: 87 HAVERHILL RD AMESBURY, MA 01913

EVERSOURCE 1000KVA XFMR VAULT
84" X 90" X 52"

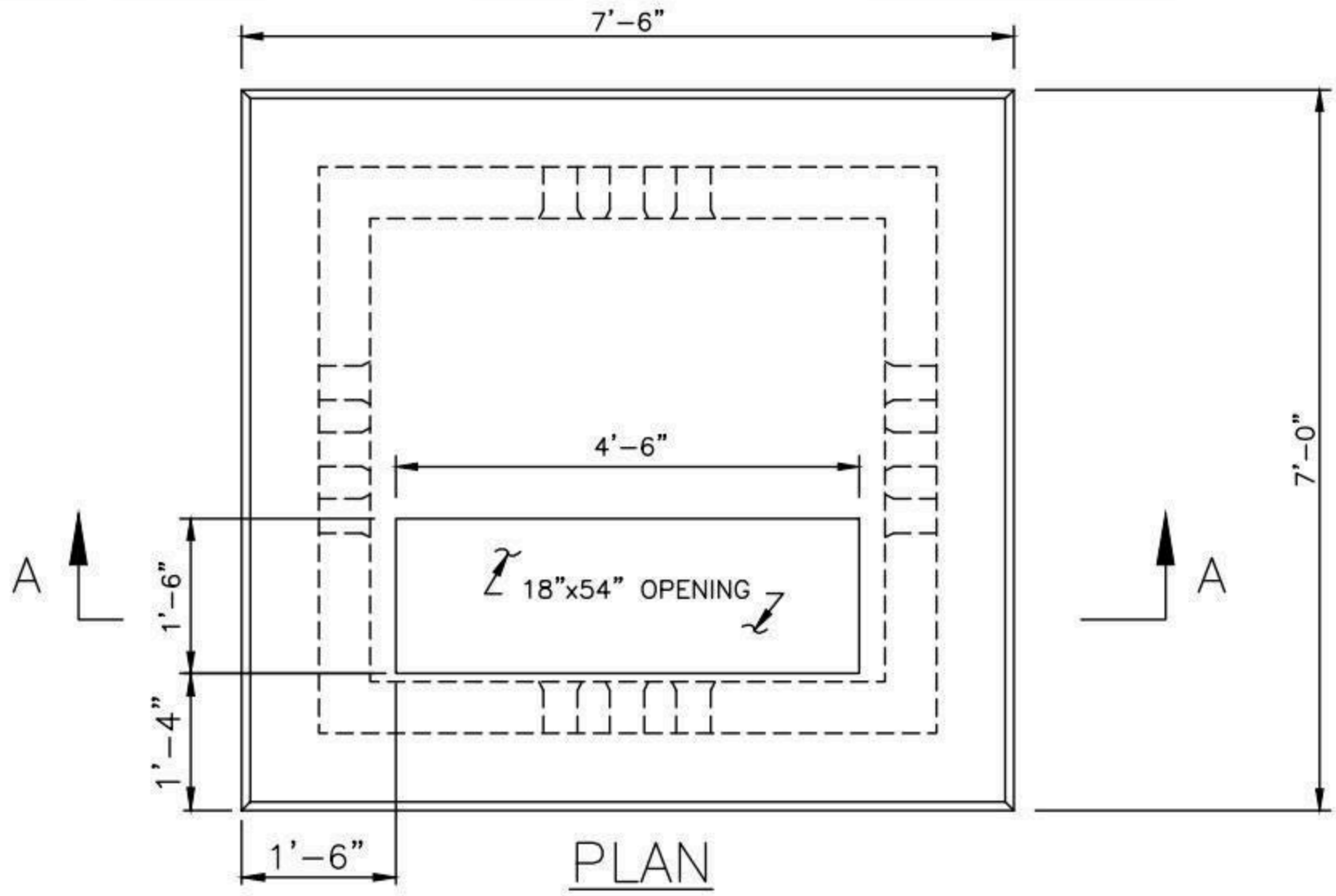

PLAN

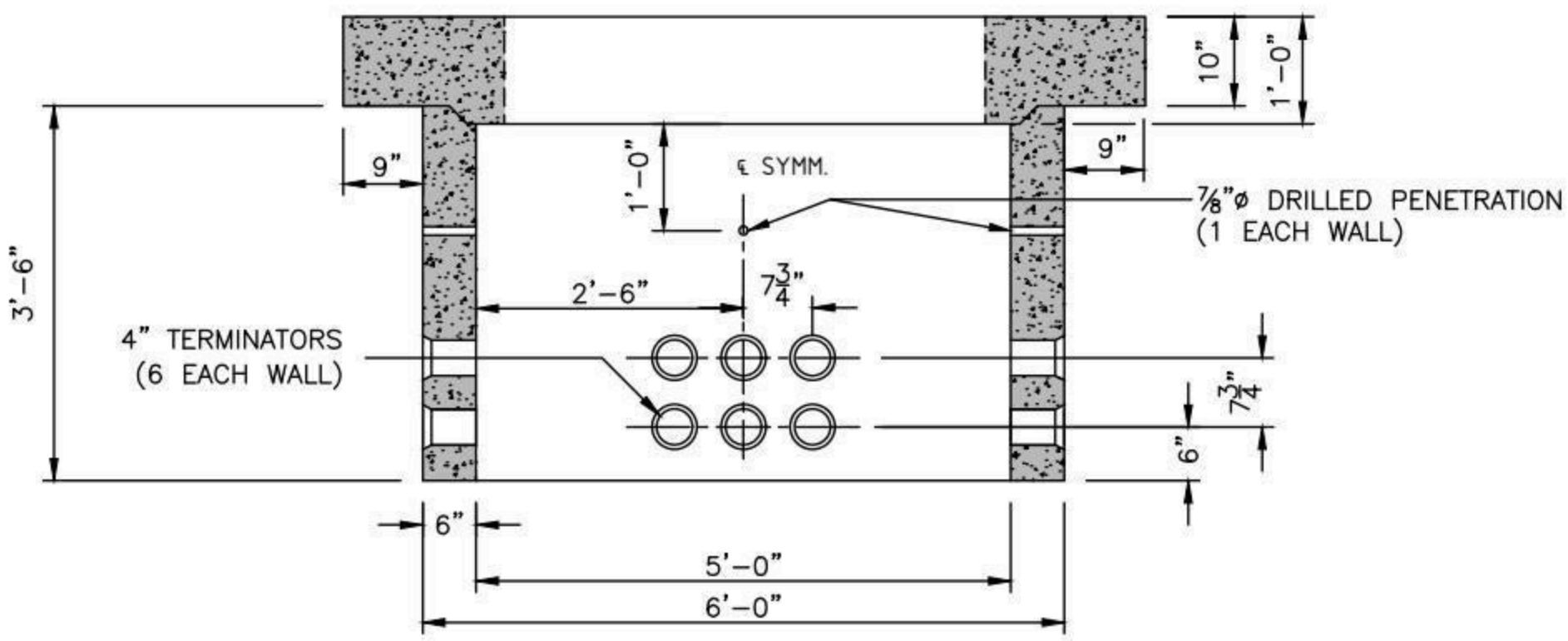

SECTION A-A

TYPICAL WALLS ELEVATION

NOTES:

1. CONCRETE: 5,000 PSI MINIMUM AFTER 28 DAYS.
2. DESIGN LOADING: AASHTO HS20-44, 0 TO 5 FEET COVER.
3. DESIGN SPECIFICATIONS – ACI 318 & AASHTO LOAD FACTOR DESIGN METHOD.
4. STEEL REINFORCEMENT CONFORMS TO ASTM A615, GRADE 60. MINIMUM STEEL COVER 1 ½".
5. ALL TERMINATORS SHALL HAVE BELL ENDS FLUSH WITH THE INSIDE WALL.
6. RATING: 225-1000KVA.
7. FORMERLY KNOWN AS: NE-13A.

SHEA PRODUCT ID: NSV-3-2P	FILE NAME: ES-MA 1000KVA XFMR VAULT			NPCA CERTIFIED PLANT
WEIGHT (LBS): 13195	DRAWN BY: L.P.	DATE: 12/03/2018	PAGE: II.D.3	

Specifications subject to change without notice

SHEA CONCRETE PRODUCTS
New England's Premier Precaster
800-696-7432 (SHEA)
www.sheaconcrete.com
MAILING ADDRESS: 87 HAVERHILL RD AMESBURY, MA 01913

EVERSOURCE-MA 3801-1
XFMR VAULT 6' X 6'-6" X 4'-4"

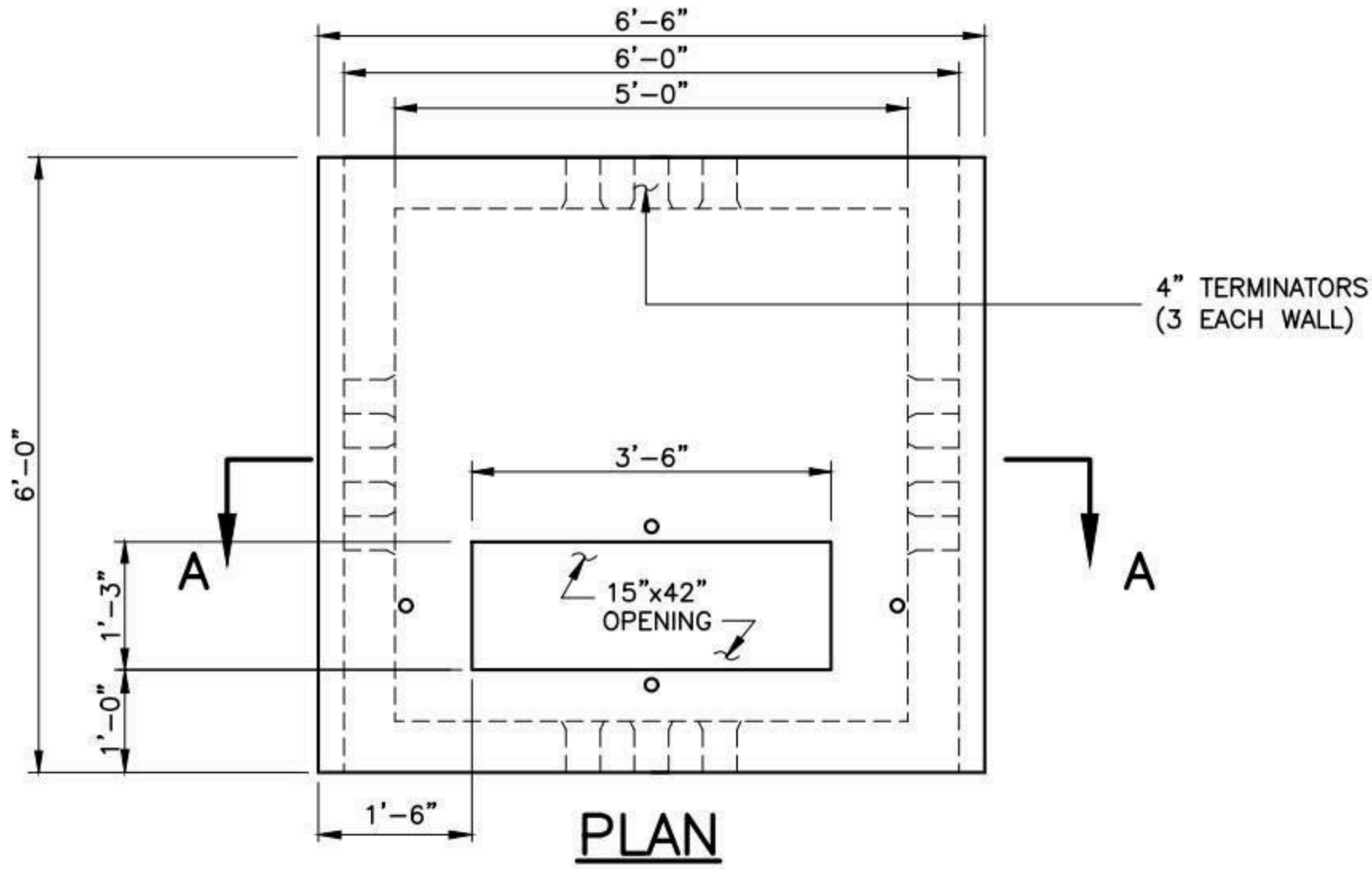

PLAN

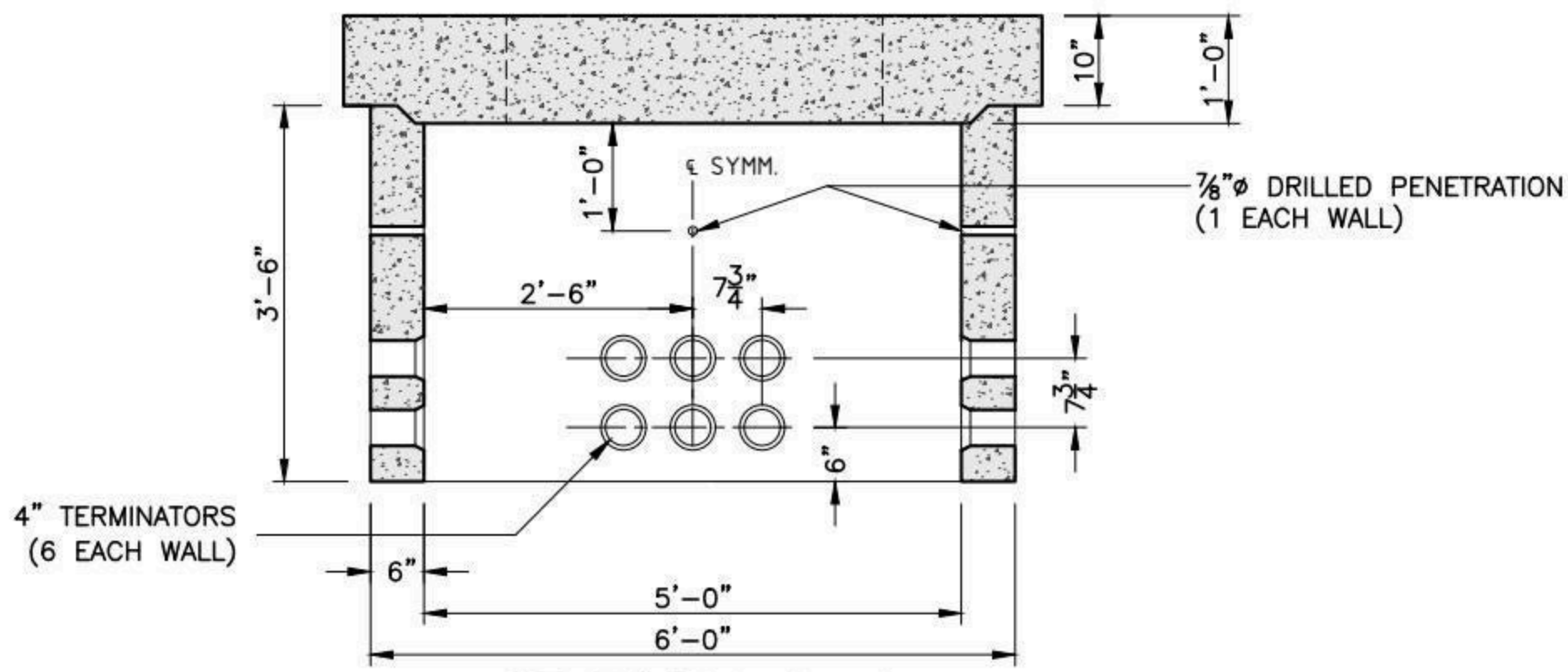

SECTION A-A

TYPICAL WALLS ELEVATION

NOTES:

1. CONCRETE: 5,000 PSI MINIMUM AFTER 28 DAYS.
2. DESIGN LOADING: AASHTO HS20-44, 0 TO 5 FEET COVER.
3. DESIGN SPECIFICATIONS – ACI 318 & AASHTO LOAD FACTOR DESIGN METHOD.
4. STEEL REINFORCEMENT CONFORMS TO ASTM A615, GRADE 60. MINIMUM STEEL COVER 1 ½".
5. ALL TERMINATORS SHALL HAVE BELL ENDS FLUSH WITH THE INSIDE WALL.

SHEA PRODUCT ID: NSM3801-1	FILE NAME: ES-MA 3801-1 XFMR VAULT			NPCA CERTIFIED PLANT
WEIGHT (LBS): 11240	DRAWN BY: L.P.	DATE: 12/19/2017	PAGE: II.D.4	

Specifications subject to change without notice

SHEA CONCRETE PRODUCTS
New England's Premier Precaster
800-696-7432 (SHEA)
www.sheaconcrete.com
MAILING ADDRESS: 87 HAVERHILL RD AMESBURY, MA 01913

EVERSOURCE-MA 3801-2
XFMR VAULT 8' X 8' X 4'-4"

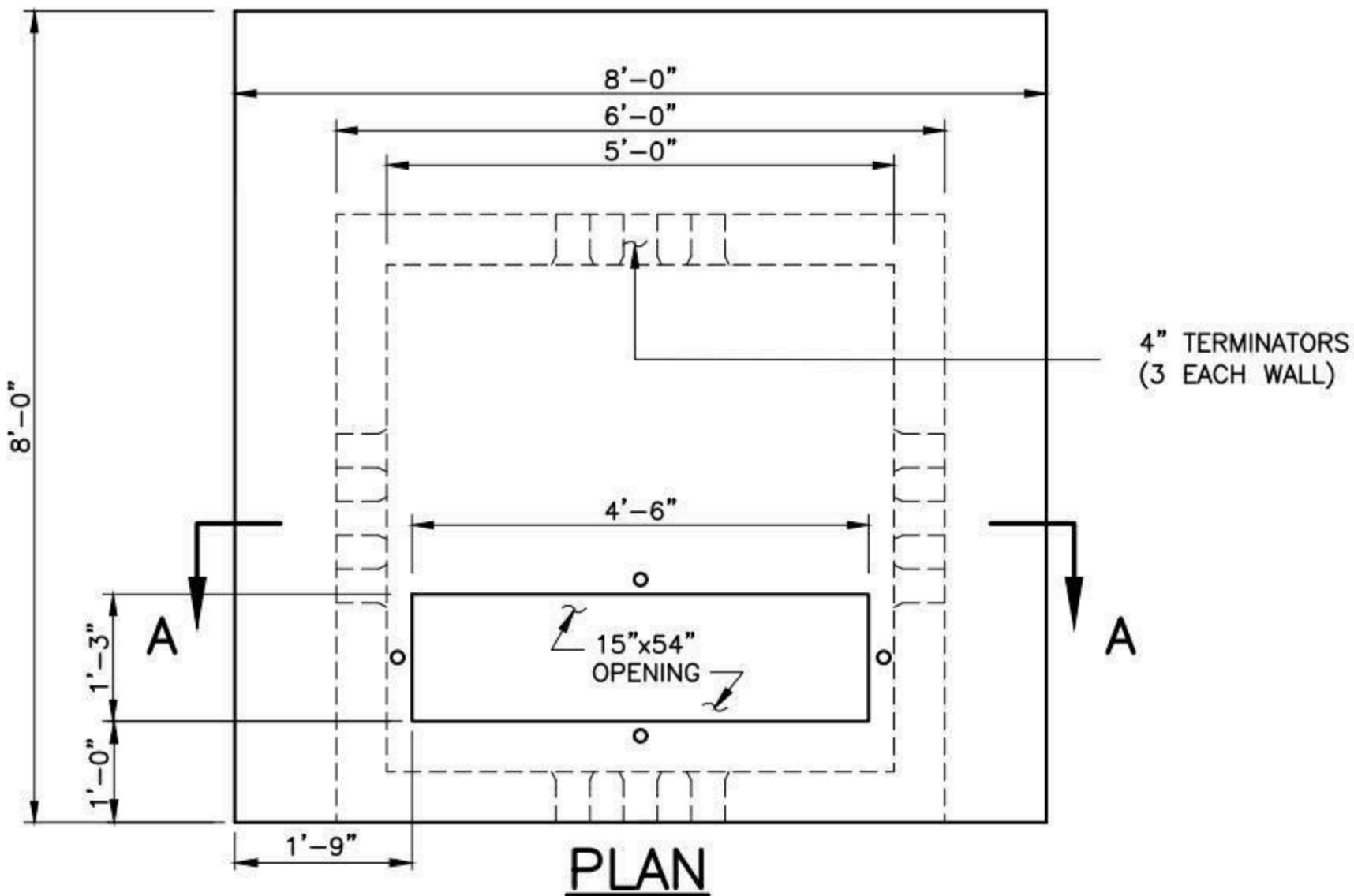

PLAN

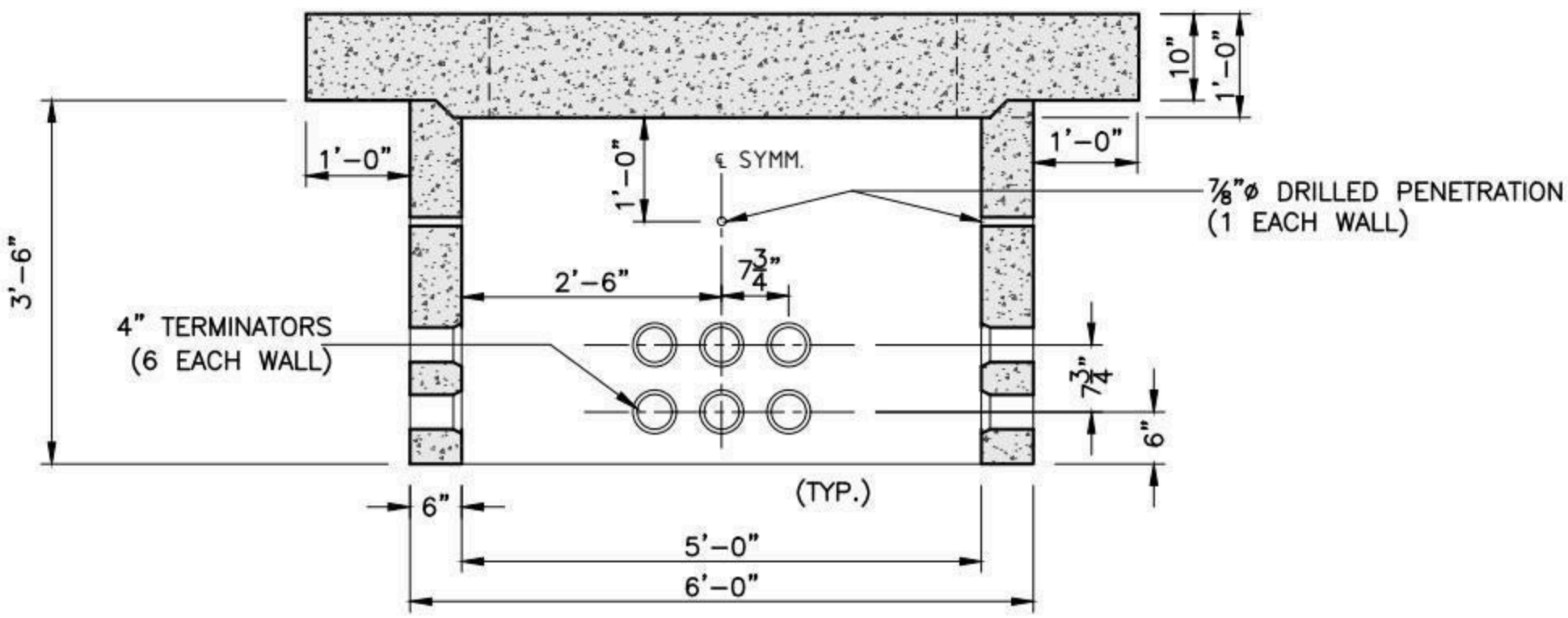

SECTION A-A

TYPICAL WALLS ELEVATION

NOTES:

1. CONCRETE: 5,000 PSI MINIMUM AFTER 28 DAYS.
2. DESIGN LOADING: AASHTO HS20-44, 0 TO 5 FEET COVER.
3. DESIGN SPECIFICATIONS – ACI 318 & AASHTO LOAD FACTOR DESIGN METHOD.
4. STEEL REINFORCEMENT CONFORMS TO ASTM A615, GRADE 60. MINIMUM STEEL COVER 1 ½".
5. ALL TERMINATORS SHALL HAVE BELL ENDS FLUSH WITH THE INSIDE WALL.

SHEA PRODUCT ID: NSM3801-2	FILE NAME: ES-MA 3801-2 XFMR VAULT			NPCA CERTIFIED PLANT
WEIGHT (LBS): 14865	DRAWN BY: L.P.	DATE: 12/19/2017	PAGE: II.D.5	

Specifications subject to change without notice

SHEA CONCRETE PRODUCTS
New England's Premier Precaster
800-696-7432 (SHEA)
www.sheaconcrete.com
MAILING ADDRESS: 87 HAVERHILL RD AMESBURY, MA 01913

EVERSOURCE-NH 53-125 SINGLE PHASE SECTOR CABINET

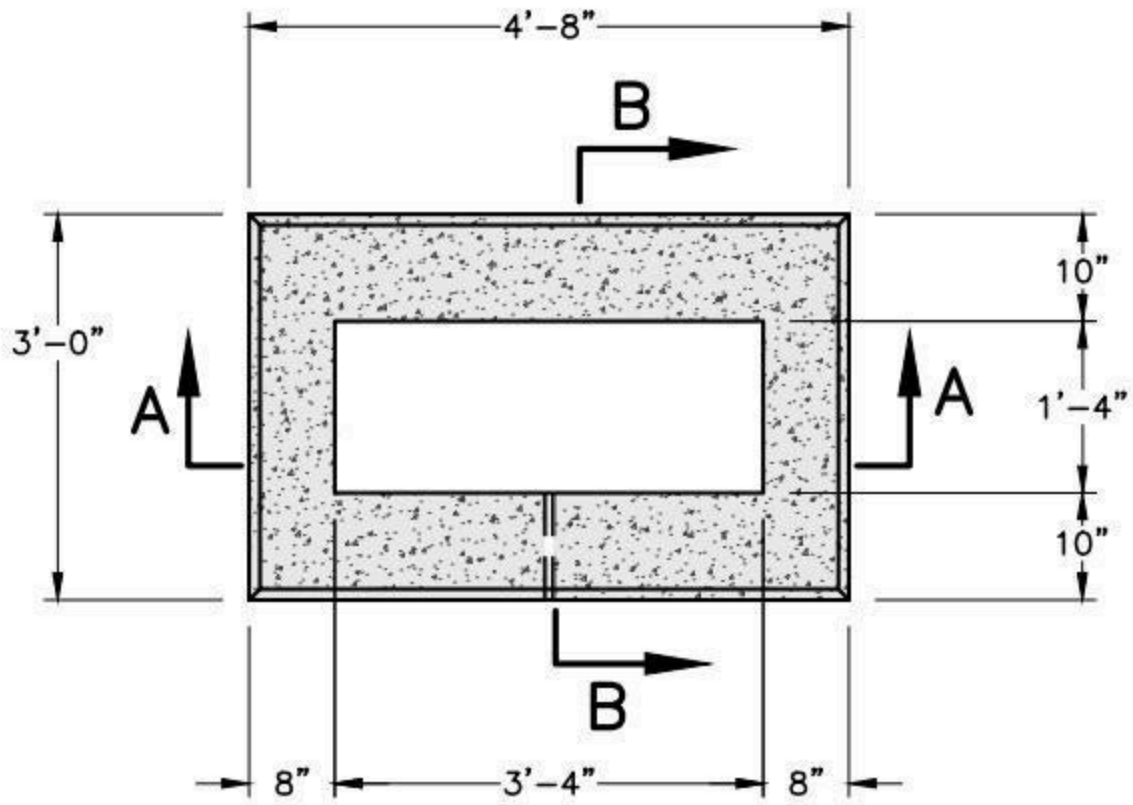

PLAN

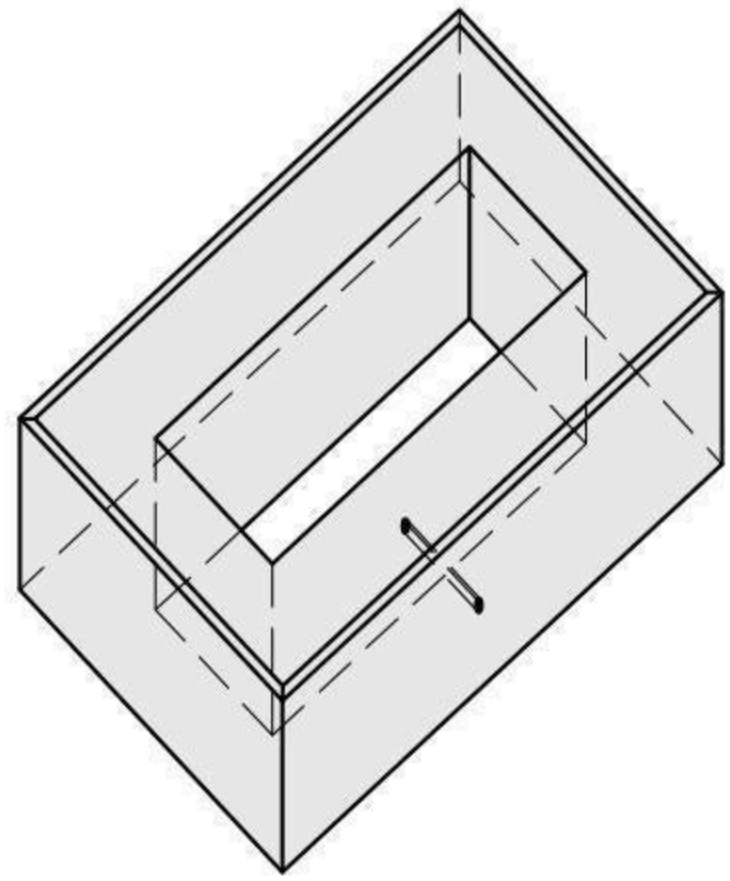

ISOMETRIC

N.T.S.

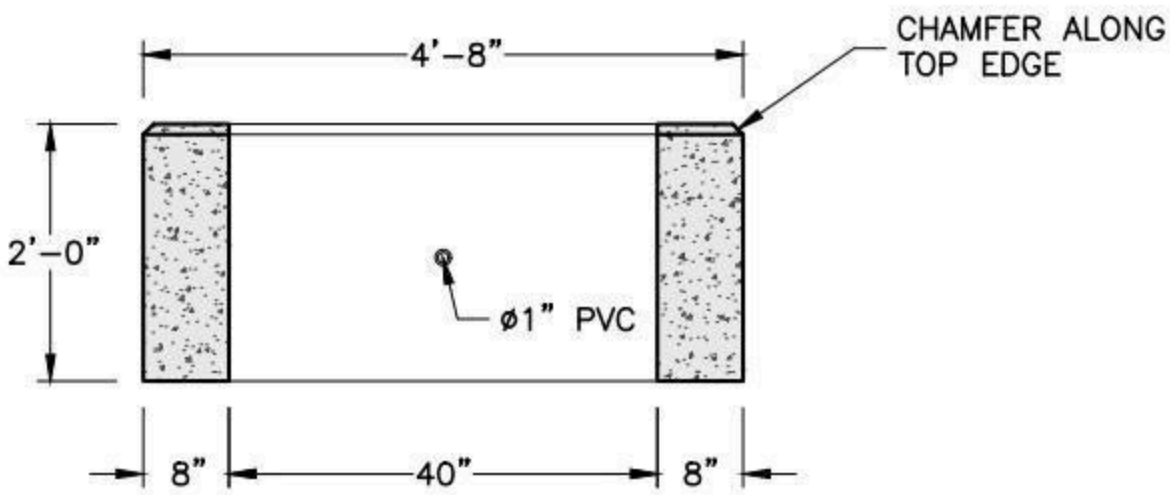

SECTION A-A

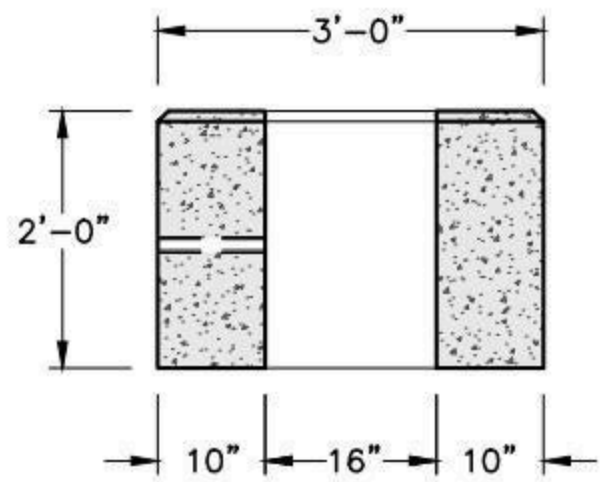

SECTION B-B

NOTES:

1. CONCRETE MINIMUM STRENGTH 4,000 PSI AFTER 28 DAYS.
2. REINFORCEMENT: #5 REBAR.
3. SECTOR CABINET CODE 391-004 / 391-005.
4. MEETS OR EXCEEDS EVERSOURCE SPECIFICATIONS.

SHEA PRODUCT ID: PSNH SECT1	FILE NAME: ES-NH 53-125 SECTOR CAB.dwg		
WEIGHT (LBS): 2,850#	DRAWN BY: MNN	DATE: 01/03/2018	PAGE: III.A.1

NPCA CERTIFIED PLANT

773 Salem Street-Wilmington, MA | 153 Cranberry Hwy-Rochester, MA | 87 Haverhill Road-Amesbury, MA | 160 Old Turnpike Rd-Nottingham, NH

Specifications subject to change without notice

SHEA CONCRETE PRODUCTS
New England's Premier Precaster
800-696-7432 (SHEA)
www.sheaconcrete.com
MAILING ADDRESS: 87 HAVERHILL RD AMESBURY, MA 01913

EVERSOURCE-NH 53-128 SINGLE PHASE SECTOR CABINET

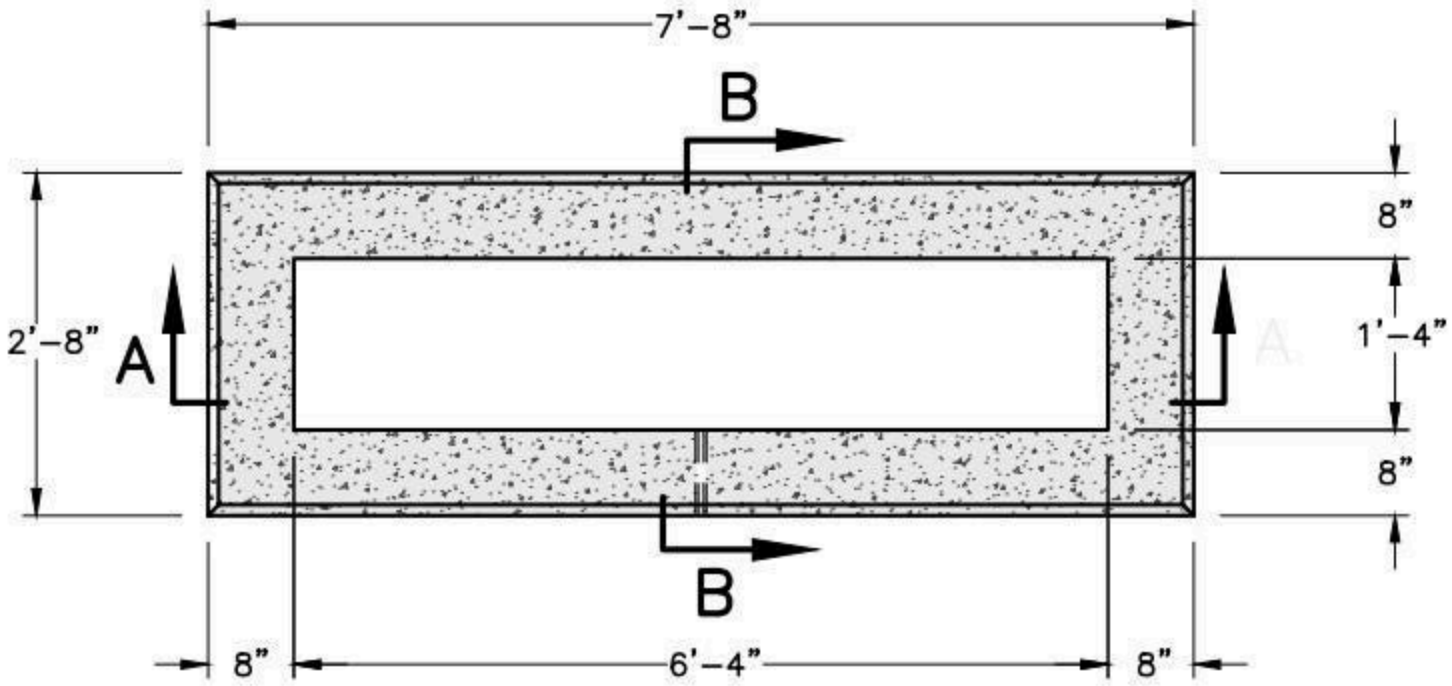

PLAN

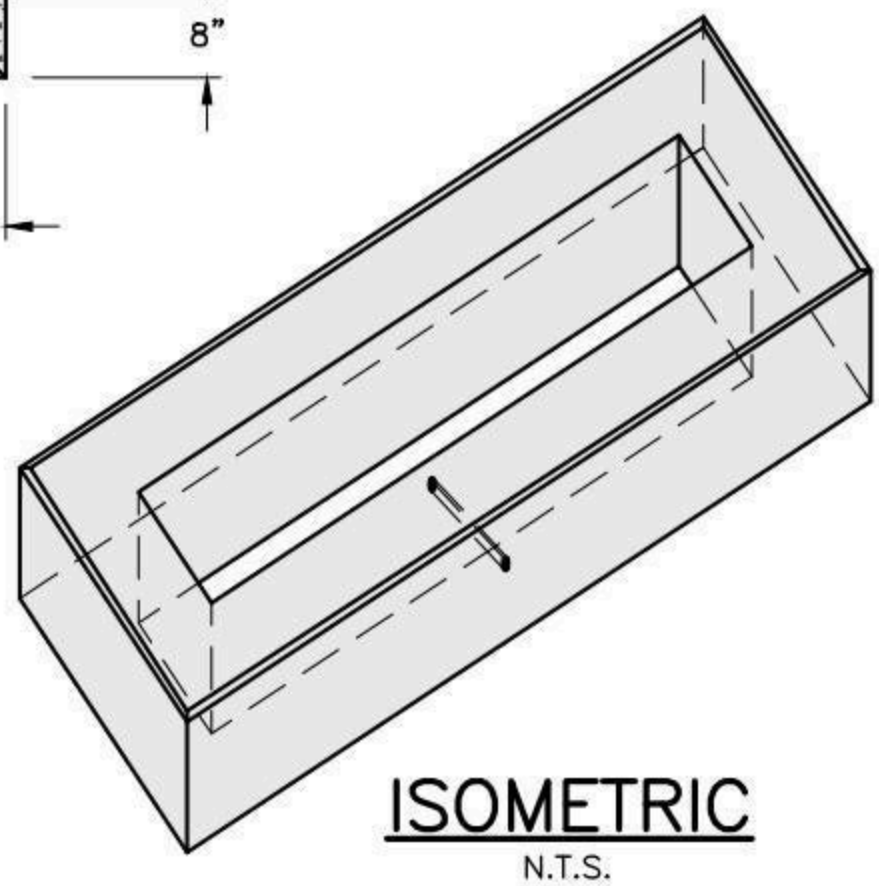

ISOMETRIC
N.T.S.

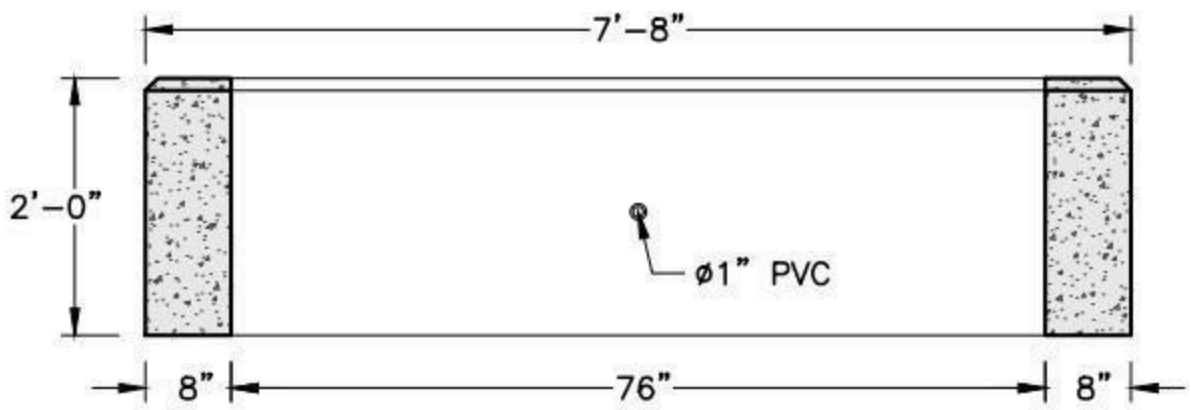

SECTION A-A

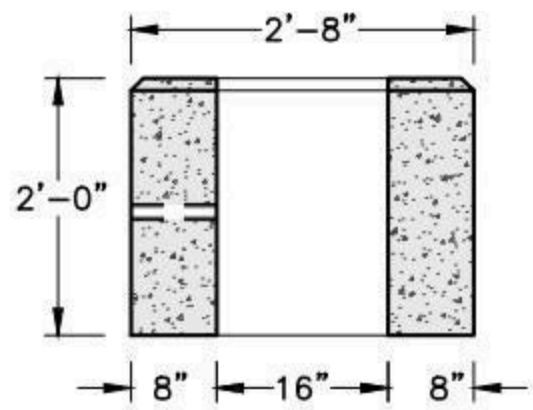

SECTION B-B

NOTES:

1. CONCRETE MINIMUM STRENGTH 4,000 PSI AFTER 28 DAYS.
2. REINFORCEMENT: #5 REBAR.
3. SECTOR CABINET CODE 391-004 / 391-005.
4. MEETS OR EXCEEDS EVERSOURCE SPECIFICATIONS.

SHEA PRODUCT ID: PSNH SECT3	FILE NAME: ES-NH 53-128 SECTOR CAB.dwg		
WEIGHT (LBS): 3,600#	DRAWN BY: MNN	DATE: 01/03/2018	PAGE: III.A.2

NPCA CERTIFIED PLANT

Specifications subject to change without notice

SHEA CONCRETE PRODUCTS
New England's Premier Precaster
800-696-7432 (SHEA)
www.sheaconcrete.com
MAILING ADDRESS: 87 HAVERHILL RD AMESBURY, MA 01913

EVERSOURCE-NH PULLBOX (GRASSY AREA)

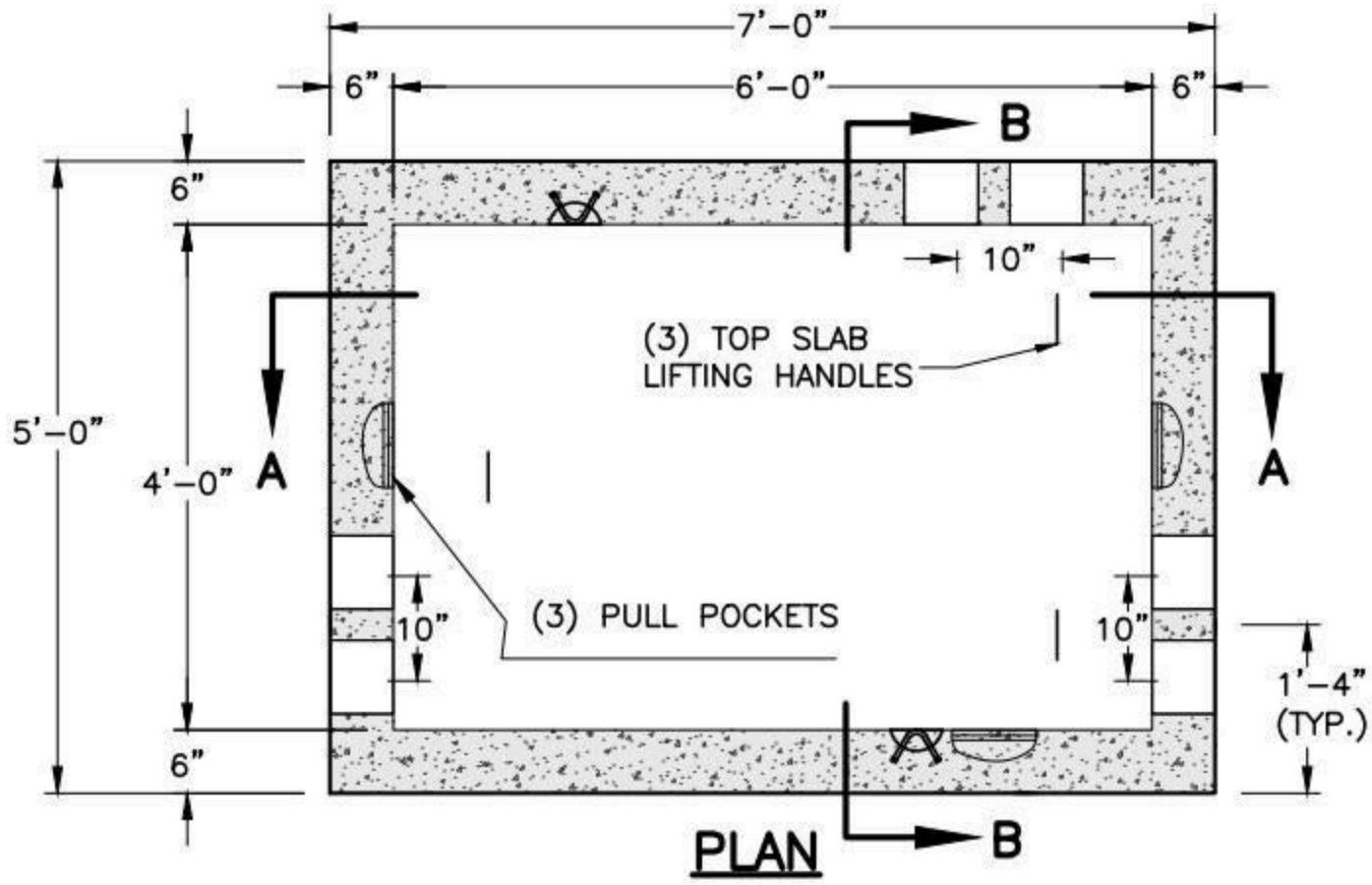

PLAN

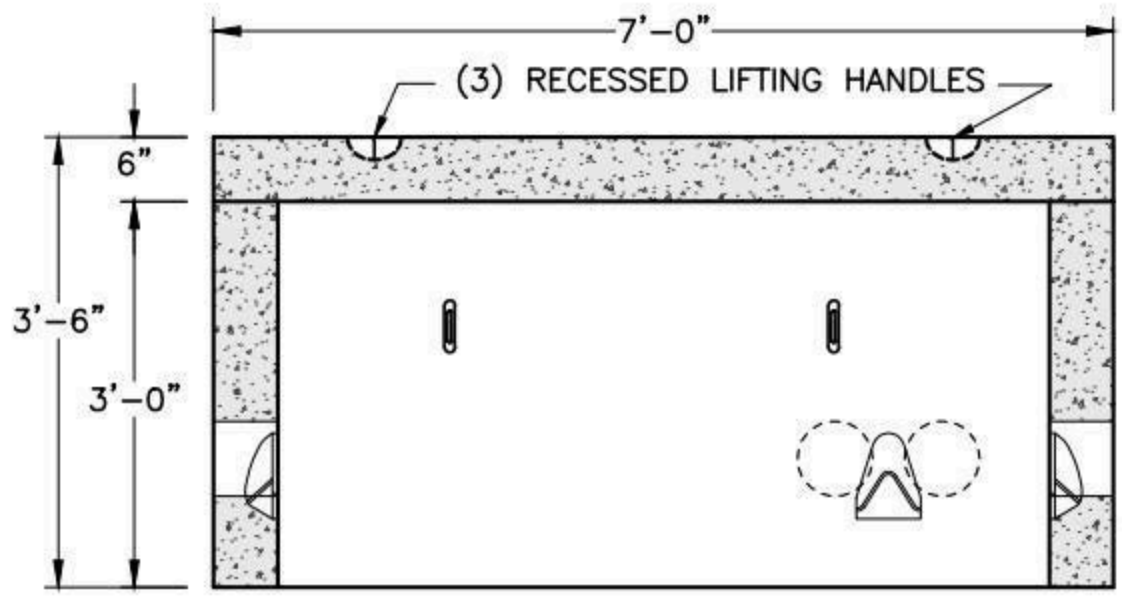

SECTION A-A

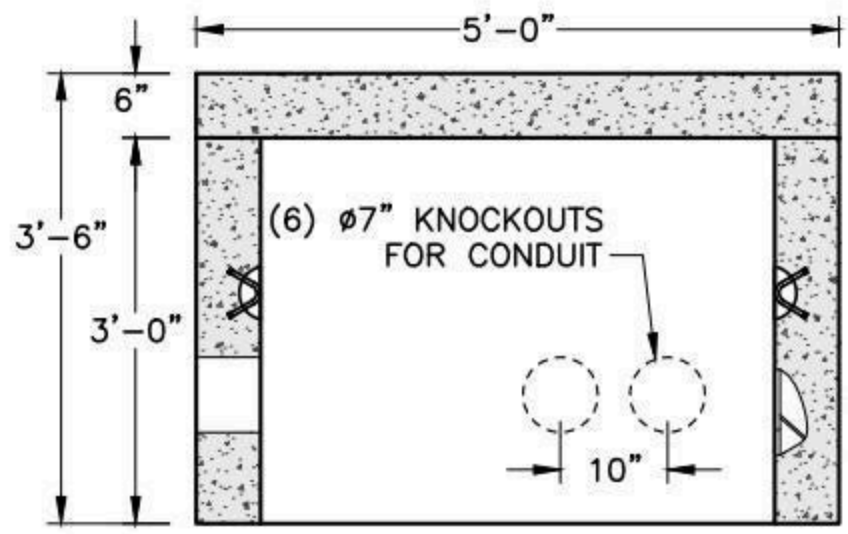

SECTION B-B

NOTES:
1. CONCRETE MINIMUM STRENGTH 4,000 PSI AFTER 28 DAYS.
2. STEEL REINFORCING: ASTM-A615 GRADE #60
3. DESIGNED FOR H-10 LOADING.

ITEM	WEIGHT
COVER	2,600#
BASE	4,800#
TOTAL	7,400#

SHEA PRODUCT ID: PSNHPB	FILE NAME: EVERSOURCE PULLBOX GRASSY AREA.dwg		
WEIGHT (LBS): 7,400#	DRAWN BY: MNN	DATE: 01/05/2018	PAGE: III.A.3

NPCA CERTIFIED PLANT

Specifications subject to change without notice

SHEA CONCRETE PRODUCTS
New England's Premier Precaster
800-696-7432 (SHEA)
www.sheaconcrete.com
MAILING ADDRESS: 87 HAVERHILL RD AMESBURY, MA 01913

EVERSOURCE-NH SPLICE PIT

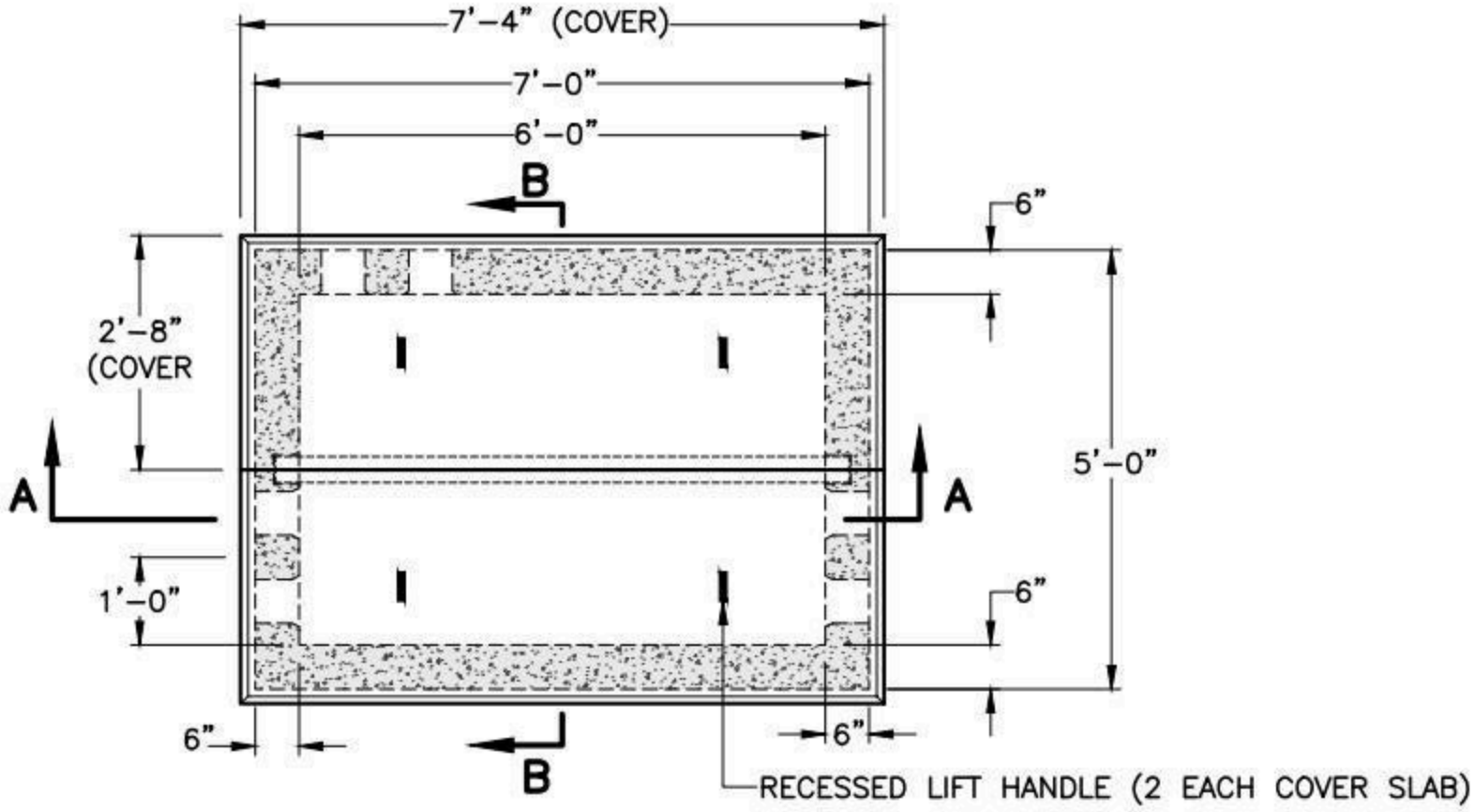

PLAN

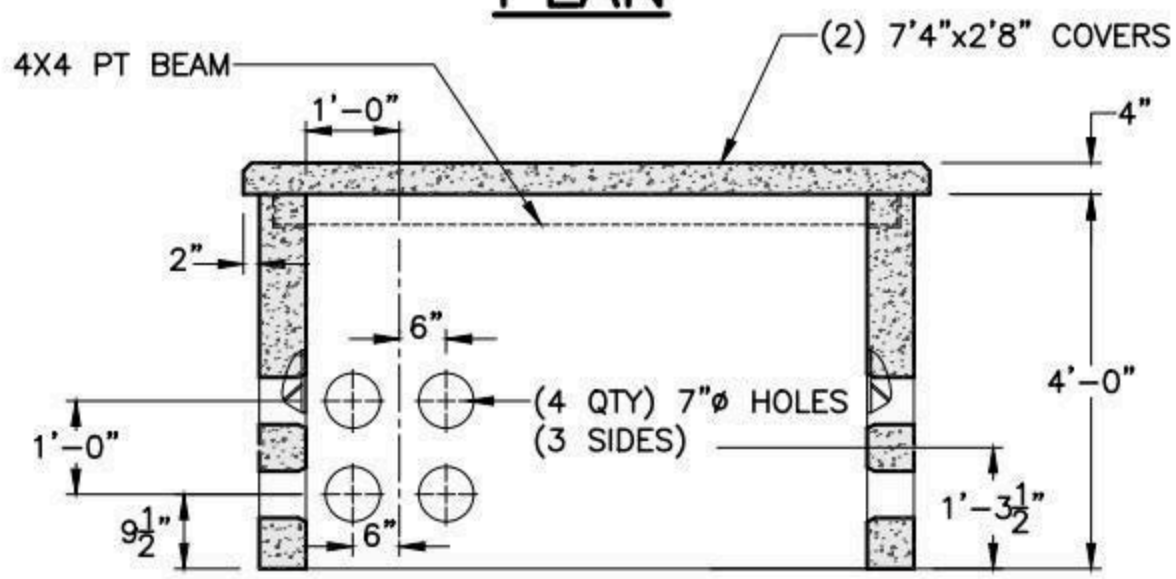

SECTION A-A

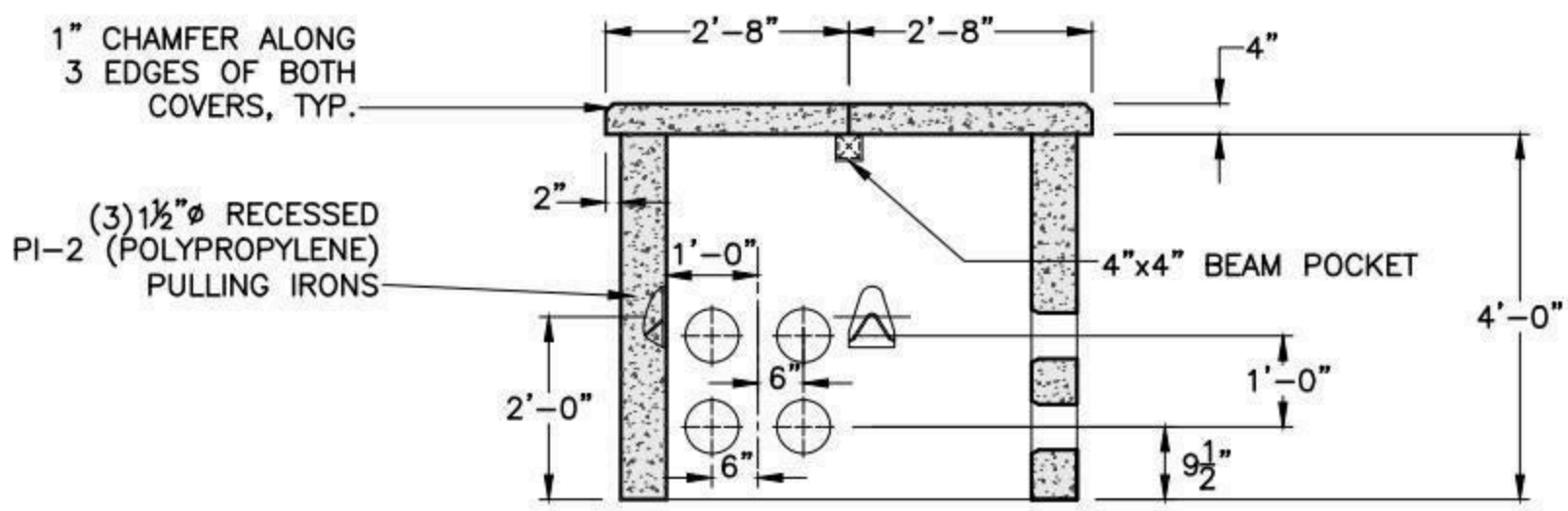

SECTION B-B

NOTES:

1. CONCRETE MINIMUM STRENGTH 4,000 PSI AFTER 28 DAYS.
2. DESIGNED FOR H-10 LOADING.
3. STEEL REINFORCEMENT PER ASTM-A615 GRADE 60

	WEIGHT
COVER (EACH)	675 LBS
PULL BOX	6,500 LBS

SHEA PRODUCT ID: PSNHMH4X6	FILE NAME: EVERSOURCE_SPLICE PIT.dwg		
WEIGHT (LBS): SEE TABLE	DRAWN BY: MNN	DATE: 11/28/2017	PAGE: III.A.4

NPCA CERTIFIED PLANT

Specifications subject to change without notice

SHEA CONCRETE PRODUCTS
New England's Premier Precaster
800-696-7432 (SHEA)
www.sheaconcrete.com
MAILING ADDRESS: 87 HAVERHILL RD AMESBURY, MA 01913

EVERSOURCE-NH MANHOLE
R10001-1 6'W X 12'L X 7'H

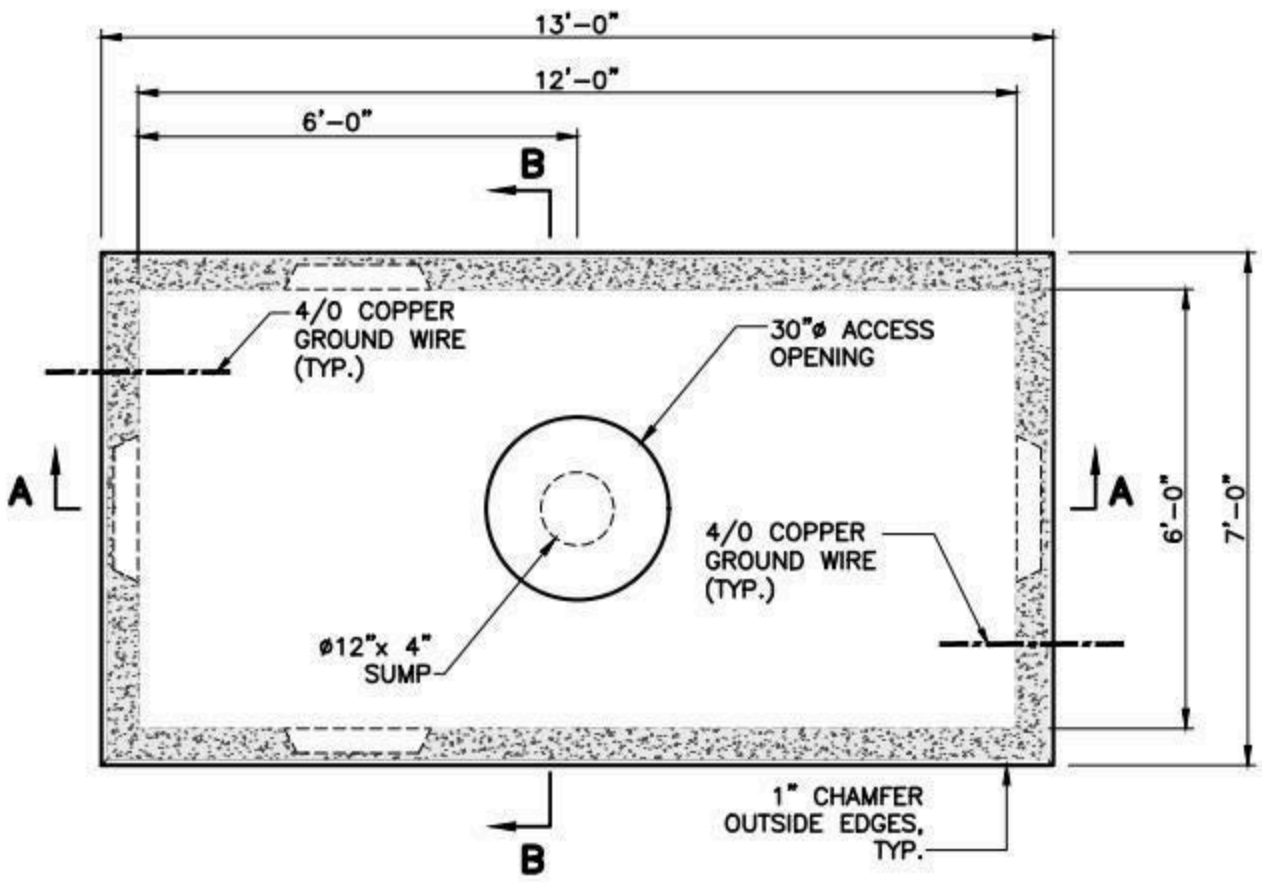

PLAN

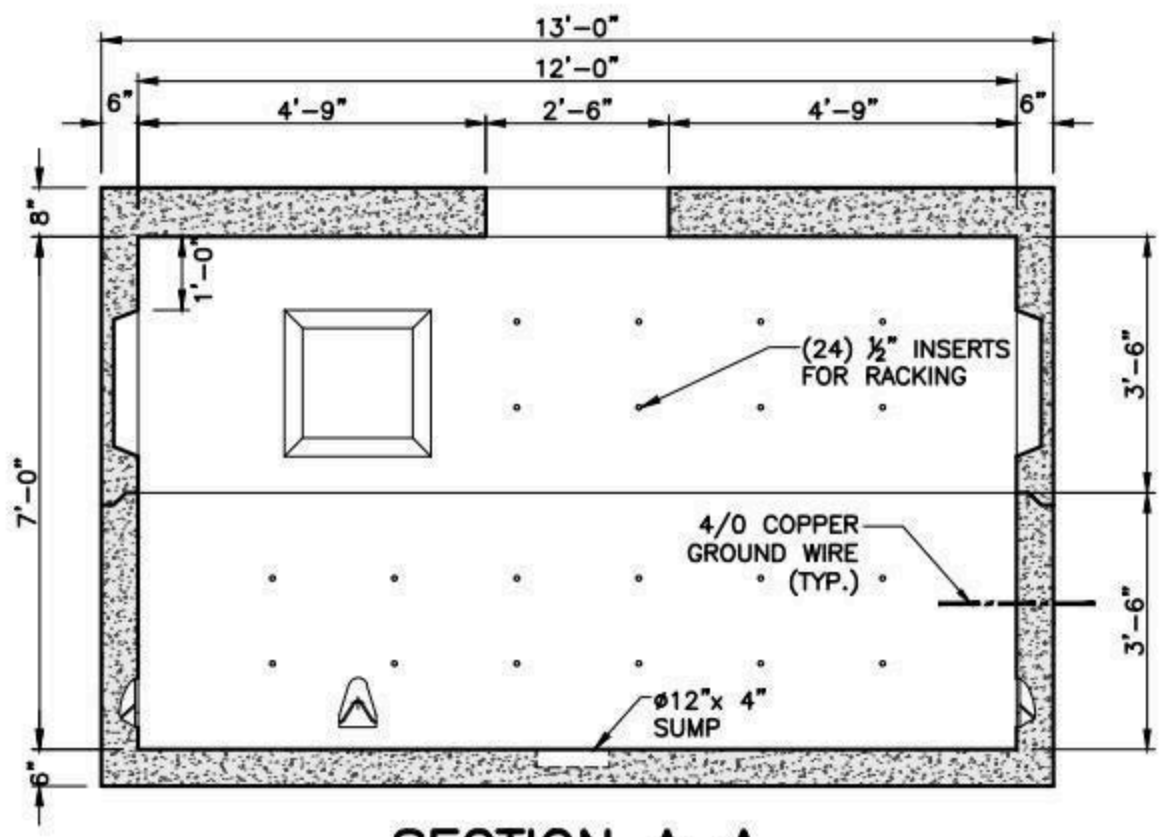

SECTION A-A

OPPOSITE WALL SIMILAR

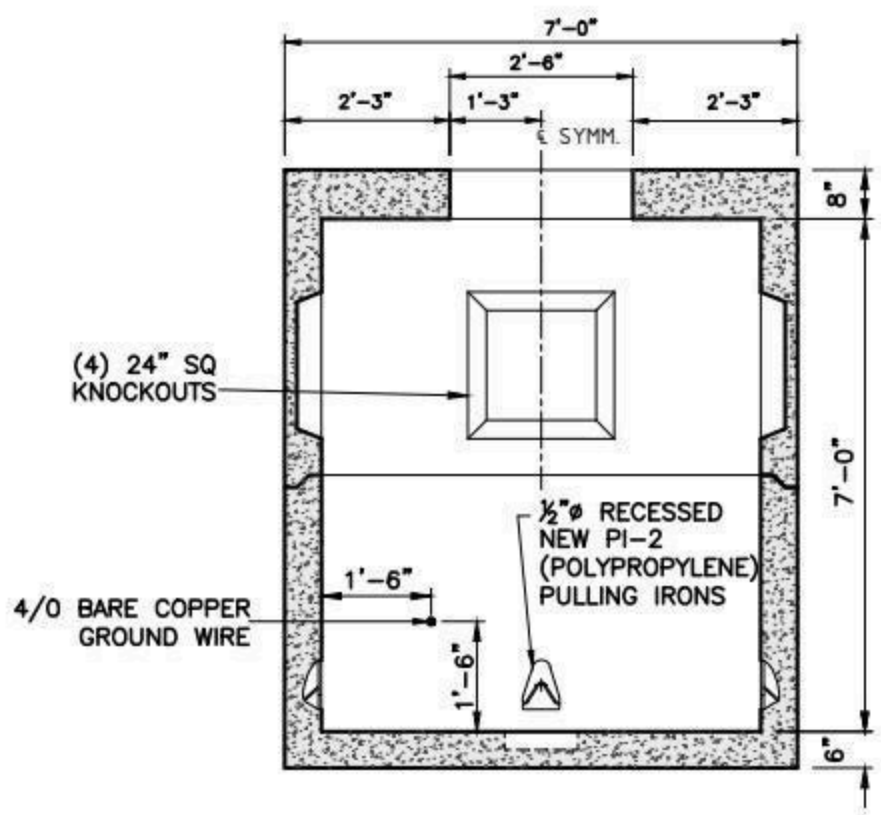

SECTION B-B

OPPOSITE WALL SIMILAR

NOTES:

1. CONCRETE: 5,000 PSI MINIMUM AFTER 28 DAYS.
2. ALL REINFORCEMENT PER ASTM A615, GRADE 60, 1" MIN COVER.
3. DESIGNED FOR HS20-44 LOADING.
4. EXTERIOR COATING PROVIDED.

	WEIGHT
TOP	17,750 LBS
BOTTOM	17,750 LBS
TOTAL	35,500 LBS

SHEA PRODUCT ID: EV-VAULT-R10001-1	FILE NAME: ES-NH MH R10001-1.dwg		
WEIGHT (LBS): 35,500#	DRAWN BY: NMB	DATE: 05/29/2018	PAGE: III.B.1

NPCA CERTIFIED PLANT

Specifications subject to change without notice

SHEA CONCRETE PRODUCTS
New England's Premier Precaster
800-696-7432 (SHEA)
www.sheaconcrete.com
MAILING ADDRESS: 87 HAVERHILL RD AMESBURY, MA 01913

EVERSOURCE-NH MANHOLE
R10001-2 6'W X 12'L X 7'H

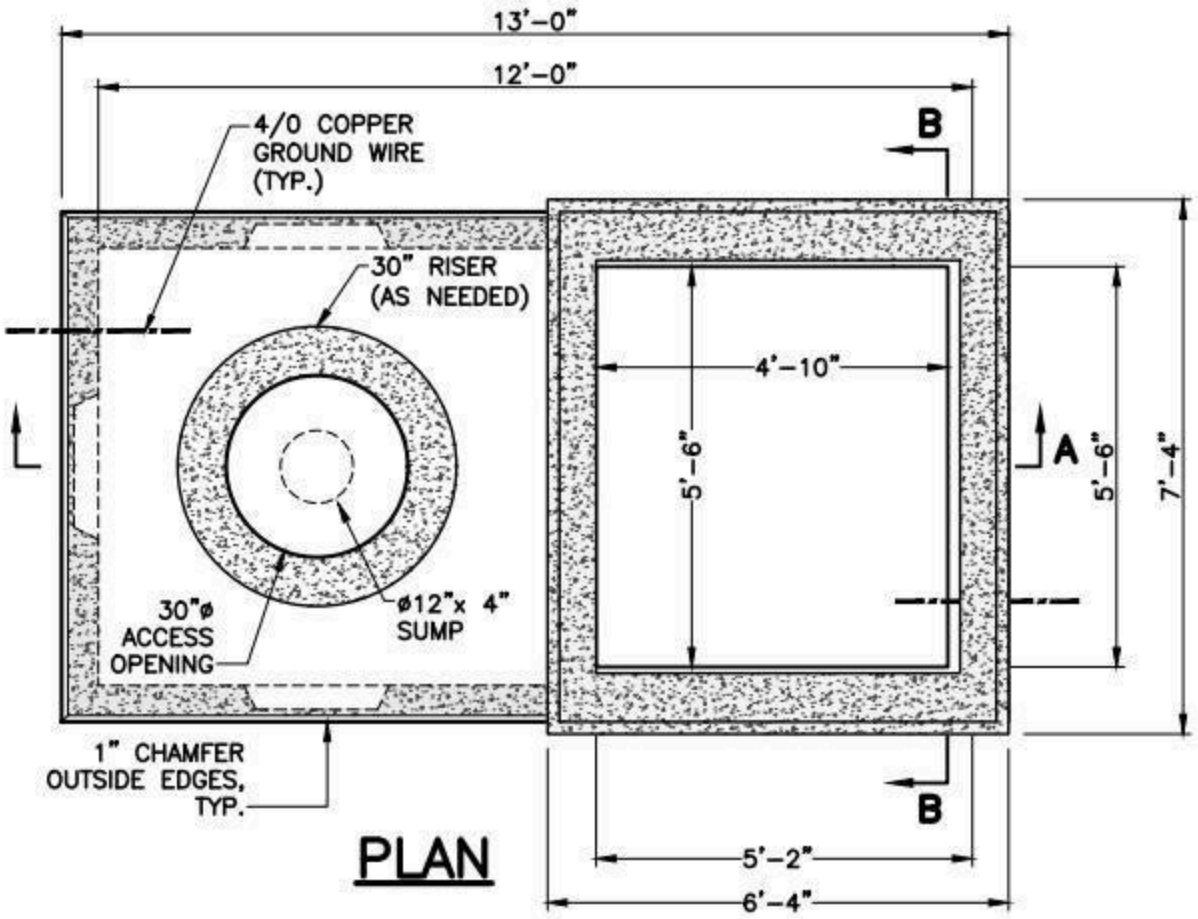

PLAN

	WEIGHT
TOP	17,750 LBS
BOTTOM	17,750 LBS
SECTOR CABINET	6,750 LBS
TOTAL	42,250 LBS

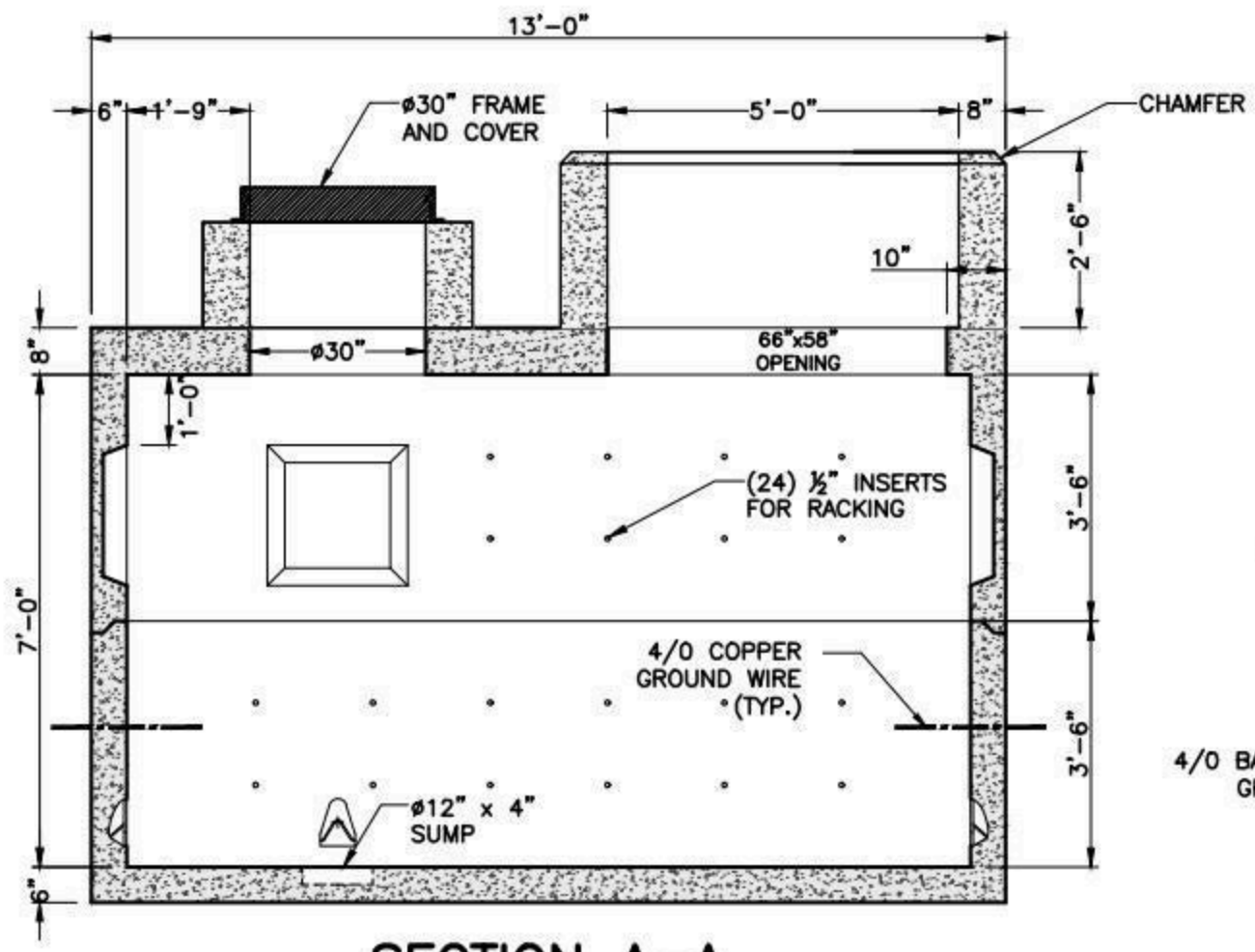

SECTION A-A

OPPOSITE WALL SIMILAR

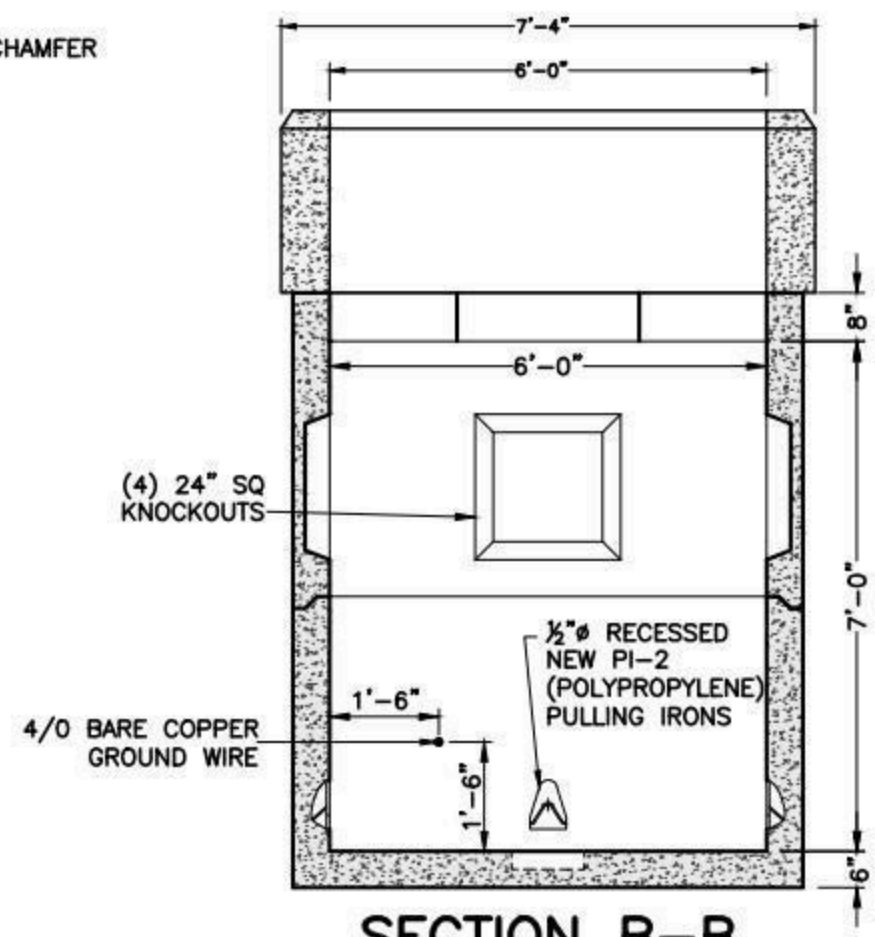

SECTION B-B

OPPOSITE WALL SIMILAR

NOTES:

1. CONCRETE: 5,000 PSI MINIMUM AFTER 28 DAYS.
2. ALL REINFORCEMENT PER ASTM A615, GRADE 60, 1" MIN COVER.
3. DESIGNED FOR HS20-44 LOADING.
4. EXTERIOR COATING PROVIDED.

SHEA PRODUCT ID: EV-VAULT-R10001-2	FILE NAME: ES-NH MH R10001-2.dwg		
WEIGHT (LBS): 42,250#	DRAWN BY: NMB	DATE: 07/25/2017	PAGE: III.B.2

NPCA CERTIFIED PLANT

Specifications subject to change without notice

SHEA CONCRETE PRODUCTS
New England's Premier Precaster
800-696-7432 (SHEA)
www.sheaconcrete.com
MAILING ADDRESS: 87 HAVERHILL RD AMESBURY, MA 01913

EVERSOURCE-NH MANHOLE
R10001-3 6'W X 12'L X 7'H

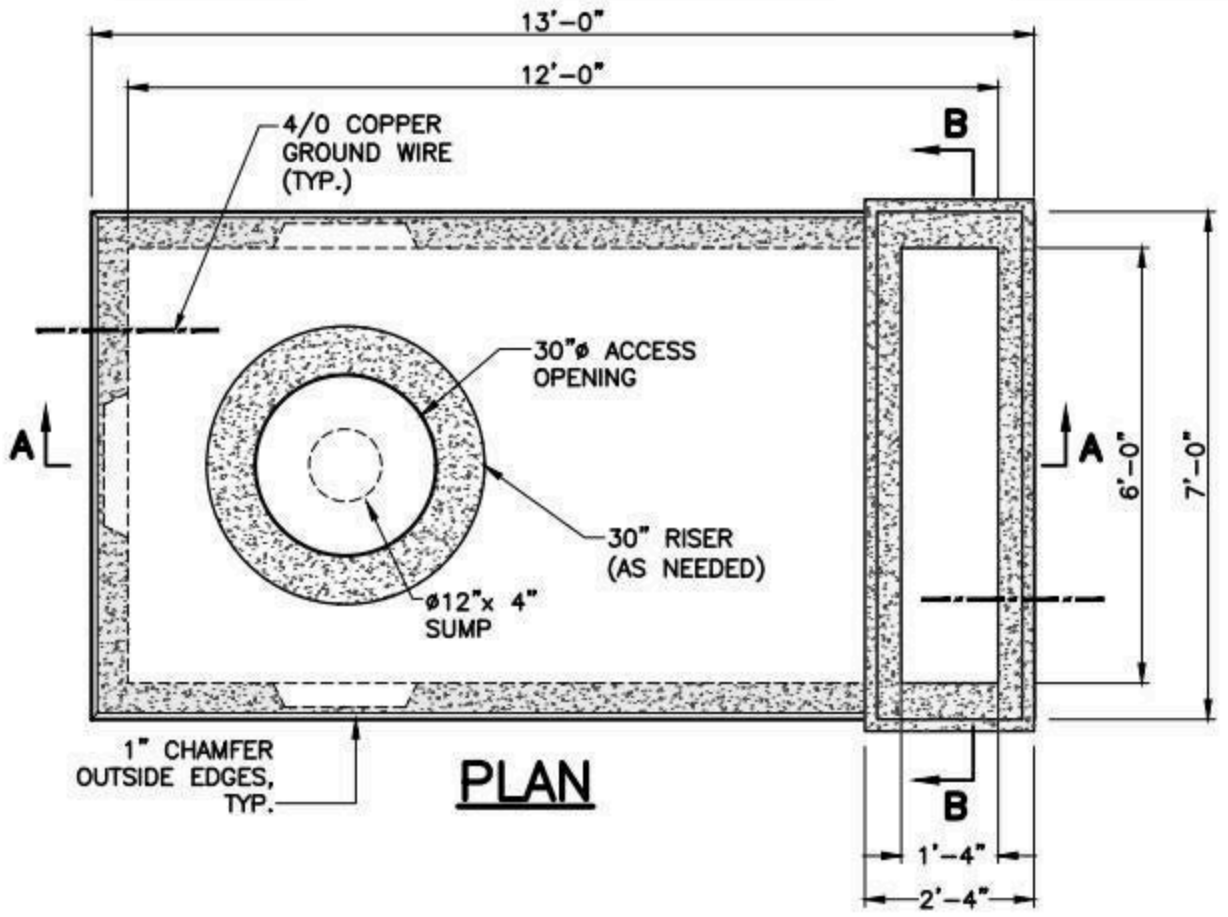

PLAN

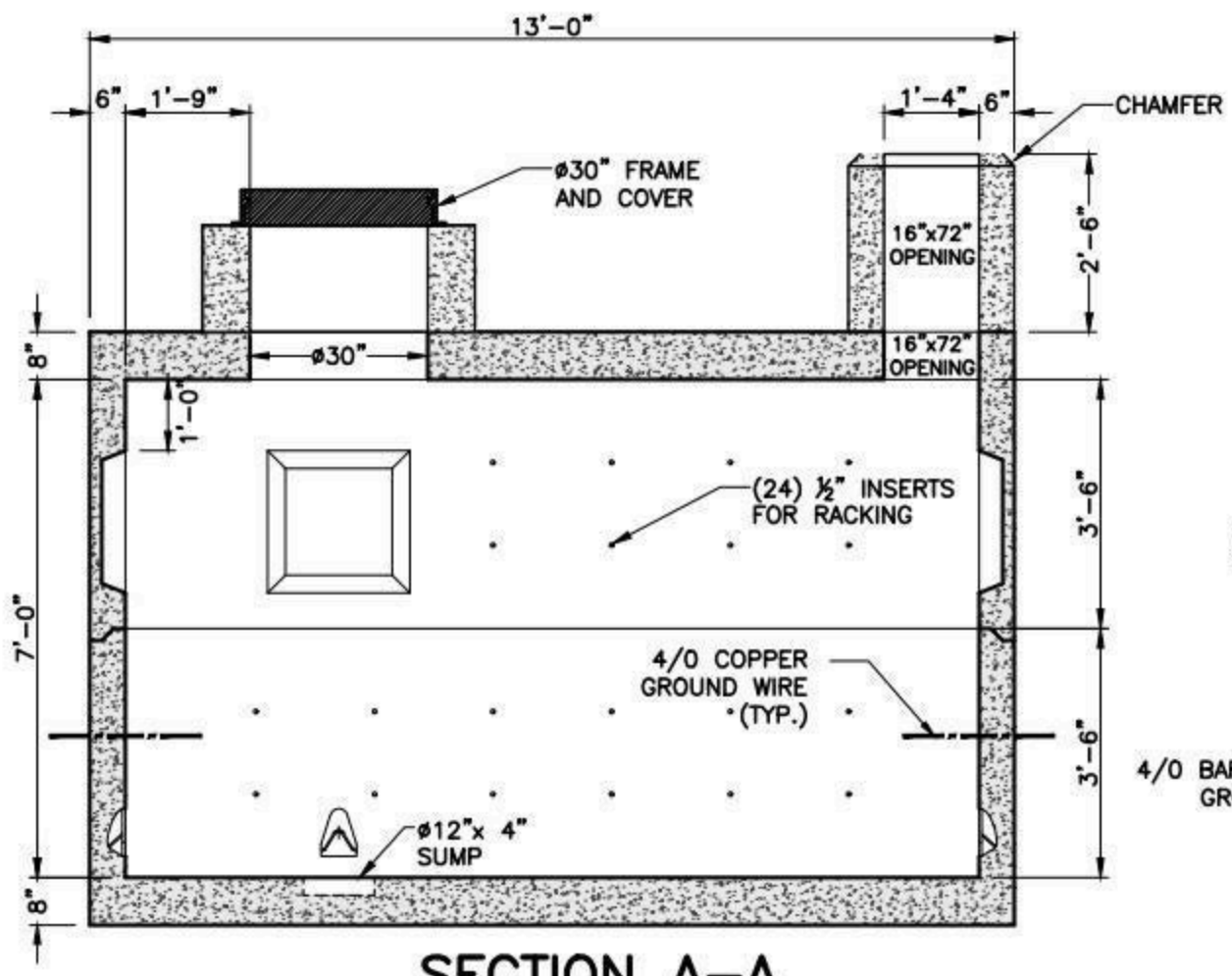

SECTION A-A

OPPOSITE WALL SIMILAR

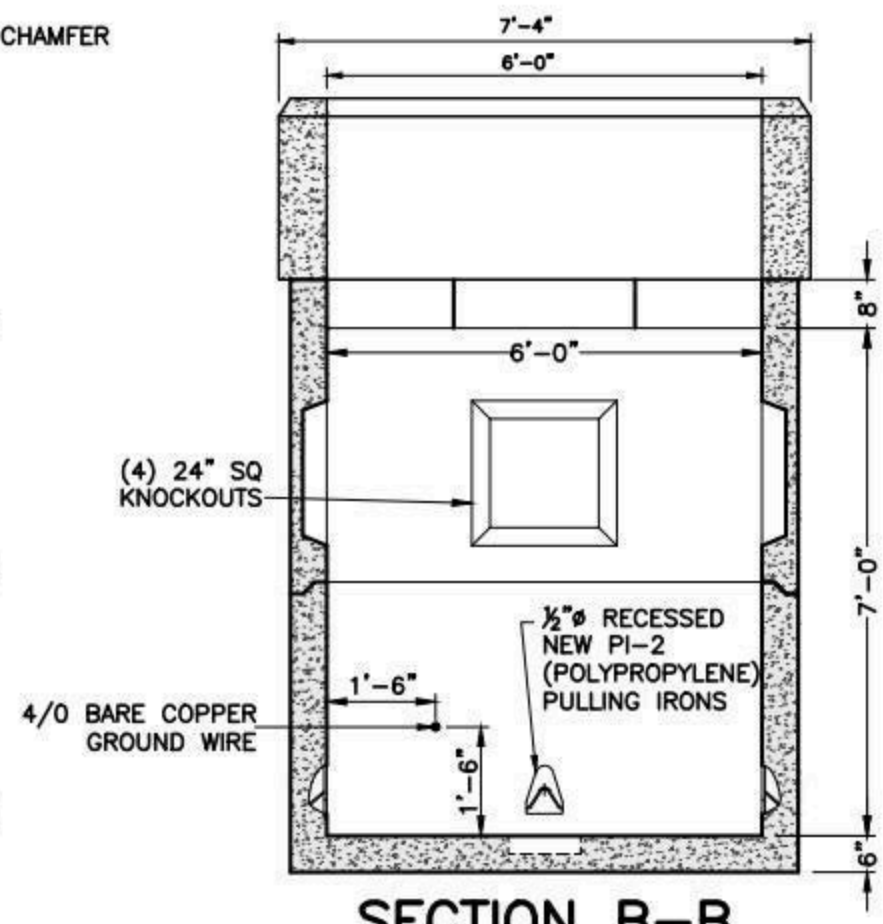

SECTION B-B

OPPOSITE WALL SIMILAR

NOTES:

1. CONCRETE: 5,000 PSI MINIMUM AFTER 28 DAYS.
2. ALL REINFORCEMENT PER ASTM A615, GRADE 60, 1" MIN COVER.
3. DESIGNED FOR HS20-44 LOADING.
4. EXTERIOR COATING PROVIDED.

	WEIGHT
TOP	17,750 LBS
BOTTOM	17,750 LBS
SECTOR CABINET	3,400 LBS
TOTAL	38,900 LBS

SHEA PRODUCT ID: EV-VAULT-R10001-3	FILE NAME: ES-NH MH R10001-3.dwg		
WEIGHT (LBS): 38,900#	DRAWN BY: NMB	DATE: 07/14/2015	PAGE: III.B.3

NPCA CERTIFIED PLANT

Specifications subject to change without notice

SHEA CONCRETE PRODUCTS
New England's Premier Precaster
800-696-7432 (SHEA)
www.sheaconcrete.com
MAILING ADDRESS: 87 HAVERHILL RD AMESBURY, MA 01913

EVERSOURCE-NH 53-102
TRANSFORMER PAD 25-75 KVA

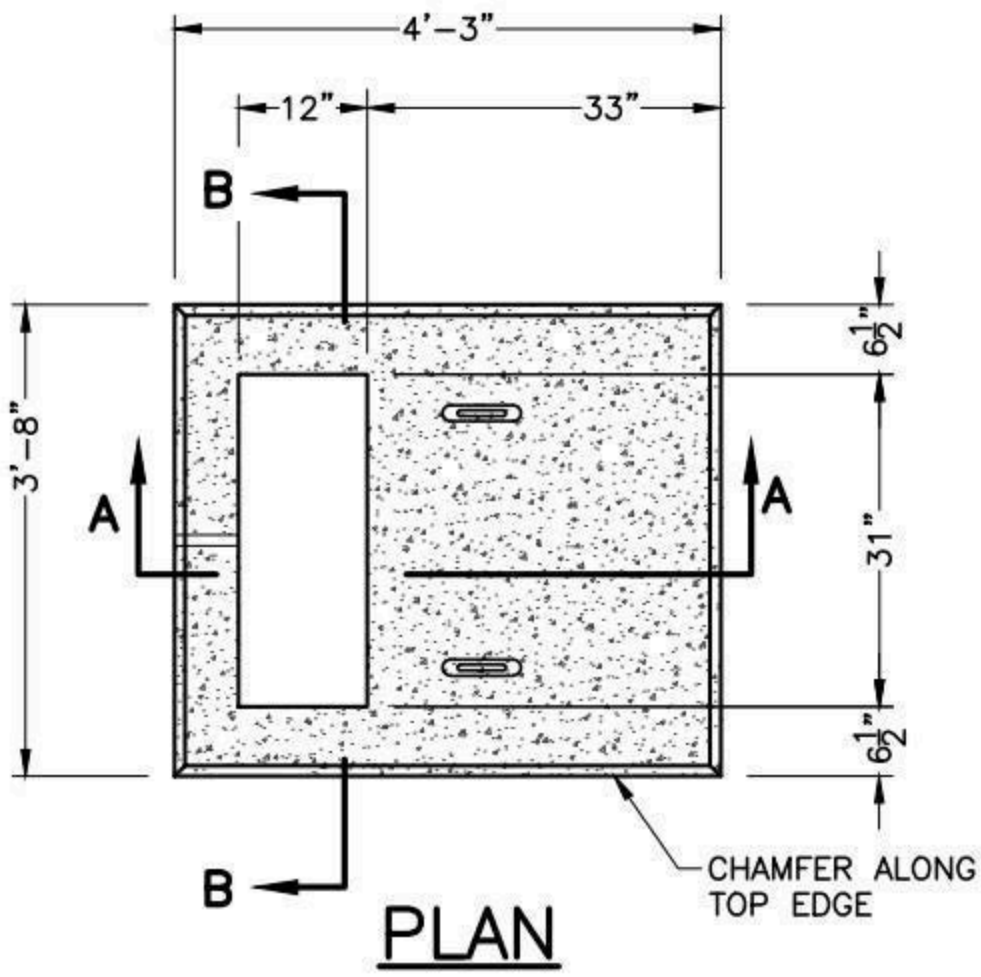

PLAN

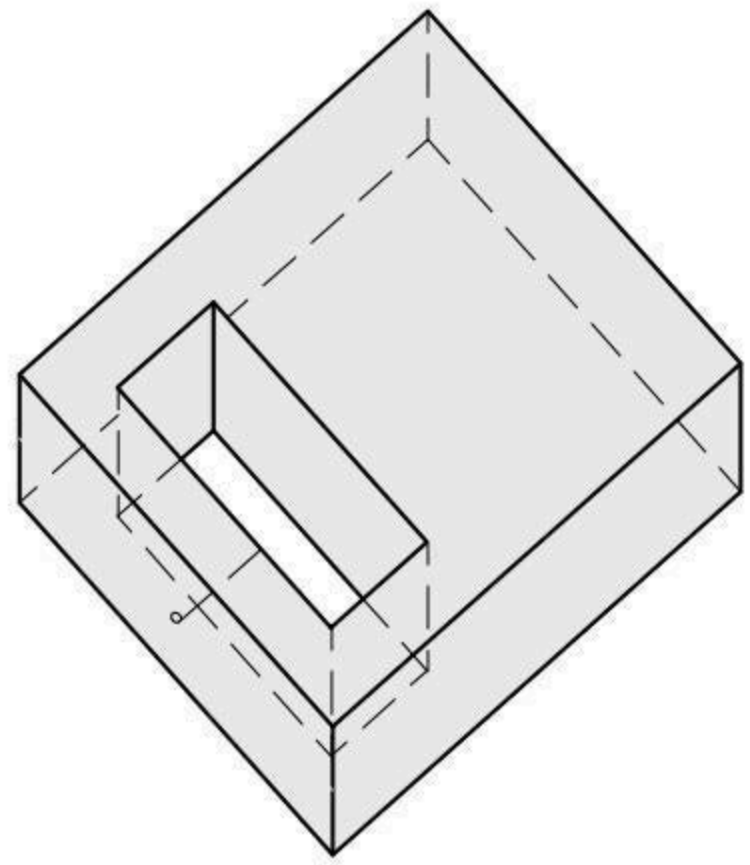

ISOMETRIC

N.T.S.

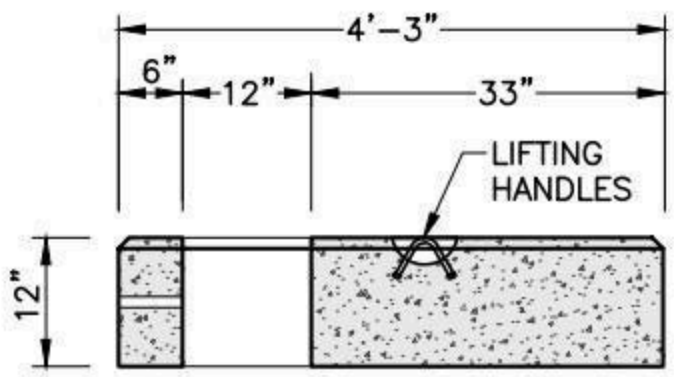

SECTION A-A

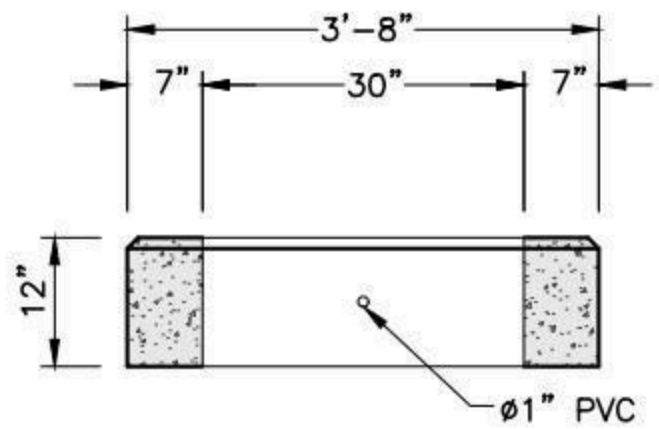

SECTION B-B

NOTES:

1. CONCRETE MINIMUM STRENGTH 4,000 PSI AFTER 28 DAYS.
2. REINFORCEMENT STEEL CONFORMS TO ASTM A615 GRADE 60 #6 REBAR.
3. MEETS OR EXCEEDS EVERSOURCE SPECIFICATIONS.

SHEA PRODUCT ID: 25-75 KVA	FILE NAME: ES-NH TP 53-102			NPCA CERTIFIED PLANT
WEIGHT (LBS): 1,936#	DRAWN BY: MNN	DATE: 01/02/2018	PAGE: III.C.1	

Specifications subject to change without notice

SHEA CONCRETE PRODUCTS
New England's Premier Precaster
800-696-7432 (SHEA)
www.sheaconcrete.com
MAILING ADDRESS: 87 HAVERHILL RD AMESBURY, MA 01913

EVERSOURCE-NH 53-102L TRANSFORMER PAD 100 TO 250 KVA

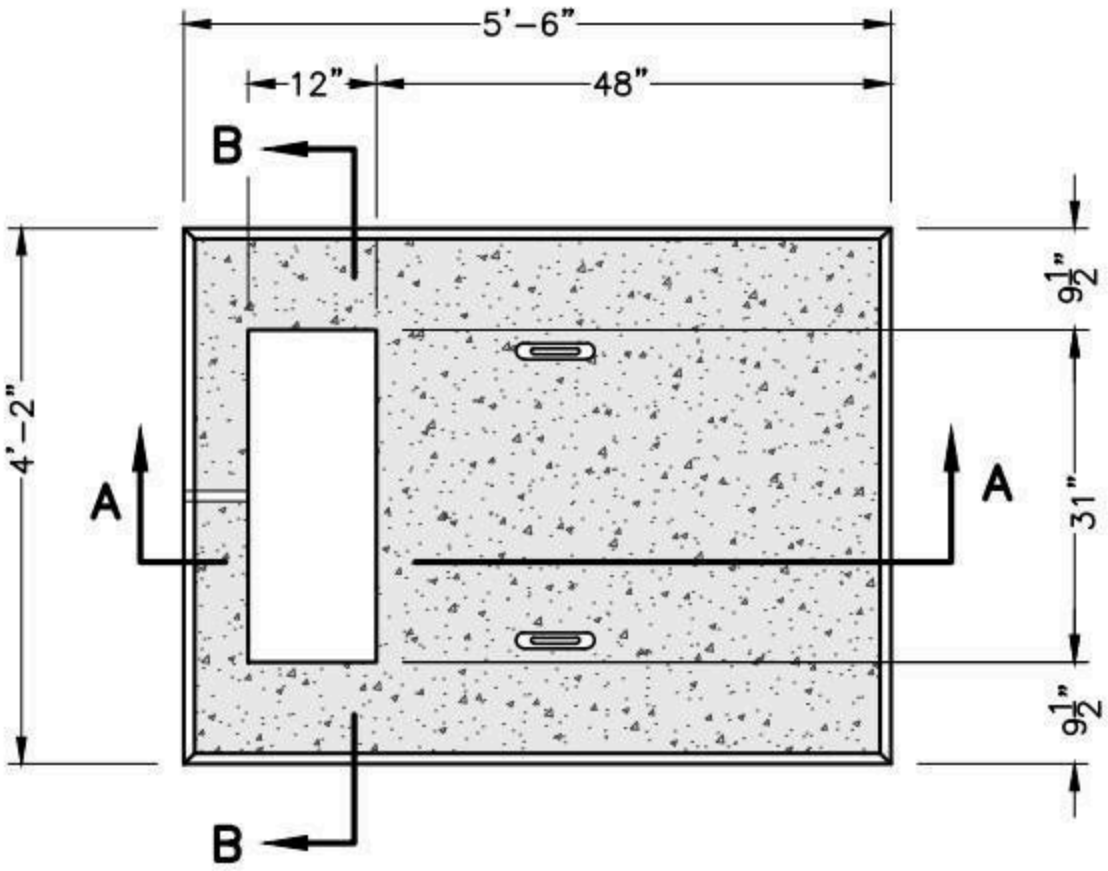

PLAN

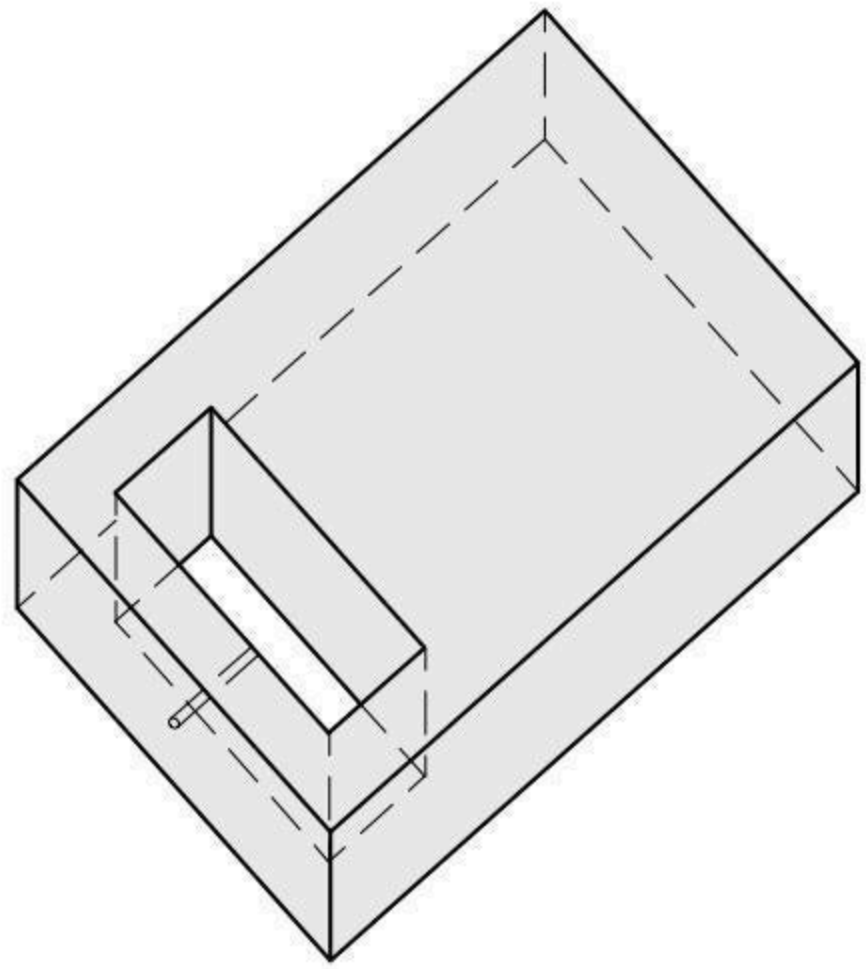

ISOMETRIC

N.T.S.

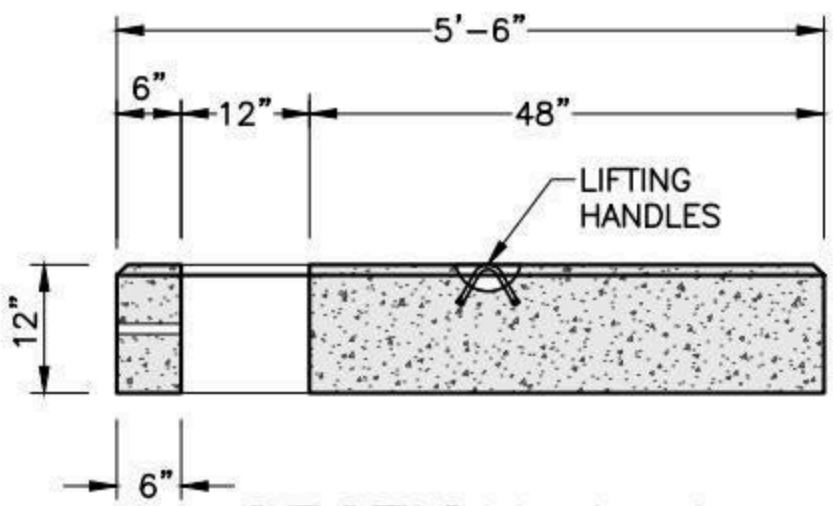

SECTION A-A

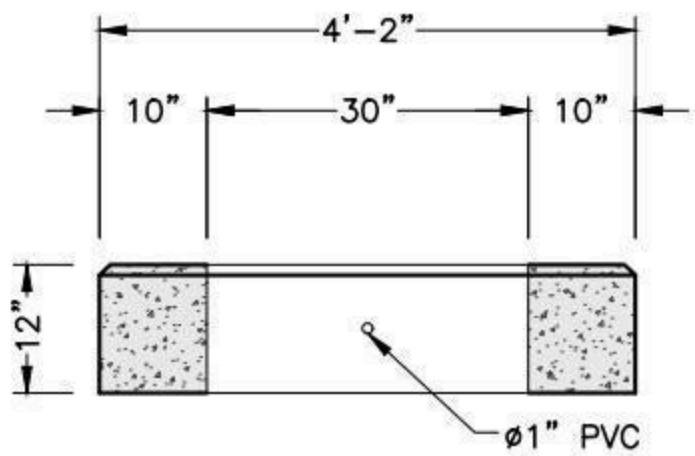

SECTION B-B

NOTES:

1. CONCRETE MINIMUM STRENGTH 4,000 PSI AFTER 28 DAYS.
2. REINFORCEMENT STEEL CONFORMS TO ASTM A615 GRADE 60 #6 REBAR.
3. MEETS OR EXCEEDS EVERSOURCE SPECIFICATIONS.

SHEA PRODUCT ID: 100-250 KVA	FILE NAME: ES-NH TP 53-102L		
WEIGHT (LBS): 3,022#	DRAWN BY: MNN	DATE: 01/02/2018	PAGE: III.C.2

NPCA CERTIFIED PLANT

773 Salem Street-Wilmington, MA | 153 Cranberry Hwy-Rochester, MA | 87 Haverhill Road-Amesbury, MA | 160 Old Turnpike Rd-Nottingham, NH

Specifications subject to change without notice

SHEA CONCRETE PRODUCTS
New England's Premier Precaster
800-696-7432 (SHEA)
www.sheaconcrete.com
MAILING ADDRESS: 87 HAVERHILL RD AMESBURY, MA 01913

EVERSOURCE-NH 53-111 3-PHASE TRANSFORMER PAD 75-500 KVA

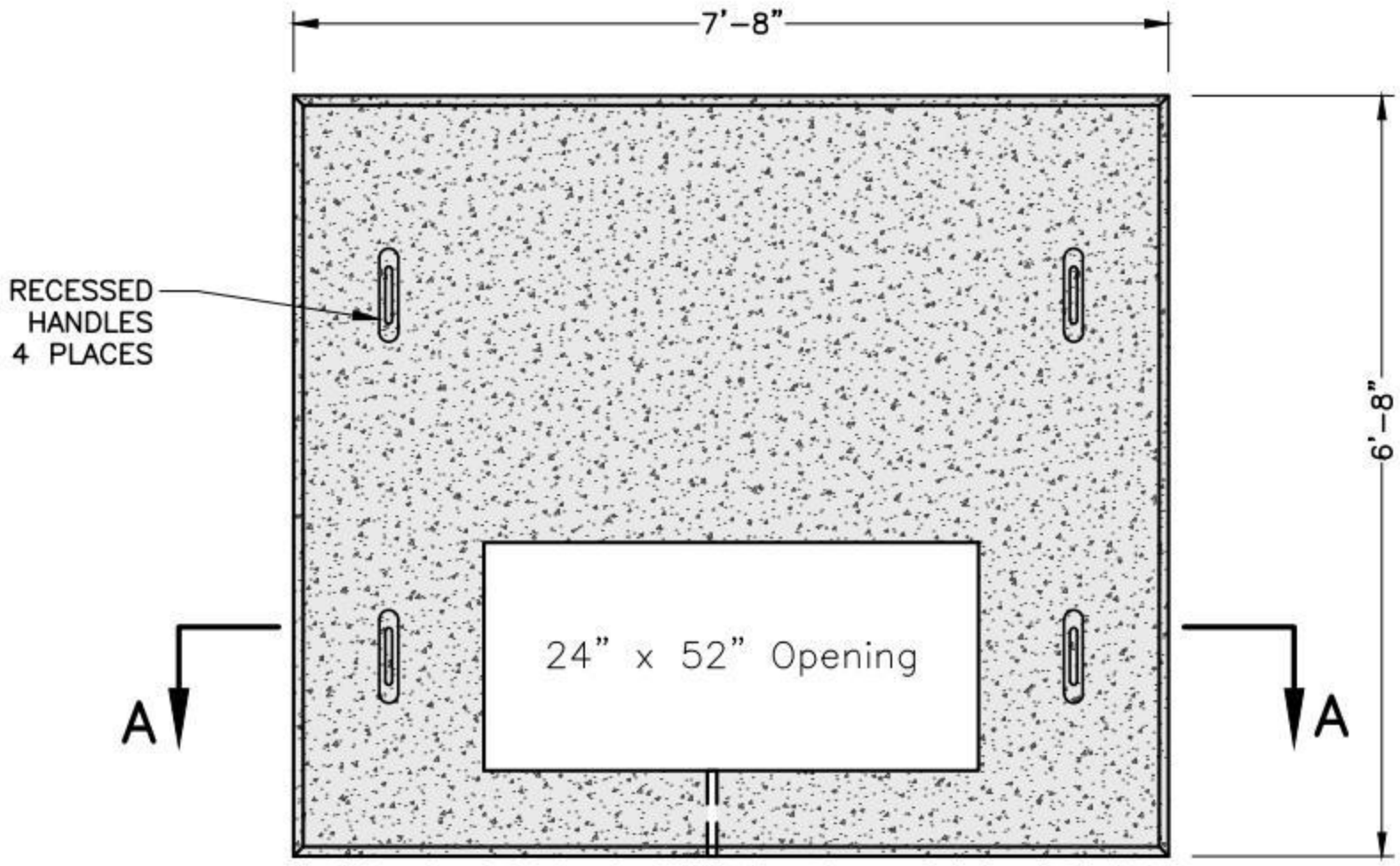

PLAN

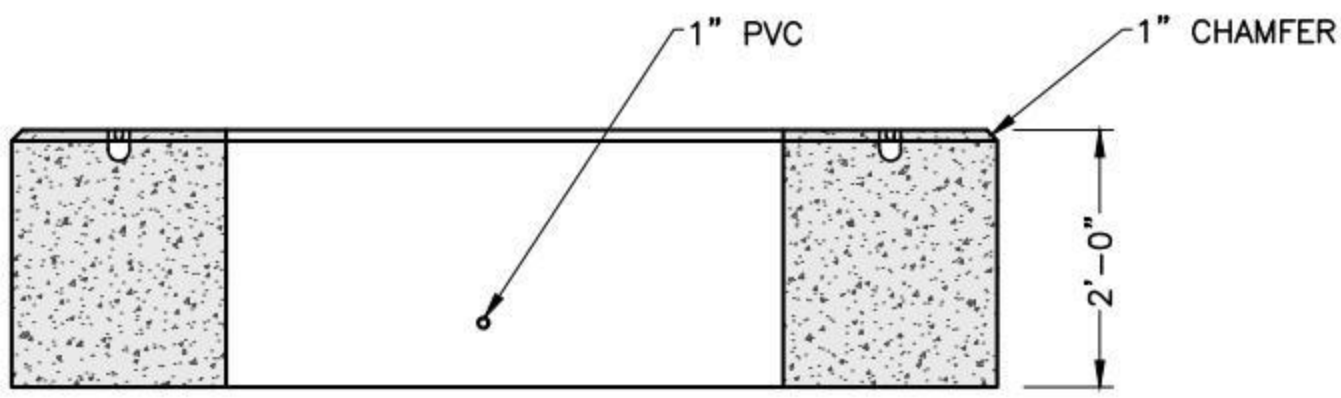

SECTION A-A

NOTES:
1. CONCRETE: 4,000 PSI MIN. AFTER 28 DAYS
2. REINFORCEMENT STEEL CONFORMS TO ASTM A615 GRADE 60 #6 REBAR.
3. PAD MEETS OR EXCEEDS EVERSOURCE SPECIFICATIONS

SHEA PRODUCT ID:	53-111	FILE NAME:	ES-NH TP 53-111		
WEIGHT (LBS):	12,600#	DRAWN BY: NMB	DATE: 03/21/2018	PAGE: III.C.3	

NPCA CERTIFIED PLANT

Specifications subject to change without notice

SHEA CONCRETE PRODUCTS
New England's Premier Precaster
800-696-7432 (SHEA)
www.sheaconcrete.com
MAILING ADDRESS: 87 HAVERHILL RD AMESBURY, MA 01913

EVERSOURCE-NH 53-116 3-PHASE TRANSFORMER PAD 750-2000 KVA

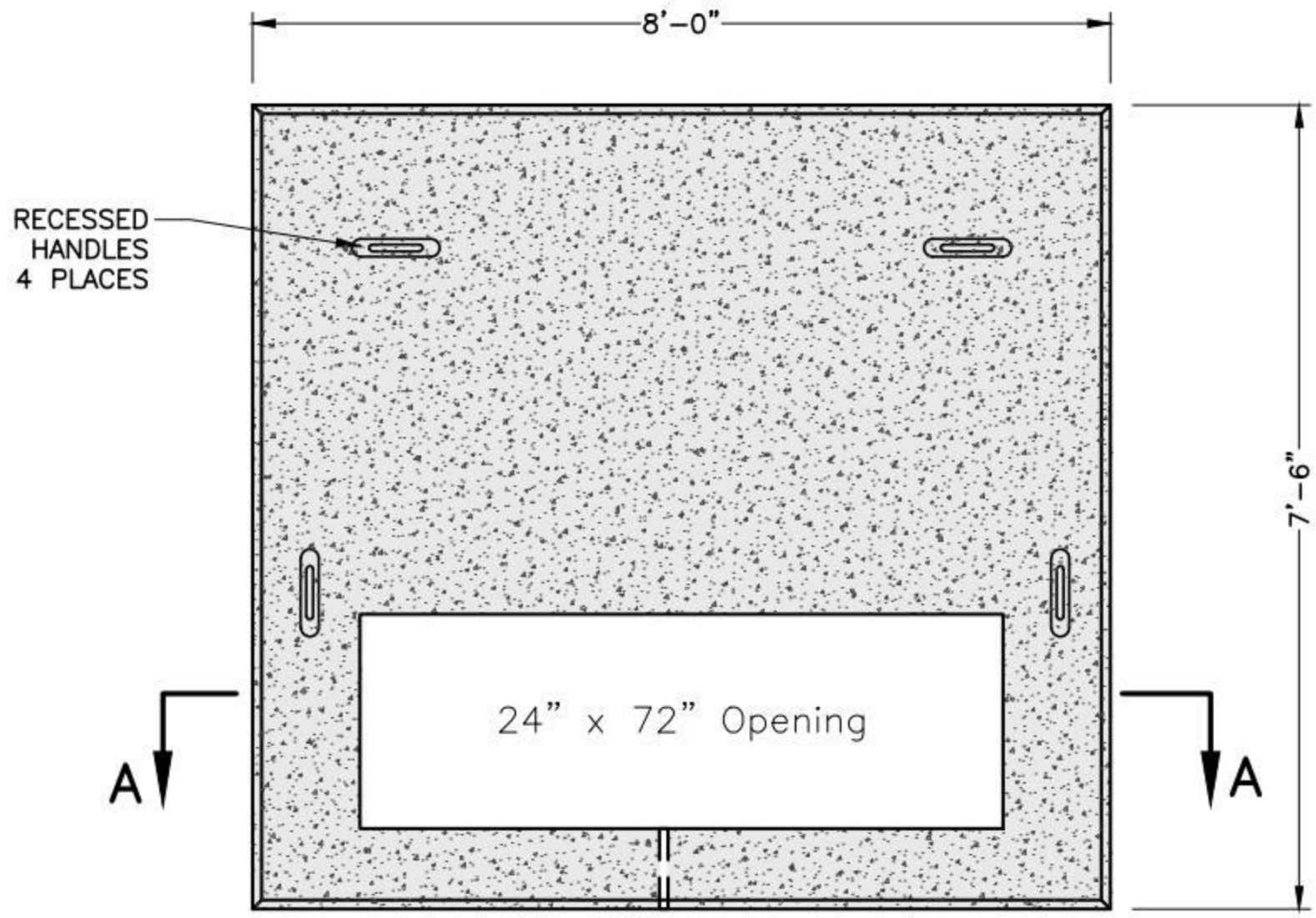

PLAN

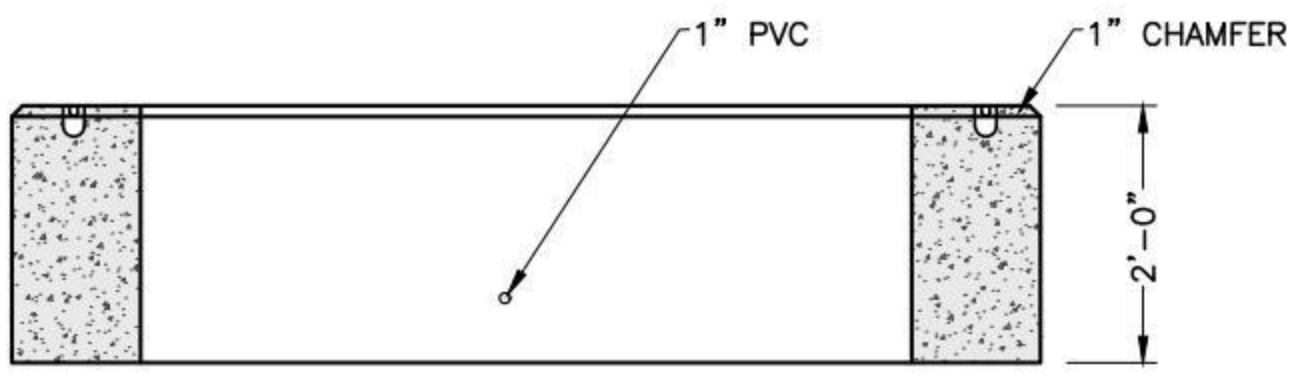

SECTION A-A

NOTES:
1. CONCRETE: 4,000 PSI MIN. AFTER 28 DAYS
2. REINFORCEMENT STEEL CONFORMS TO ASTM A615 GRADE 60 #6 REBAR.
3. PAD MEETS OR EXCEEDS EVERSOURCE SPECIFICATIONS.

SHEA PRODUCT ID:	53-116	FILE NAME:	ES-NH TP 53-116		
WEIGHT (LBS):	14,200#	DRAWN BY: NMB	DATE: 03/21/2018	PAGE: III.C.4	NPCA CERTIFIED PLANT

Specifications subject to change without notice

SHEA CONCRETE PRODUCTS
New England's Premier Precaster
800-696-7432 (SHEA)
www.sheaconcrete.com
MAILING ADDRESS: 87 HAVERHILL RD AMESBURY, MA 01913

NATIONAL GRID HANDHOLE
38" X 54" X 24" UM19

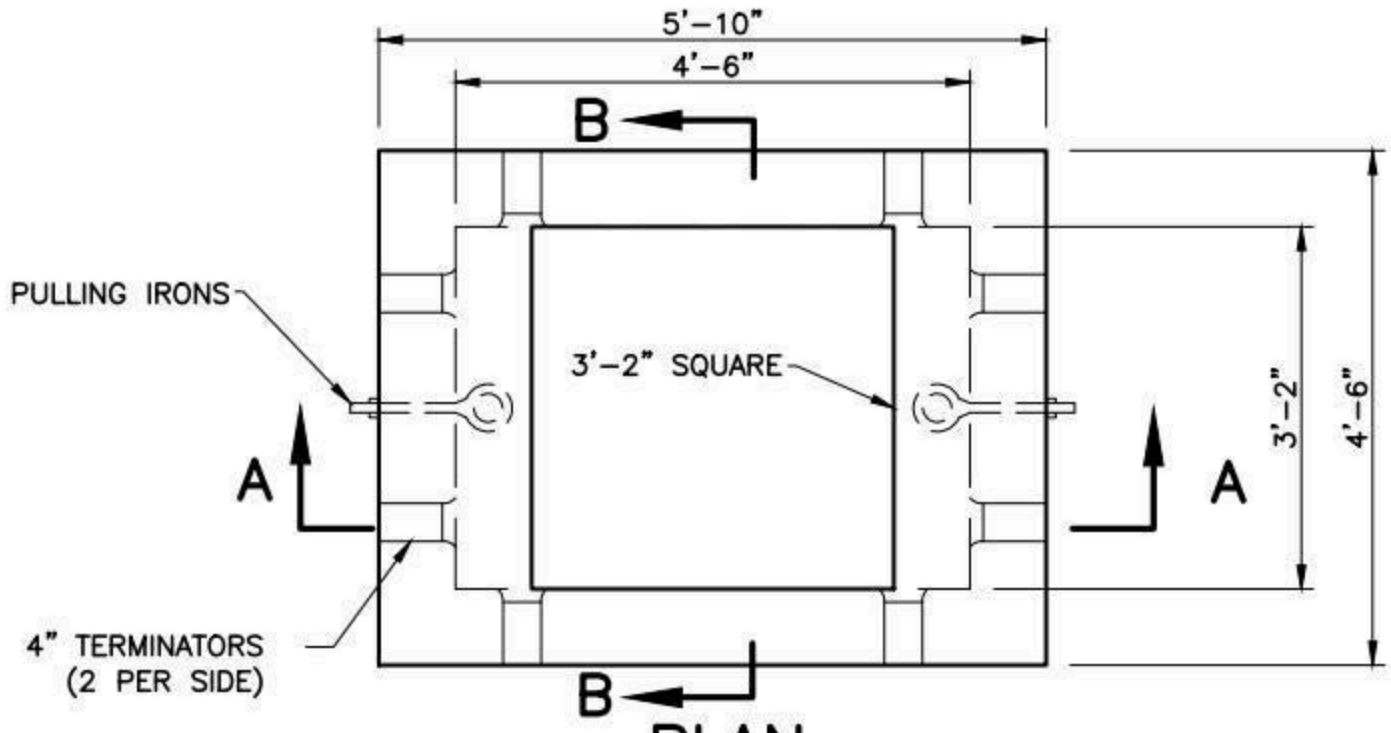

PLAN

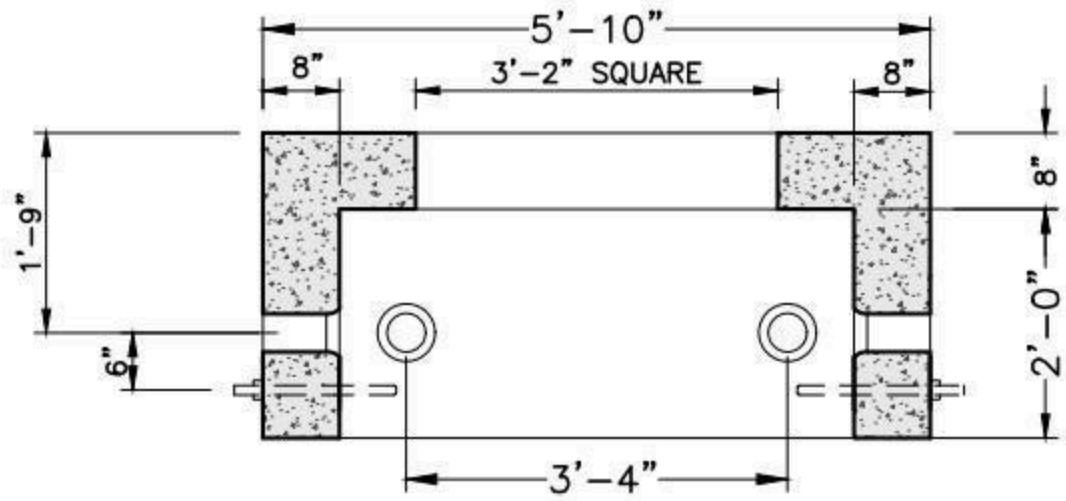

SECTION A-A

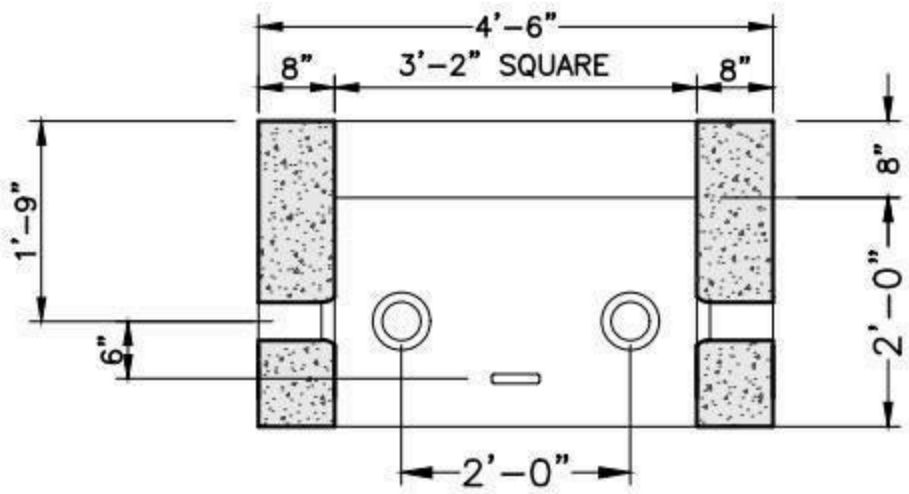

SECTION B-B

NOTES:

1. CONCRETE: 5,000 PSI MINIMUM AFTER 28 DAYS.
2. DESIGN LOADING: AASHTO HS20-44, 0 TO 5 FEET COVER.
3. DESIGN SPECIFICATIONS – ACI 318 & AASHTO LOAD FACTOR DESIGN METHOD.
4. STEEL REINFORCEMENT CONFORMS TO ASTM A615, GRADE 60. MINIMUM STEEL COVER 1".
5. ALL TERMINATORS SHALL HAVE BELL ENDS FLUSH WITH THE INSIDE WALL.

SHEA PRODUCT ID: NGHH38X54-24	FILE NAME: NGHH38X54-24		
WEIGHT (LBS): 5050	DRAWN BY: L.P.	DATE: 12/21/2017	PAGE: IV.A.1

NPCA CERTIFIED PLANT

Specifications subject to change without notice

SHEA CONCRETE PRODUCTS
New England's Premier Precaster
800-696-7432 (SHEA)
www.sheaconcrete.com
MAILING ADDRESS: 87 HAVERHILL RD AMESBURY, MA 01913

NATIONAL GRID HANDHOLE
38" X 54" X 48" UM19

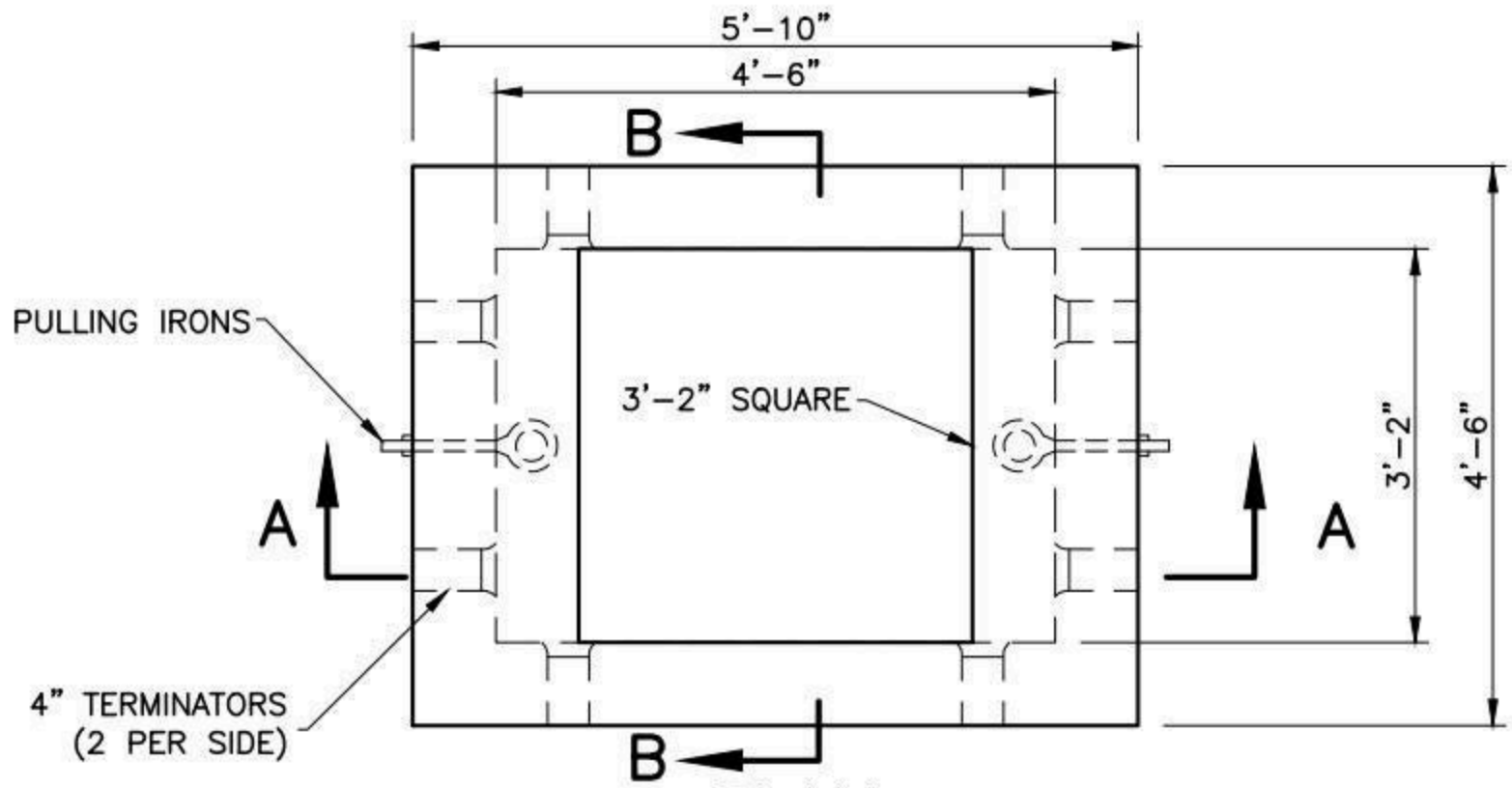

PLAN

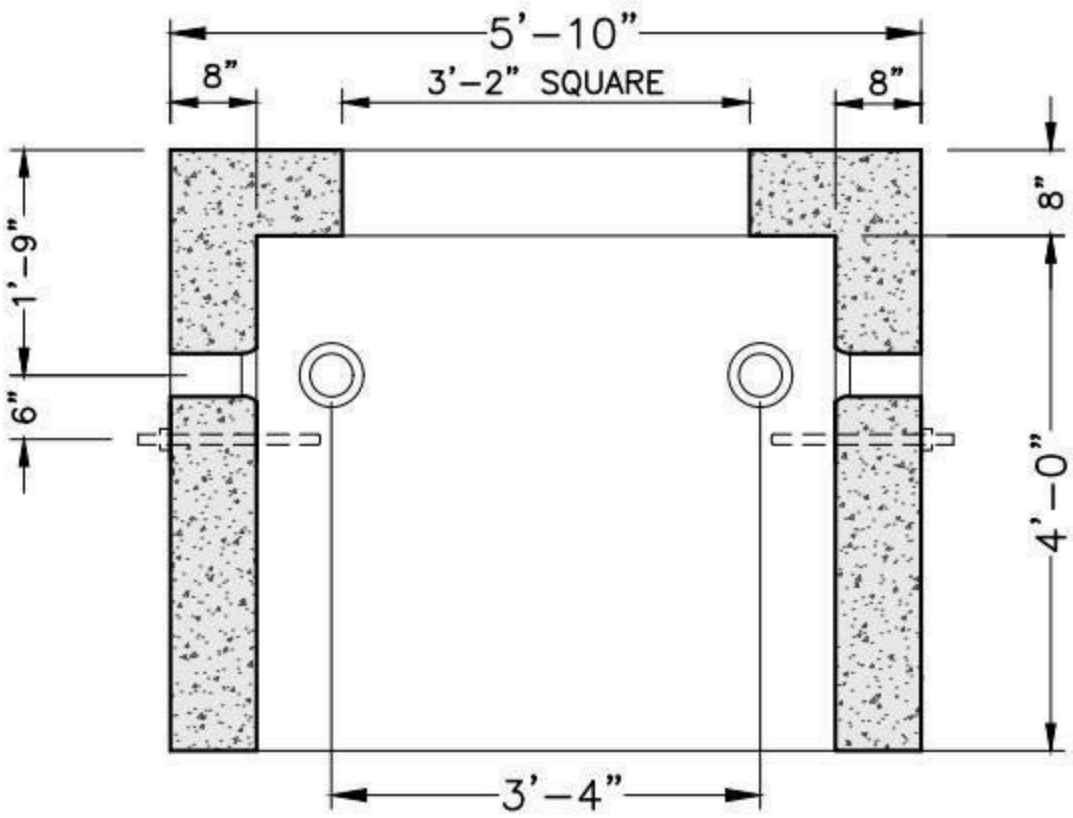

SECTION A-A

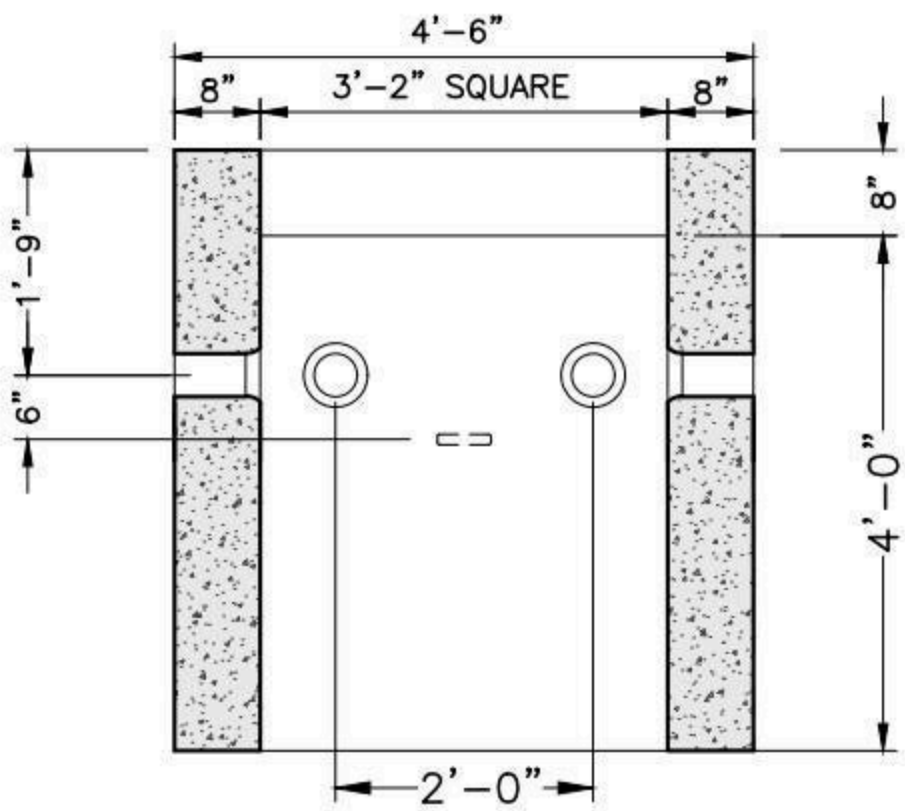

SECTION B-B

NOTES:

1. CONCRETE: 5,000 PSI MINIMUM AFTER 28 DAYS.
2. DESIGN LOADING: AASHTO HS20-44, 0 TO 5 FEET COVER.
3. DESIGN SPECIFICATIONS - ACI 318 & AASHTO LOAD FACTOR DESIGN METHOD.
4. STEEL REINFORCEMENT CONFORMS TO ASTM A615, GRADE 60. MINIMUM STEEL COVER 1".
5. ALL TERMINATORS SHALL HAVE BELL ENDS FLUSH WITH THE INSIDE WALL.

SHEA PRODUCT ID: NGHH38X54-48	FILE NAME: NGHH38X54-48			NPCA CERTIFIED PLANT
WEIGHT (LBS): 8530	DRAWN BY: L.P.	DATE: 12/21/2017	PAGE: IV.A.2	

Specifications subject to change without notice

SHEA CONCRETE PRODUCTS
New England's Premier Precaster
800-696-7432 (SHEA)
www.sheaconcrete.com
MAILING ADDRESS: 87 HAVERHILL RD AMESBURY, MA 01913

NATIONAL GRID LIGHT POLE BASE 24"SQ X 48"H SF01

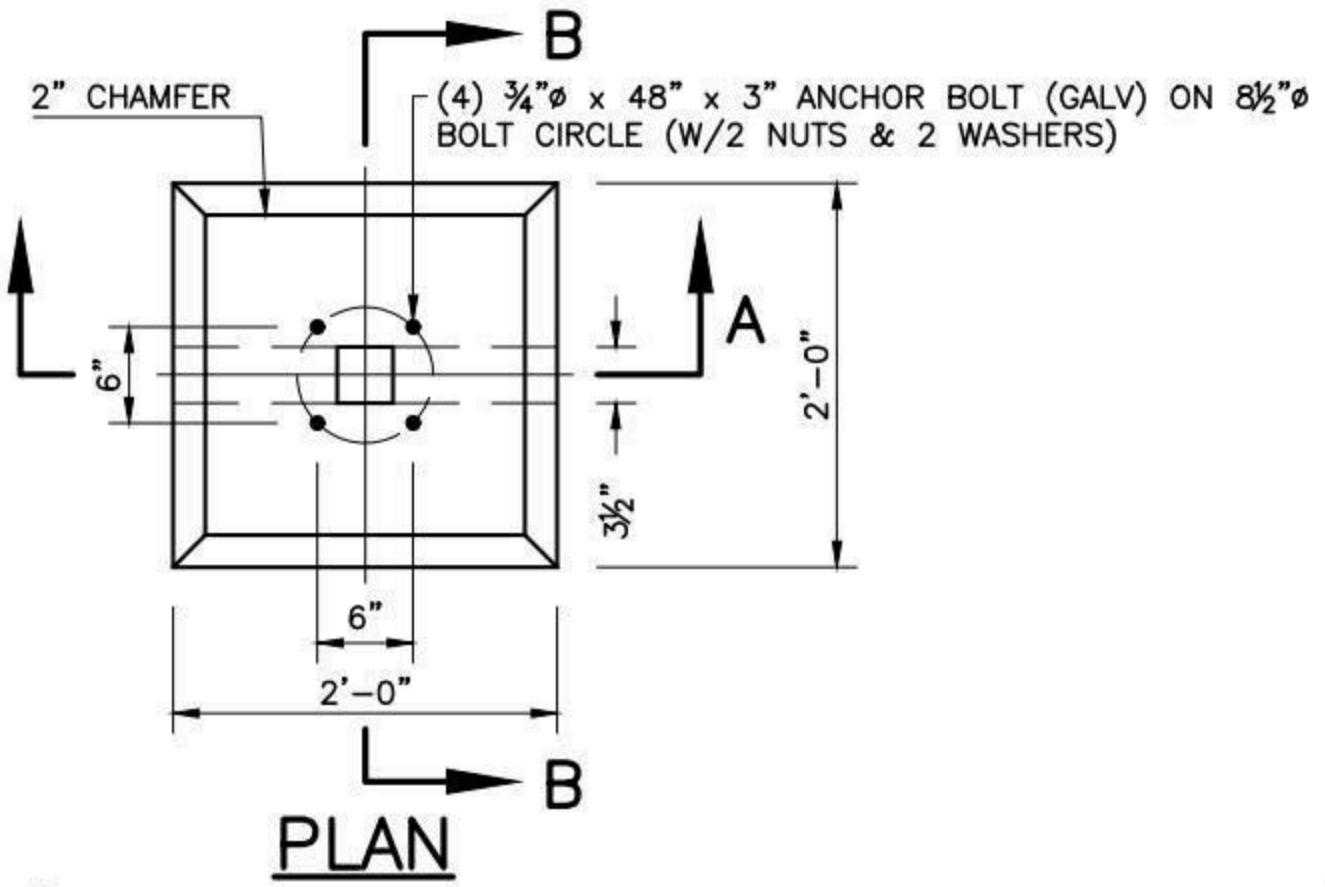

PLAN

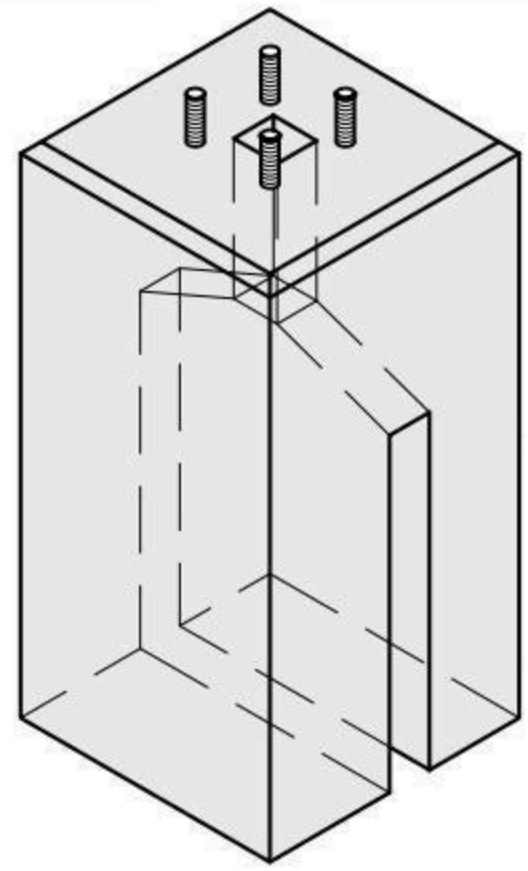

SCHEMATIC ISOMETRIC
N.T.S.

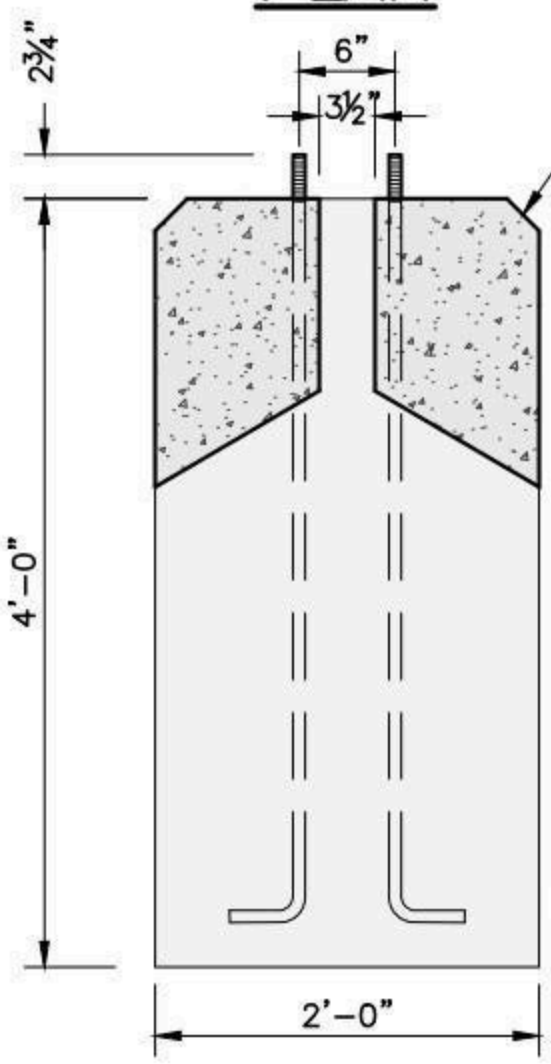

SECTION A–A

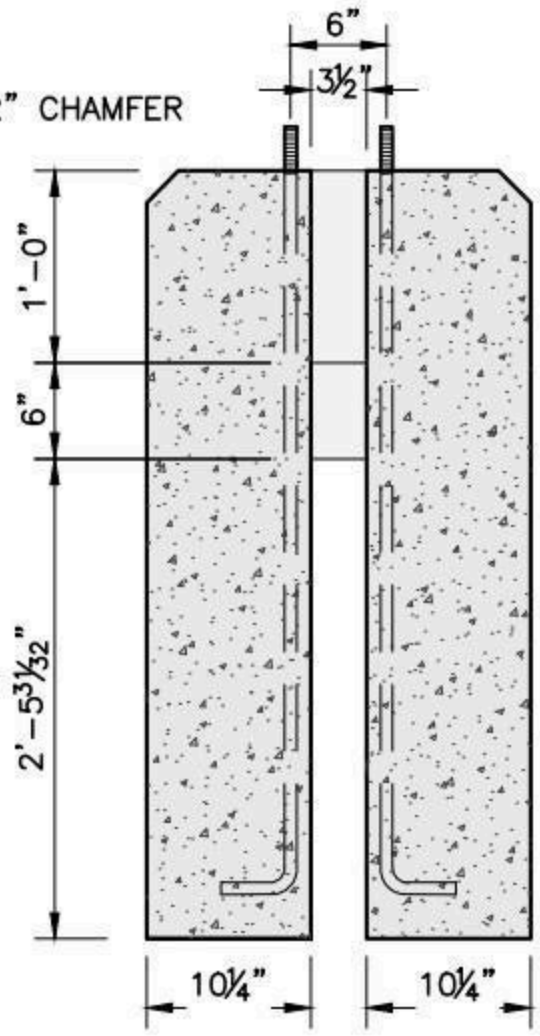

SECTION B–B

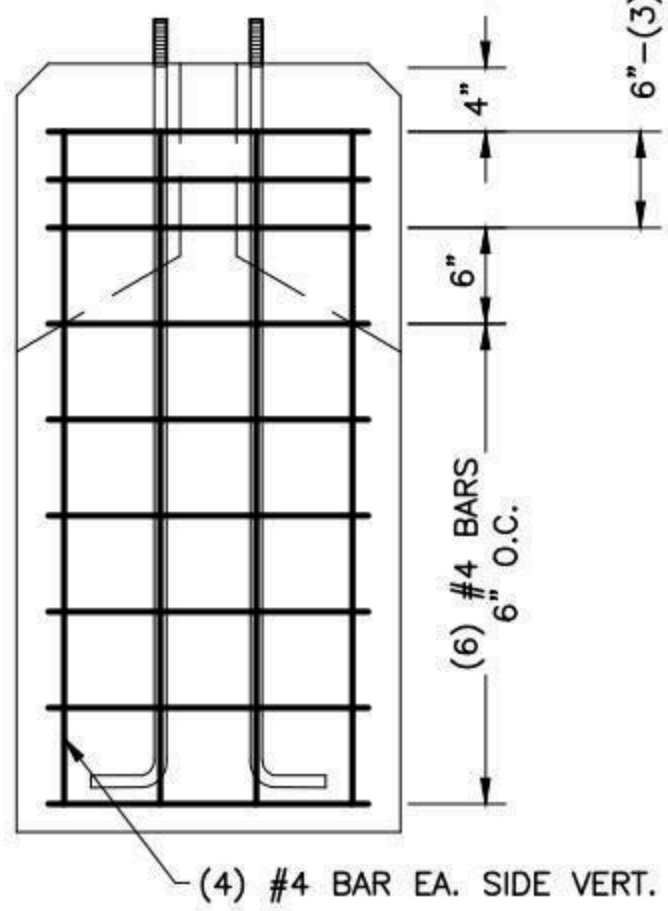

REINFORCEMENT LAYOUT

NOTES:

1. CONCRETE: 5,000 PSI MINIMUM AFTER 28 DAYS.
2. STEEL REINFORCEMENT CONFORMS TO ASTM A615, GRADE 60. MINIMUM STEEL COVER 1".
3. ANCHOR BOLTS: (4) ¾" DIAMETER X 48" X 3" L-SHAPED GALVANIZED STEEL, EACH WITH (2) HEAVY HEX HEAD NUTS AND (2) ROUND WASHERS. MINIMUM 12" THREAD LENGTH. ALL HARDWARE SHALL CONFORM TO ASTM A36, A563, AND F844, RESPECTIVELY. FABRICATED IN ACCORDANCE WITH ASTM F1554 AND HOT-DIP GALVANIZED PER A153.

SHEA PRODUCT ID: NGLPBMS6640	FILE NAME: NGMS6640LPB		
WEIGHT (LBS): 2100	DRAWN BY: L.P.	DATE: 12/21/2017	PAGE: IV.B.1

NPCA CERTIFIED PLANT

773 Salem Street–Wilmington, MA | 153 Cranberry Hwy–Rochester, MA | 87 Haverhill Road–Amesbury, MA | 160 Old Turnpike Rd–Nottingham, NH

Specifications subject to change without notice

SHEA CONCRETE PRODUCTS
New England's Premier Precaster
800-696-7432 (SHEA)
www.sheaconcrete.com
MAILING ADDRESS: 87 HAVERHILL RD AMESBURY, MA 01913

NATIONAL GRID LIGHT POLE BASE 24"SQ X 48"H SF02

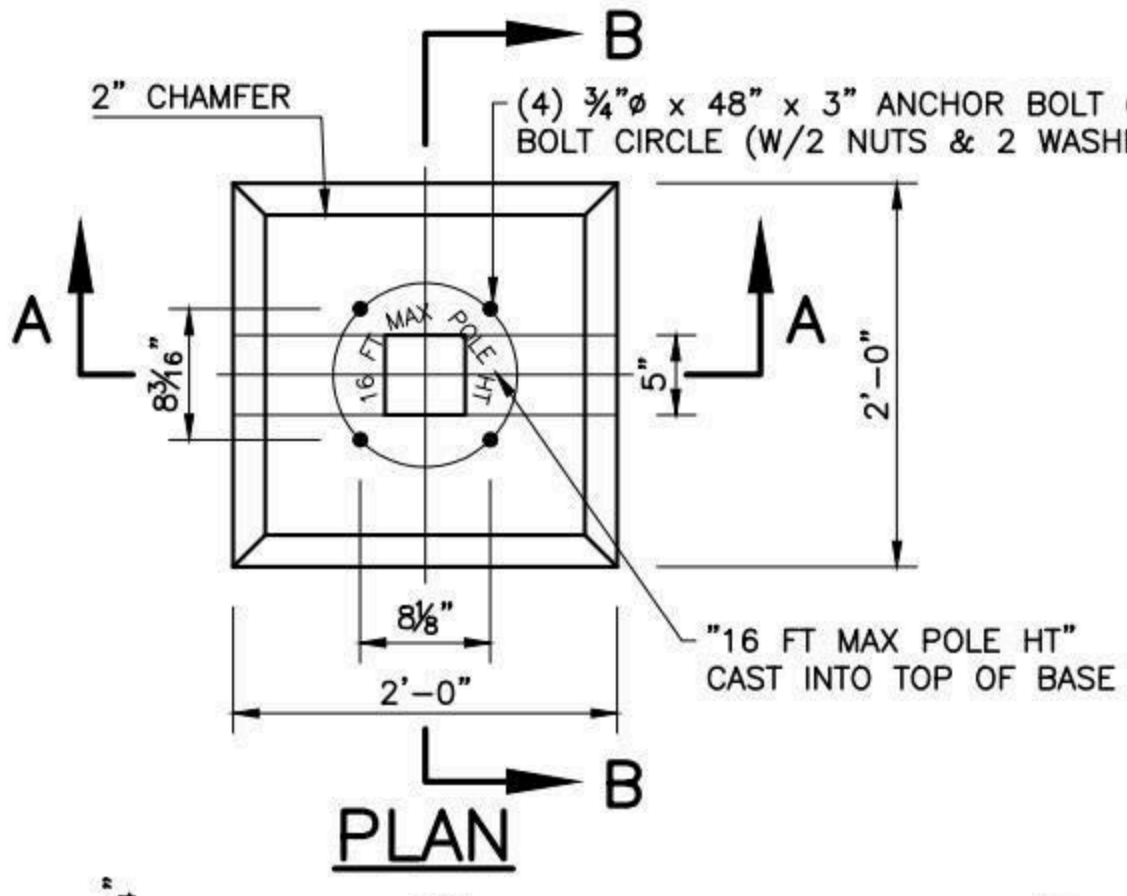

PLAN

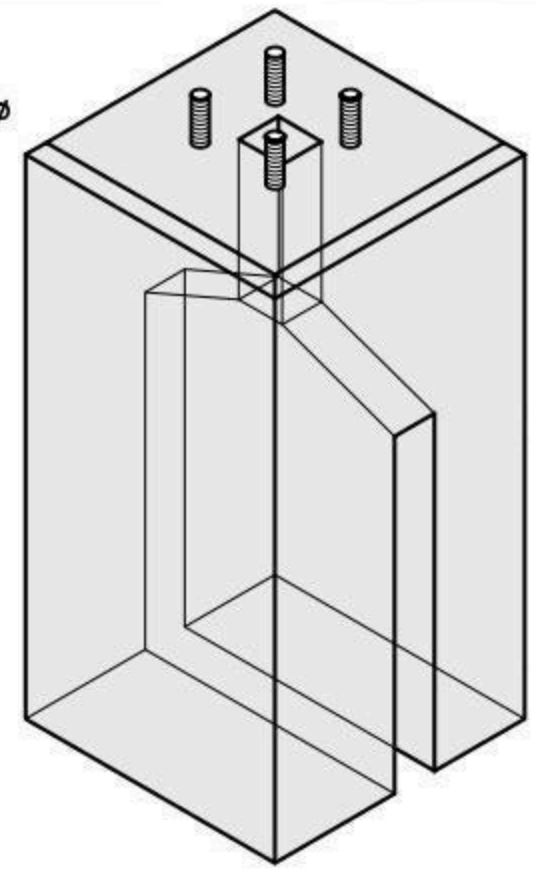

SCHEMATIC ISOMETRIC
N.T.S.

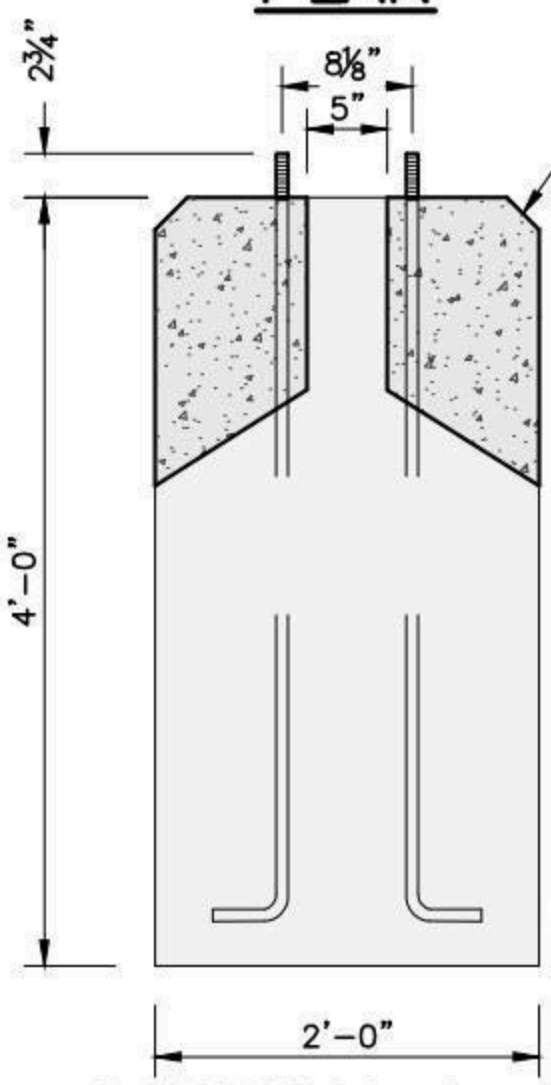

SECTION A–A

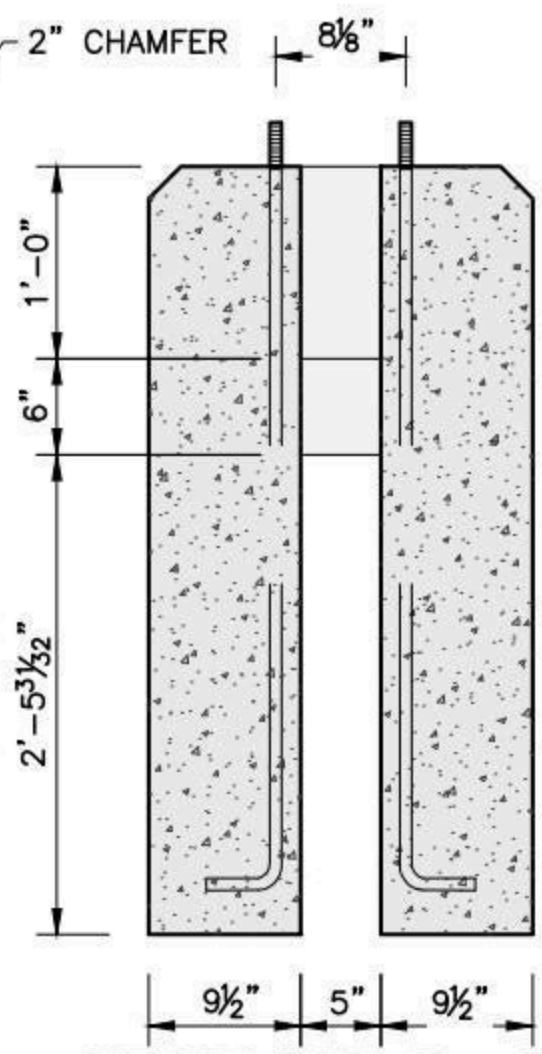

SECTION B–B

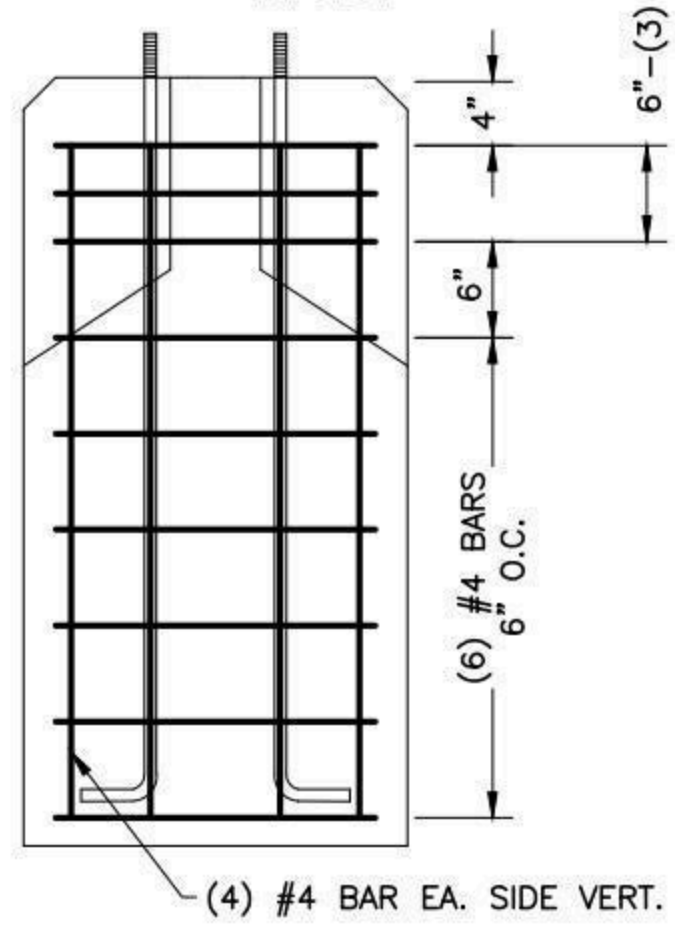

REINFORCEMENT LAYOUT

NOTES:

1. CONCRETE: 5,000 PSI MINIMUM AFTER 28 DAYS.
2. STEEL REINFORCEMENT CONFORMS TO ASTM A615, GRADE 60. MINIMUM STEEL COVER 1".
3. ANCHOR BOLTS: (4) ¾" DIAMETER X 48" X 3" L-SHAPED GALVANIZED STEEL, EACH WITH (2) HEAVY HEX HEAD NUTS AND (2) ROUND WASHERS. MINIMUM 12" THREAD LENGTH. ALL HARDWARE SHALL CONFORM TO ASTM A36, A563, AND F844, RESPECTIVELY. FABRICATED IN ACCORDANCE WITH ASTM F1554 AND HOT-DIP GALVANIZED PER A153.

SHEA PRODUCT ID: NGLPBMS6641	FILE NAME: NGMS6641LPB		
WEIGHT (LBS): 2100	DRAWN BY: L.P.	DATE: 12/21/2017	PAGE: IV.B.2

NPCA CERTIFIED PLANT

773 Salem Street–Wilmington, MA | 153 Cranberry Hwy–Rochester, MA | 87 Haverhill Road–Amesbury, MA | 160 Old Turnpike Rd–Nottingham, NH

Specifications subject to change without notice

SHEA CONCRETE PRODUCTS
New England's Premier Precaster
800-696-7432 (SHEA)
www.sheaconcrete.com
MAILING ADDRESS: 87 HAVERHILL RD AMESBURY, MA 01913

NATIONAL GRID LIGHT POLE BASE 24"SQ X 48"H SF03

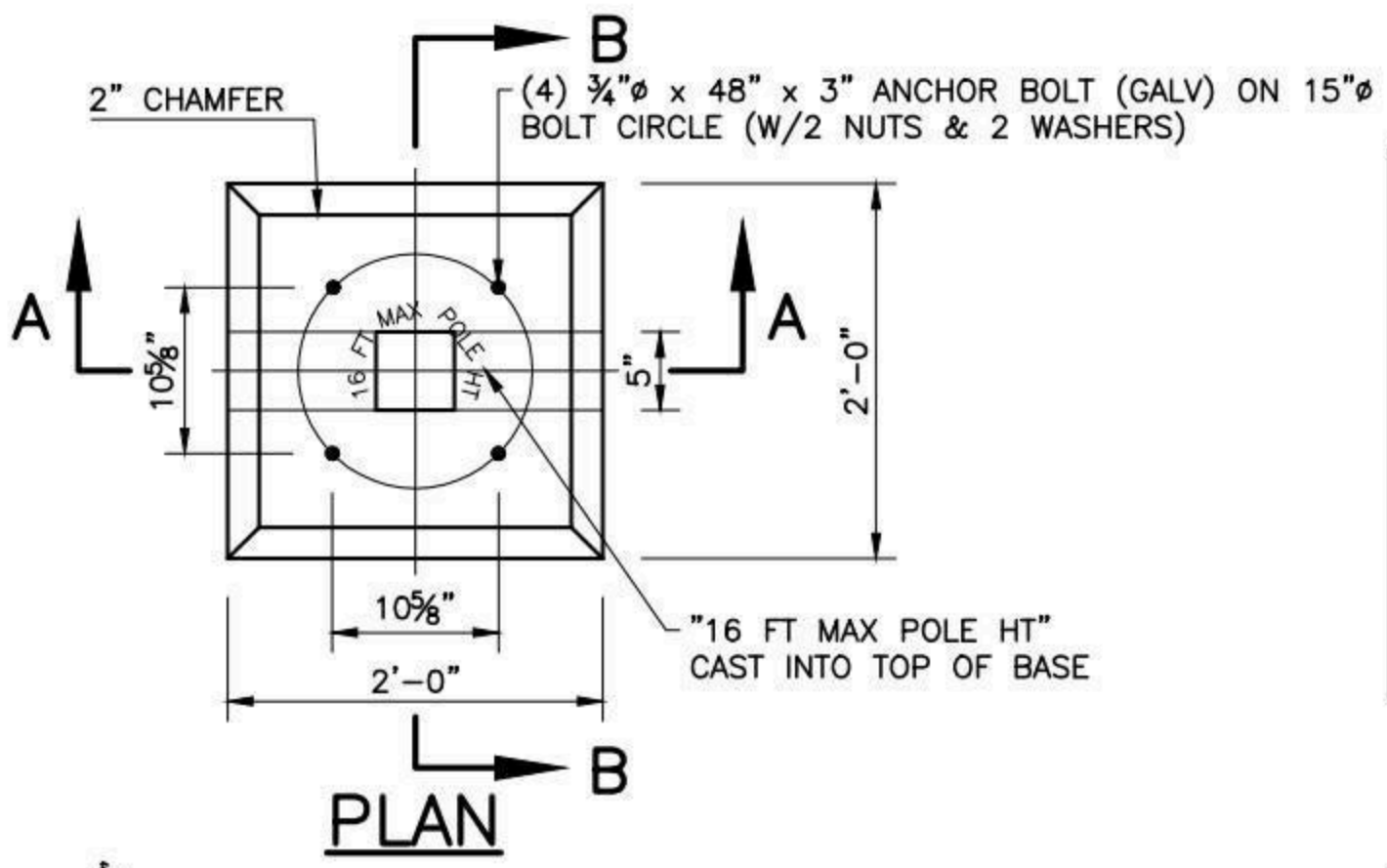

PLAN

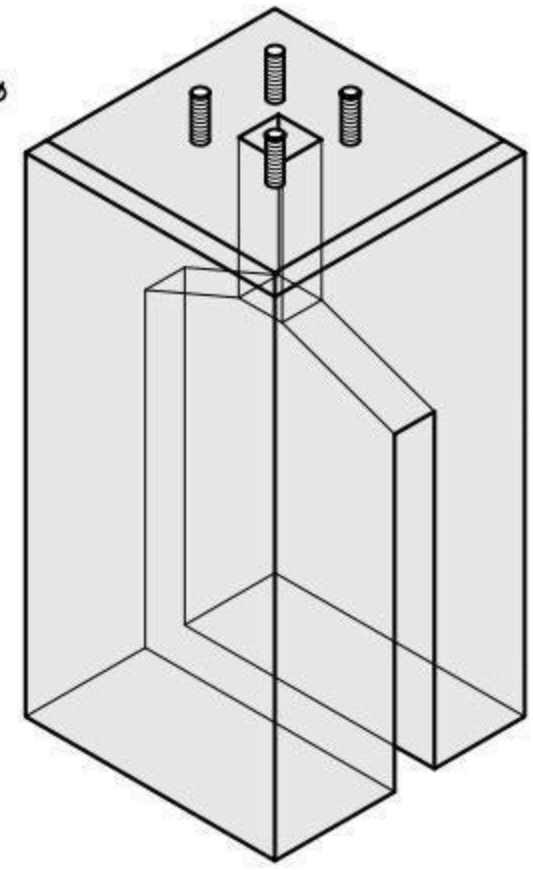

SCHEMATIC ISOMETRIC
N.T.S.

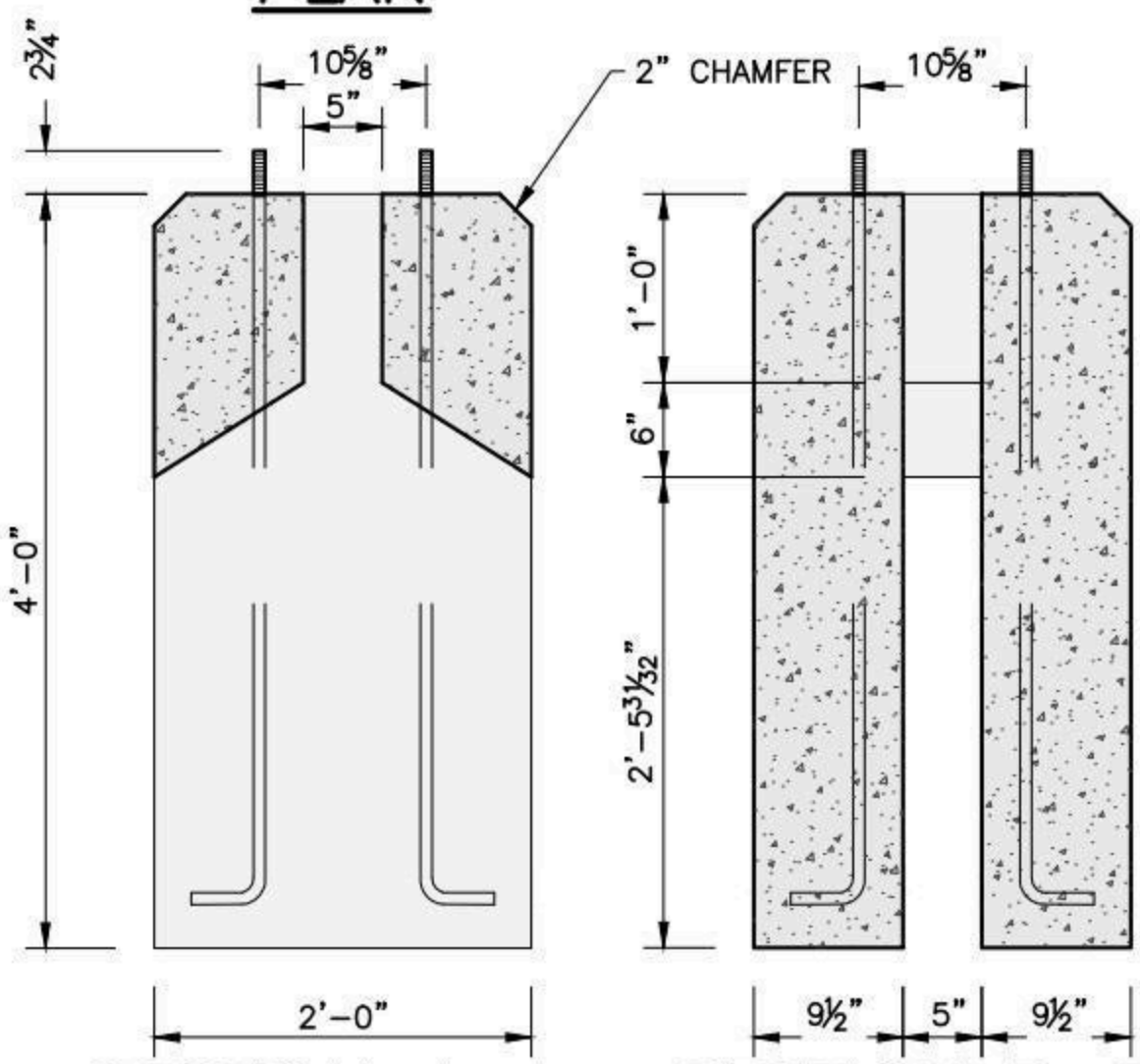

SECTION A–A SECTION B–B

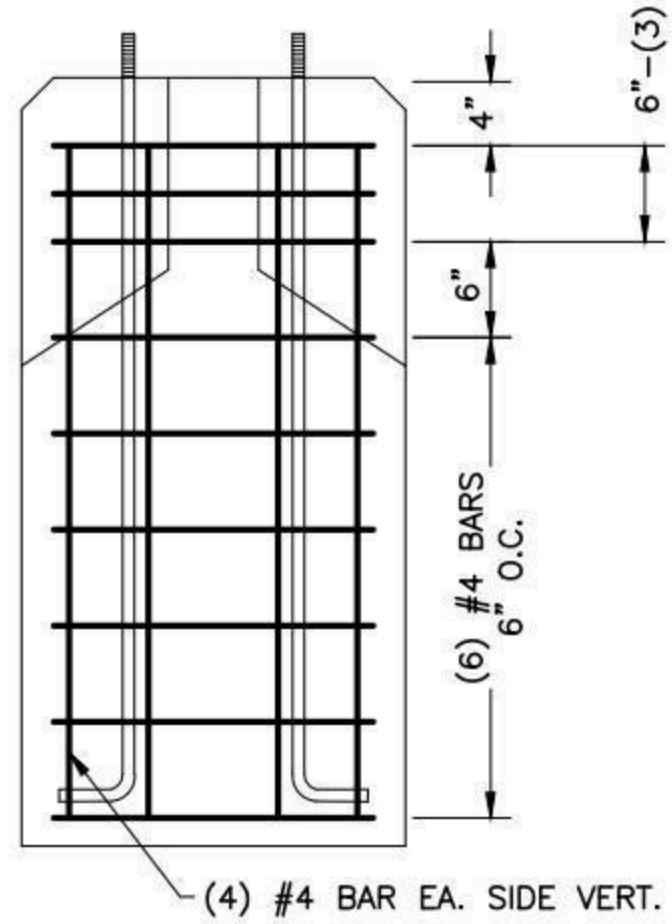

REINFORCEMENT LAYOUT

NOTES:

1. CONCRETE: 5,000 PSI MINIMUM AFTER 28 DAYS.
2. STEEL REINFORCEMENT CONFORMS TO ASTM A615, GRADE 60. MINIMUM STEEL COVER 1".
3. ANCHOR BOLTS: (4) ¾" DIAMETER X 48" X 3" L-SHAPED GALVANIZED STEEL, EACH WITH (2) HEAVY HEX HEAD NUTS AND (2) ROUND WASHERS. MINIMUM 12" THREAD LENGTH. ALL HARDWARE SHALL CONFORM TO ASTM A36, A563, AND F844, RESPECTIVELY. FABRICATED IN ACCORDANCE WITH ASTM F1554 AND HOT-DIP GALVANIZED PER A153.

SHEA PRODUCT ID: NGLPBMS6642	FILE NAME: NGMS6642LPB		
WEIGHT (LBS): 2100	DRAWN BY: L.P.	DATE: 12/21/2017	PAGE: IV.B.3

NPCA CERTIFIED PLANT

773 Salem Street–Wilmington, MA | 153 Cranberry Hwy–Rochester, MA | 87 Haverhill Road–Amesbury, MA | 160 Old Turnpike Rd–Nottingham, NH

Specifications subject to change without notice

SHEA CONCRETE PRODUCTS

New England's Premier Precaster
800-696-7432 (SHEA)
www.sheaconcrete.com

MAILING ADDRESS: 87 HAVERHILL RD AMESBURY, MA 01913

NATIONAL GRID LIGHT POLE BASE 24"SQ X 60"H SF10

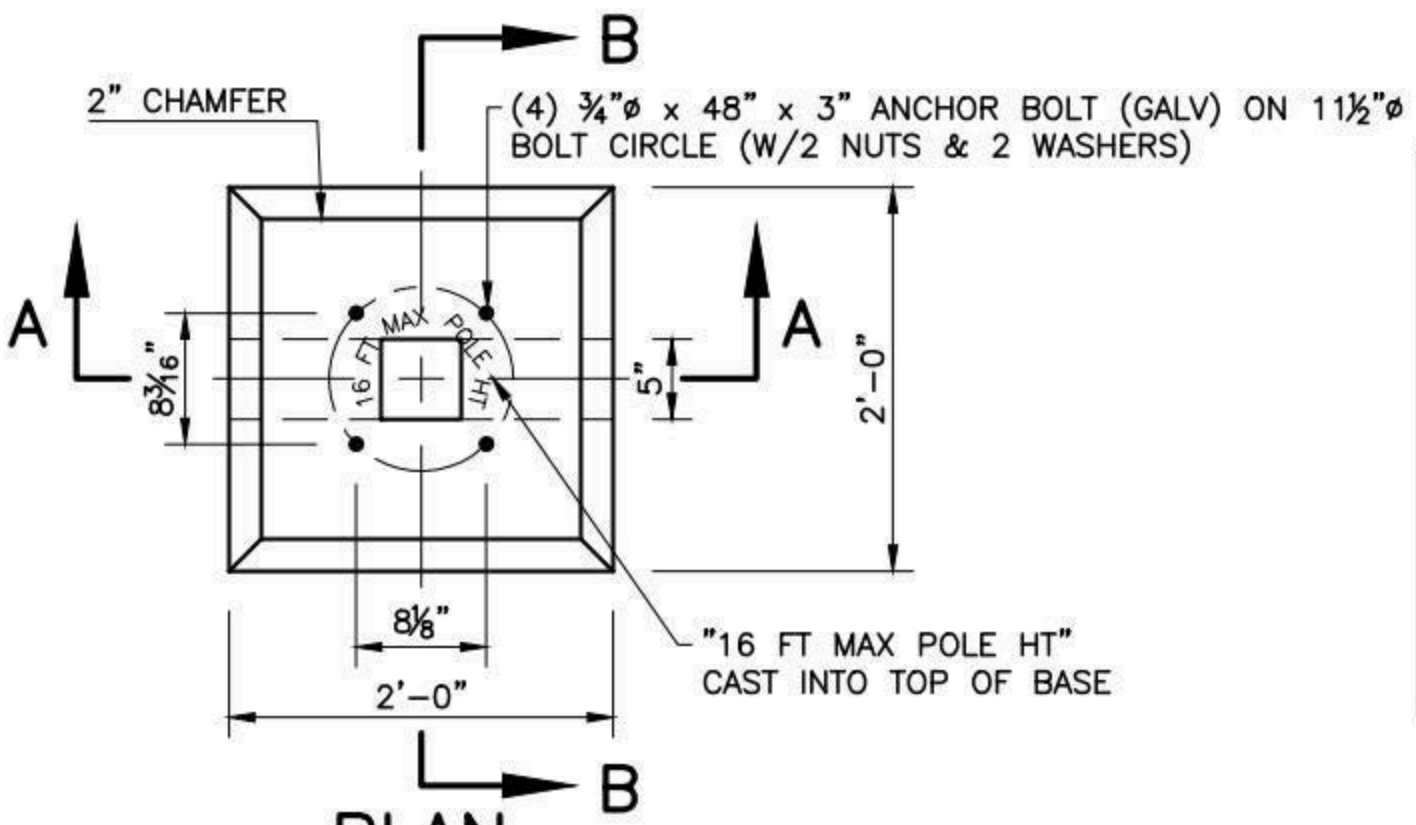

PLAN

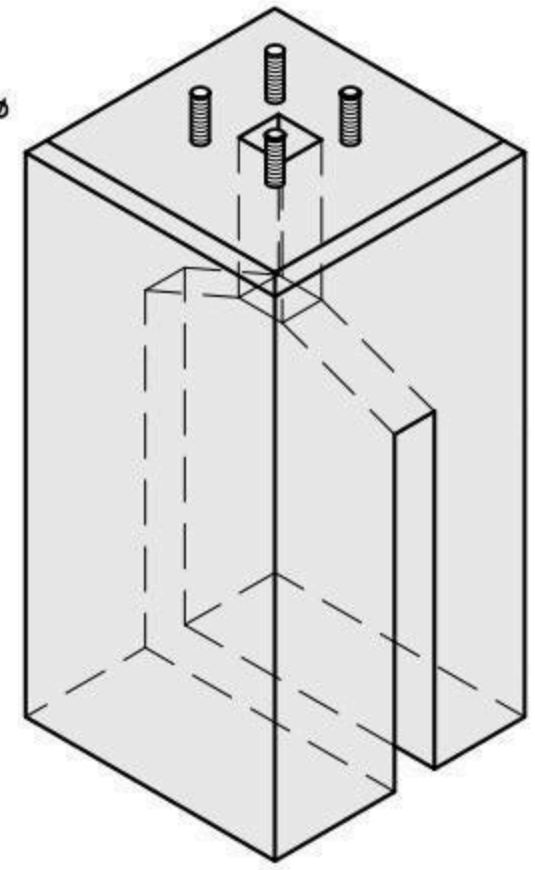

SCHEMATIC ISOMETRIC
N.T.S.

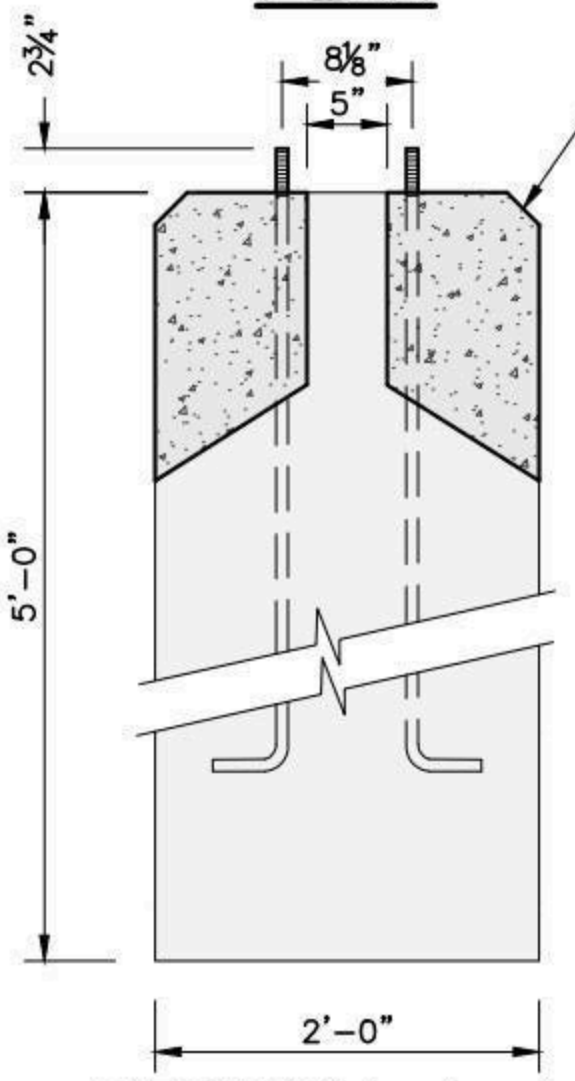

SECTION A–A

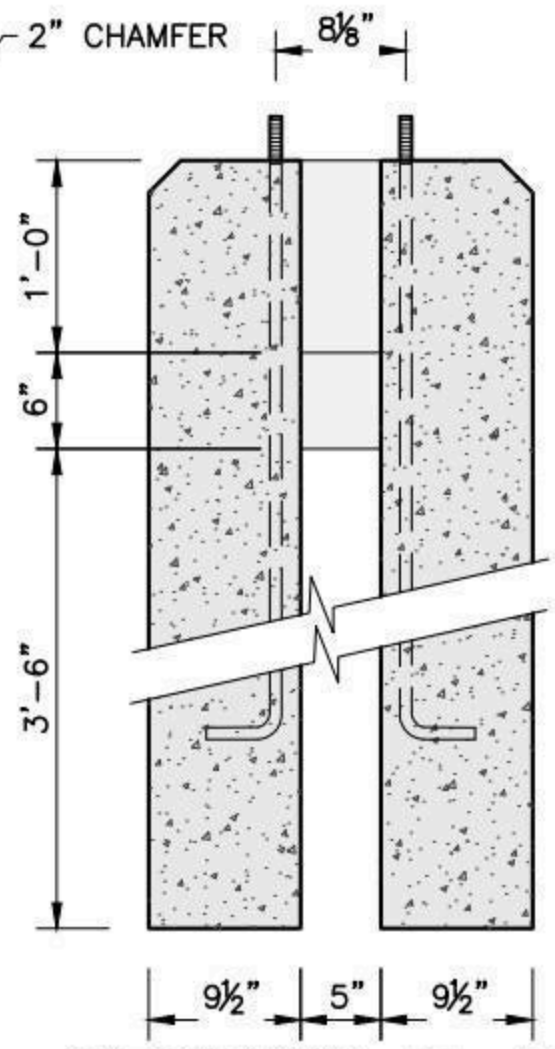

SECTION B–B

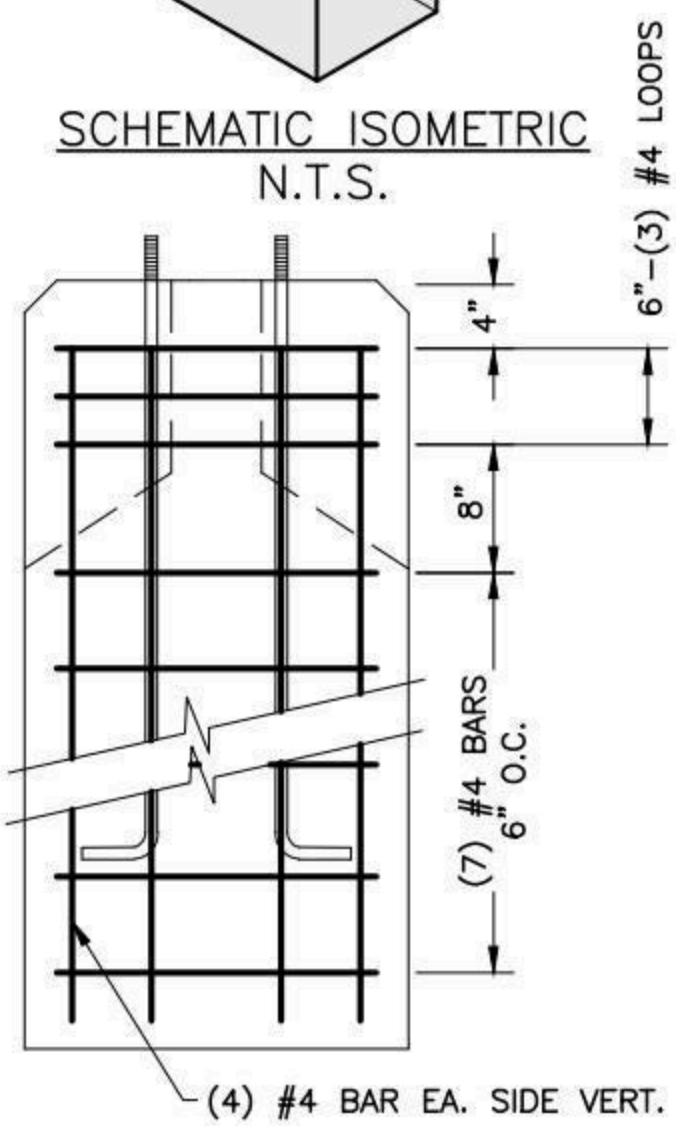

REINFORCEMENT LAYOUT

NOTES:

1. CONCRETE: 5,000 PSI MINIMUM AFTER 28 DAYS.
2. STEEL REINFORCEMENT CONFORMS TO ASTM A615, GRADE 60. MINIMUM STEEL COVER 1".
3. ANCHOR BOLTS: (4) ¾" DIAMETER X 48" X 3" L-SHAPED GALVANIZED STEEL, EACH WITH (2) HEAVY HEX HEAD NUTS AND (2) ROUND WASHERS. MINIMUM 12" THREAD LENGTH. ALL HARDWARE SHALL CONFORM TO ASTM A36, A563, AND F844, RESPECTIVELY. FABRICATED IN ACCORDANCE WITH ASTM F1554 AND HOT-DIP GALVANIZED PER A153.

SHEA PRODUCT ID: NGLPBMS6650	FILE NAME: NGMS6650LPB			NPCA CERTIFIED PLANT
WEIGHT (LBS): 2450	DRAWN BY: L.P.	DATE: 12/21/2017	PAGE: IV.B.4	

773 Salem Street–Wilmington, MA | 153 Cranberry Hwy–Rochester, MA | 87 Haverhill Road–Amesbury, MA | 160 Old Turnpike Rd–Nottingham, NH

Specifications subject to change without notice

SHEA CONCRETE PRODUCTS
New England's Premier Precaster
800-696-7432 (SHEA)
www.sheaconcrete.com
MAILING ADDRESS: 87 HAVERHILL RD AMESBURY, MA 01913

NATIONAL GRID LIGHT POLE BASE 24"SQ X 60"H SF11

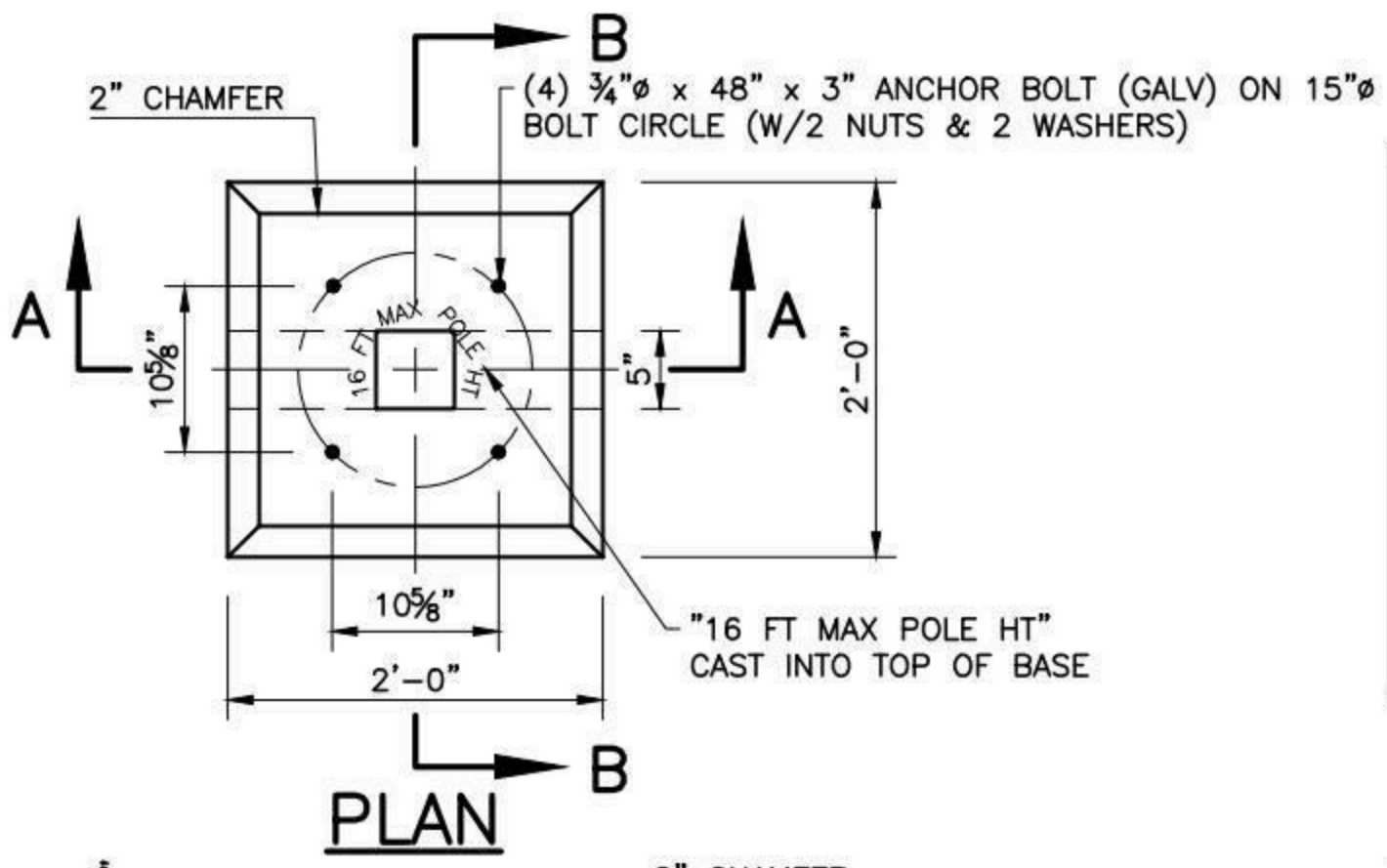

PLAN

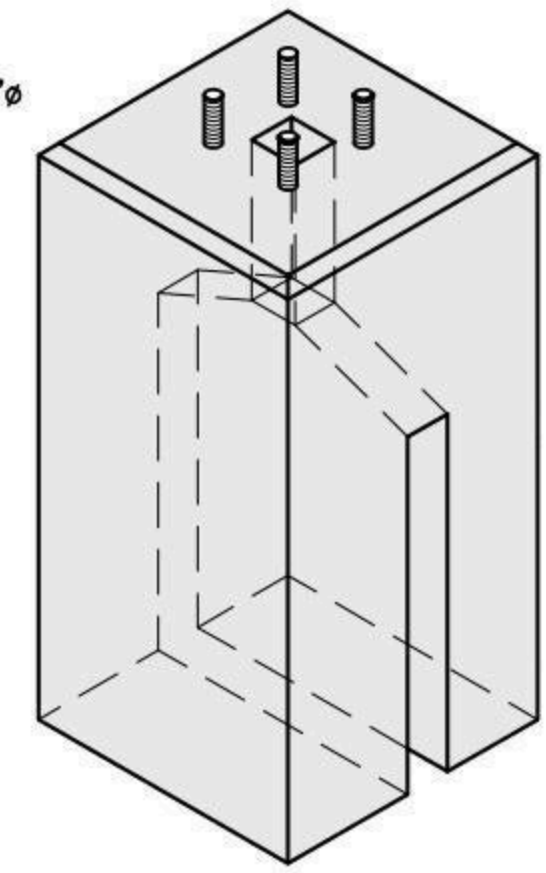

SCHEMATIC ISOMETRIC
N.T.S.

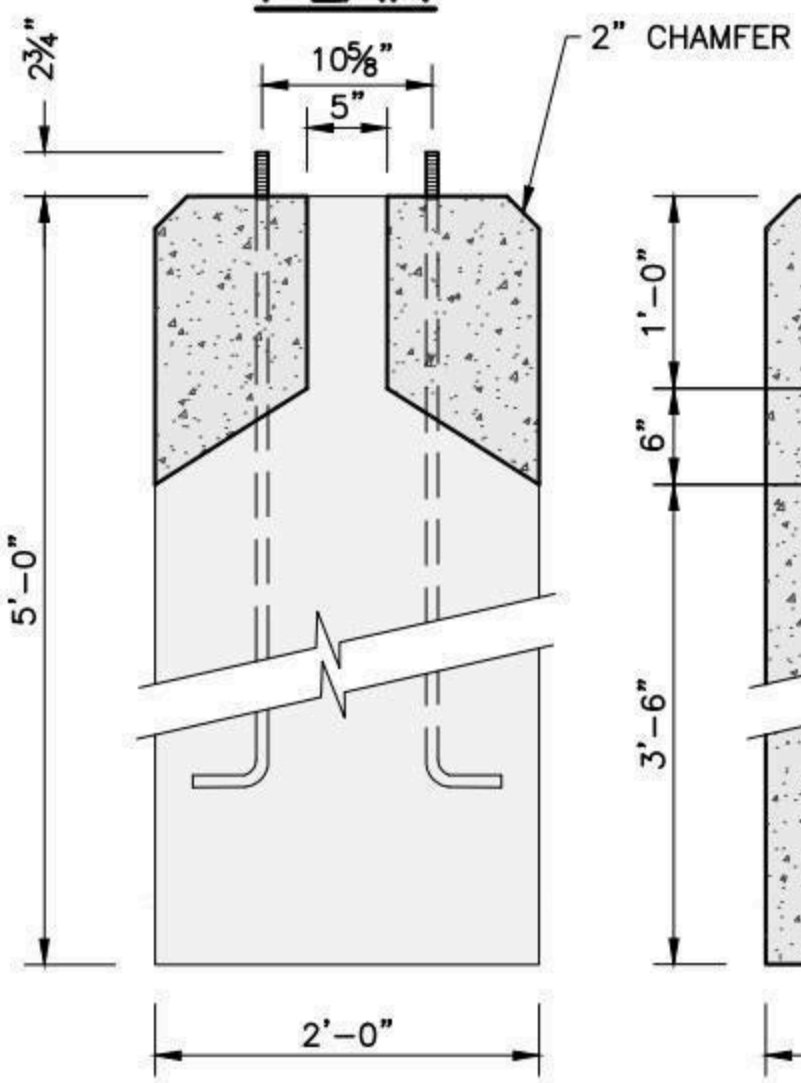

SECTION A–A

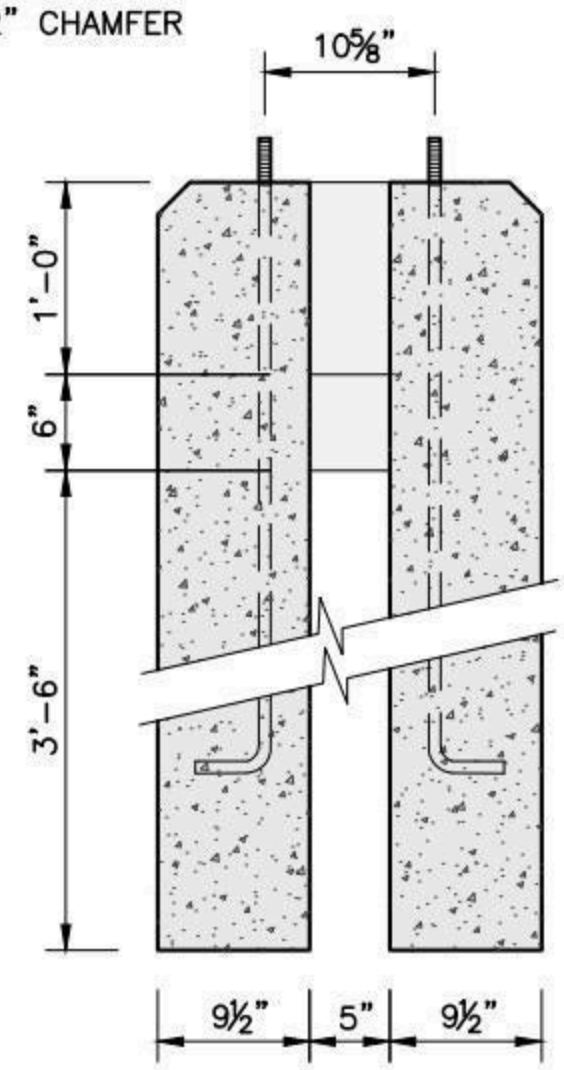

SECTION B–B

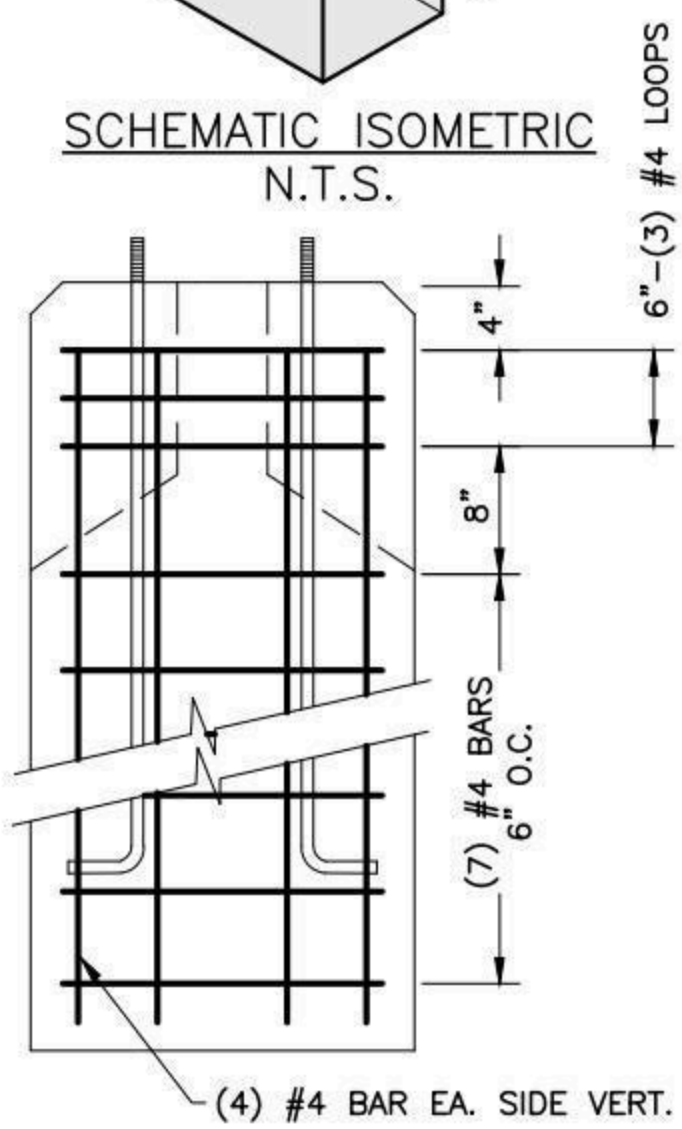

REINFORCEMENT LAYOUT

NOTES:

1. CONCRETE: 5,000 PSI MINIMUM AFTER 28 DAYS.
2. STEEL REINFORCEMENT CONFORMS TO ASTM A615, GRADE 60. MINIMUM STEEL COVER 1".
3. ANCHOR BOLTS: (4) ¾" DIAMETER X 48" X 3" L-SHAPED GALVANIZED STEEL, EACH WITH (2) HEAVY HEX HEAD NUTS AND (2) ROUND WASHERS. MINIMUM 12" THREAD LENGTH. ALL HARDWARE SHALL CONFORM TO ASTM A36, A563, AND F844, RESPECTIVELY. FABRICATED IN ACCORDANCE WITH ASTM F1554 AND HOT-DIP GALVANIZED PER A153.

SHEA PRODUCT ID: NGLPBMS6651	FILE NAME: NGMS6651LPB			
WEIGHT (LBS): 2450	DRAWN BY: L.P.	DATE: 12/21/2017	PAGE: IV.B.5	NPCA CERTIFIED PLANT

Specifications subject to change without notice

SHEA CONCRETE PRODUCTS
New England's Premier Precaster
800-696-7432 (SHEA)
www.sheaconcrete.com
MAILING ADDRESS: 87 HAVERHILL RD AMESBURY, MA 01913

NATIONAL GRID UTILITY MANHOLE
6' X 13' X 6'-6" UM22

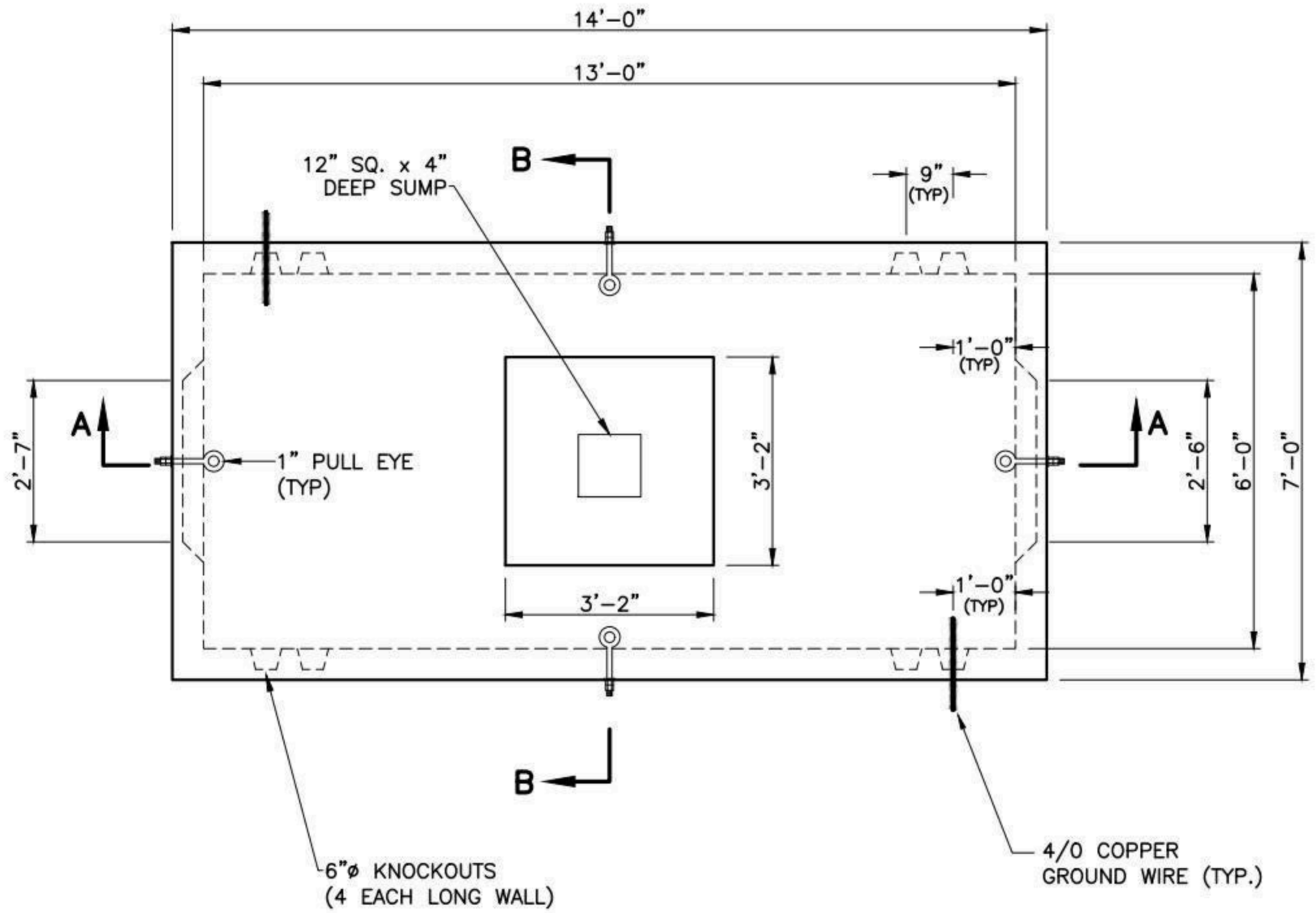

PLAN

NOTES:

1. CONCRETE: 5,000 PSI MINIMUM AFTER 28 DAYS.
2. DESIGN LOADING: AASHTO HS20-44, 0 TO 5 FEET COVER.
3. DESIGN SPECIFICATIONS – ACI 318 & AASHTO LOAD FACTOR DESIGN METHOD.
4. STEEL REINFORCEMENT CONFORMS TO ASTM A615, GRADE 60. MINIMUM COVER 1"
5. ALL TERMINATORS SHALL HAVE BELL ENDS FLUSH WITH THE INSIDE WALL.
6. CONSTRUCTION JOINT SHALL BE SEALED WITH 1"ø BUTYL RUBBER OR APPROVED EQUAL.

SHEA PRODUCT ID: NG-613-66	FILE NAME: NGRID UM22		
WEIGHT (LBS): 34500	DRAWN BY: L.P.	DATE: 12/22/2017	PAGE: IV.C.1-1

NPCA CERTIFIED PLANT

773 Salem Street-Wilmington, MA | 153 Cranberry Hwy-Rochester, MA | 87 Haverhill Road-Amesbury, MA | 160 Old Turnpike Rd-Nottingham, NH

Specifications subject to change without notice

SHEA CONCRETE PRODUCTS
New England's Premier Precaster
800-696-7432 (SHEA)
www.sheaconcrete.com
MAILING ADDRESS: 87 HAVERHILL RD AMESBURY, MA 01913

NATIONAL GRID UTILITY MANHOLE
6' X 13' X 6'-6" UM22

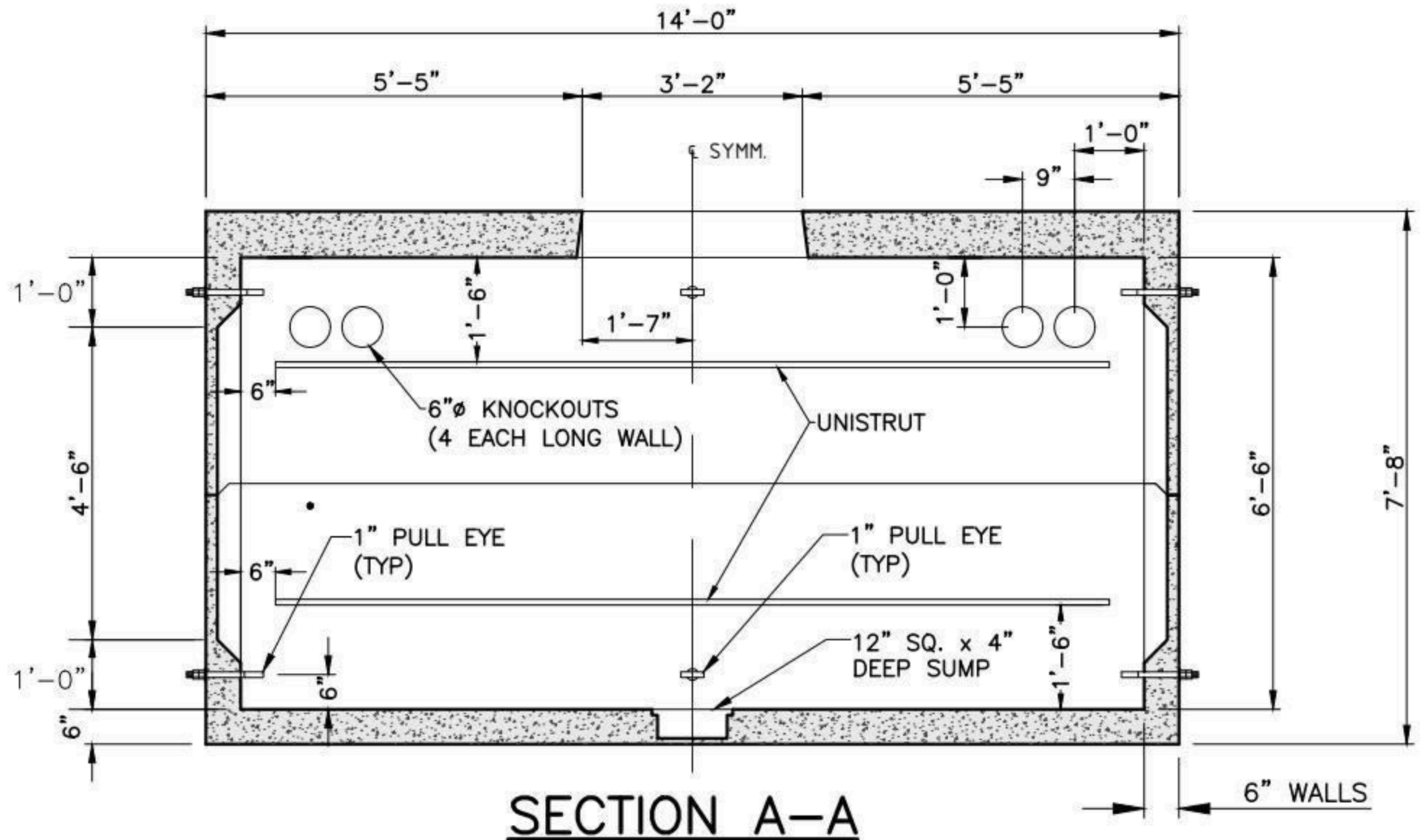

SECTION A-A

OPPOSITE WALLS ARE MIRROR IMAGES.

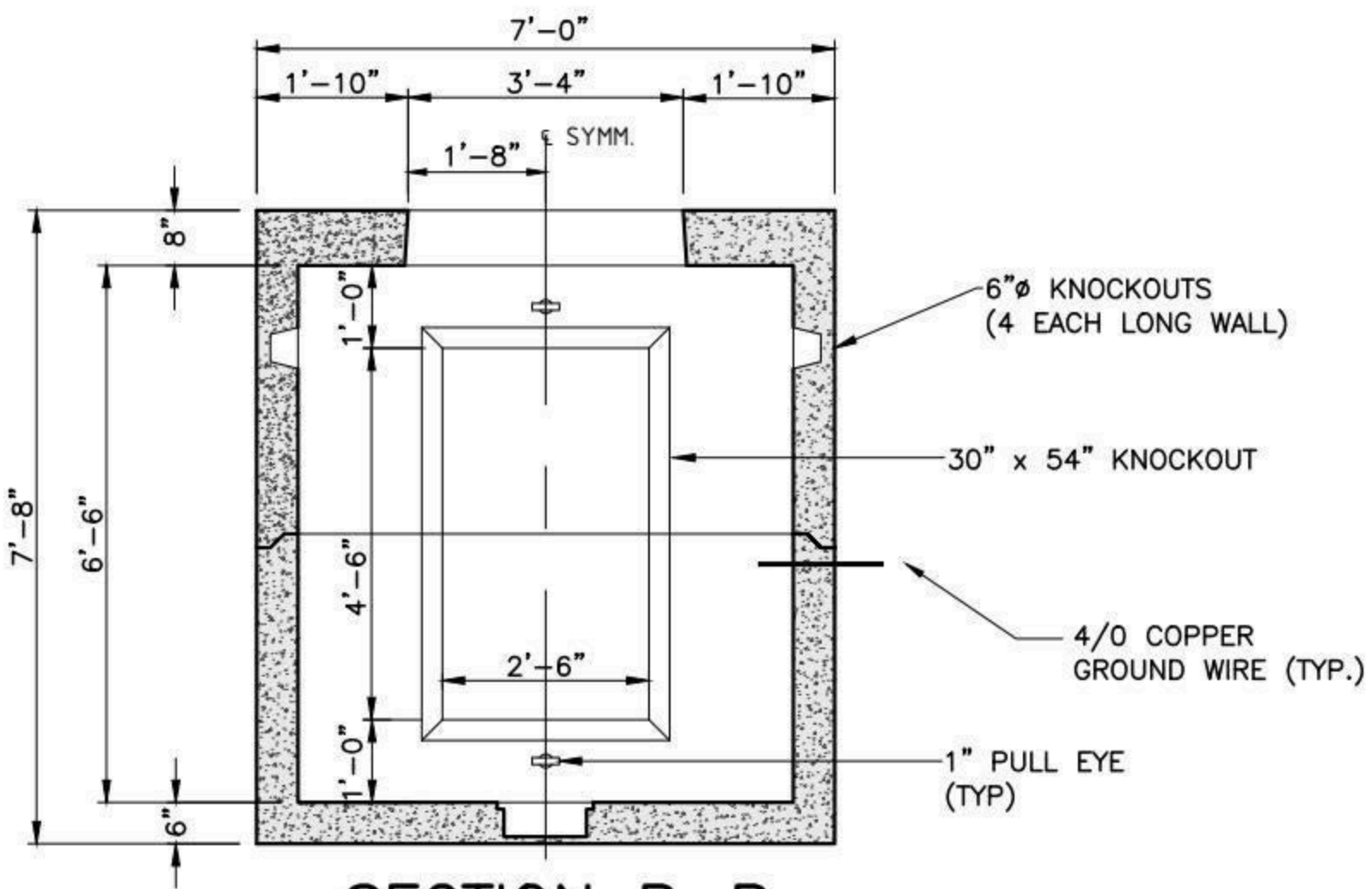

SECTION B-B

OPPOSITE WALLS ARE MIRROR IMAGES.

SHEA PRODUCT ID: NG-613-66	FILE NAME: NGRID UM22		
WEIGHT (LBS): 34500	DRAWN BY: L.P.	DATE: 12/22/2017	PAGE: IV.C.1-2

NPCA CERTIFIED PLANT

773 Salem Street-Wilmington, MA | 153 Cranberry Hwy-Rochester, MA | 87 Haverhill Road-Amesbury, MA | 160 Old Turnpike Rd-Nottingham, NH

Specifications subject to change without notice

SHEA CONCRETE PRODUCTS
New England's Premier Precaster
800-696-7432 (SHEA)
www.sheaconcrete.com
MAILING ADDRESS: 87 HAVERHILL RD AMESBURY, MA 01913

NATIONAL GRID 3-WAY MANHOLE 10' X 13' X 6'-6" UM23

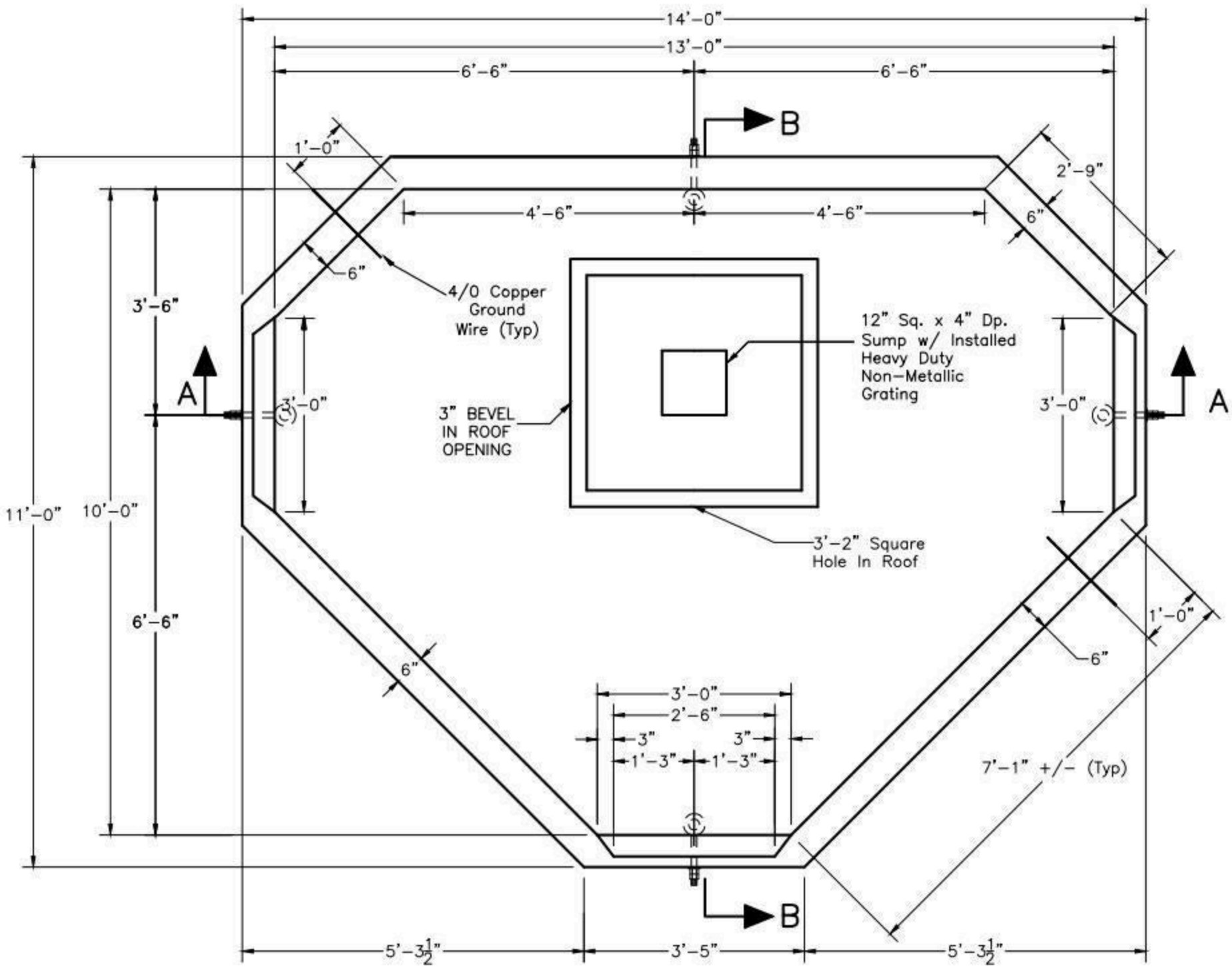

PLAN VIEW

NOTES:

1. CONCRETE: 5,000 PSI MINIMUM AFTER 28 DAYS.
2. DESIGN LOADING: AASHTO HS20-44, 0 TO 5 FEET COVER.
3. DESIGN SPECIFICATIONS – ACI 318 & AASHTO LOAD FACTOR DESIGN METHOD.
4. STEEL REINFORCEMENT CONFORMS TO ASTM A615, GRADE 60. MINIMUM COVER 1"
5. ALL TERMINATORS SHALL HAVE BELL ENDS FLUSH WITH THE INSIDE WALL.
6. CONSTRUCTION JOINT SHALL BE SEALED WITH 1"ø BUTYL RUBBER OR APPROVED EQUAL.

SHEA PRODUCT ID: NGUM23	FILE NAME: NGRID UM23			NPCA CERTIFIED PLANT
WEIGHT (LBS): 37000	DRAWN BY: L.P.	DATE: 12/27/2017	PAGE: IV.C.2-1	

Specifications subject to change without notice

SHEA CONCRETE PRODUCTS
New England's Premier Precaster
800-696-7432 (SHEA)
www.sheaconcrete.com
MAILING ADDRESS: 87 HAVERHILL RD AMESBURY, MA 01913

NATIONAL GRID 3-WAY MANHOLE 10' X 13' X 6'-6" UM23

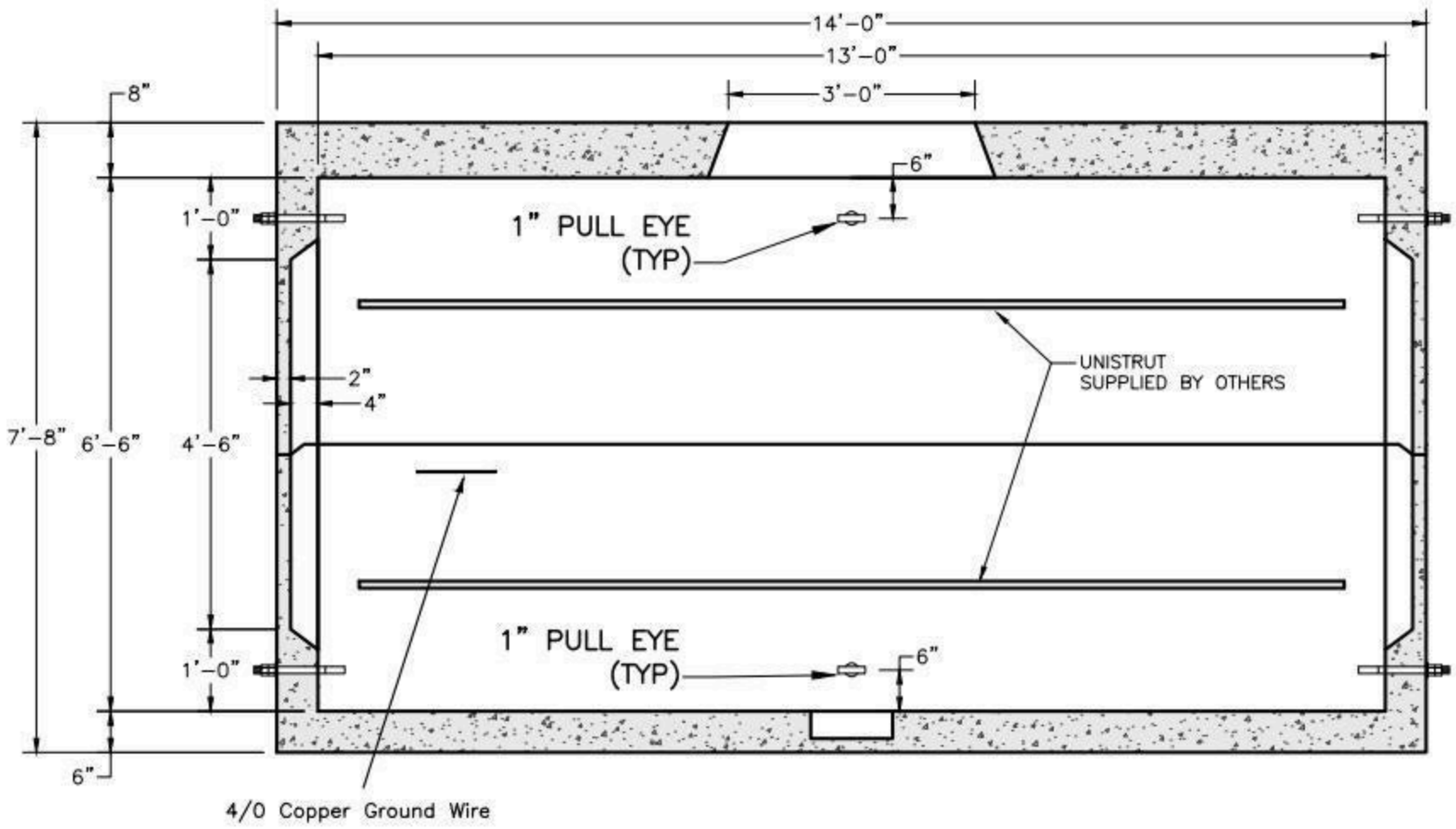

SECTION AA

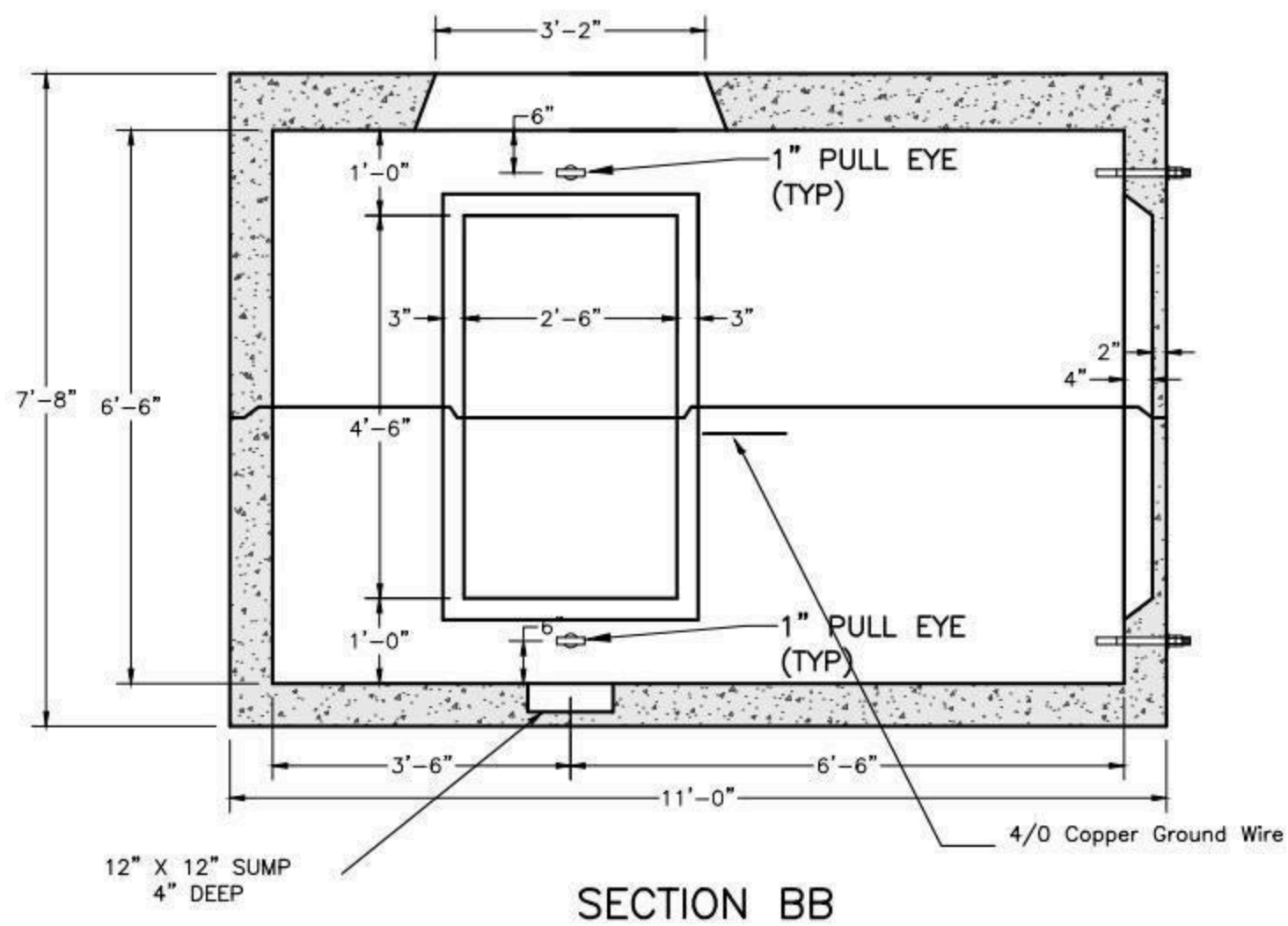

SECTION BB

SHEA PRODUCT ID:	NGUM23	FILE NAME:	NGRID UM23		
WEIGHT (LBS):	37000	DRAWN BY: L.P.	DATE: 12/27/2017	PAGE: IV.C.2-2	

NPCA CERTIFIED PLANT

773 Salem Street-Wilmington, MA | 153 Cranberry Hwy-Rochester, MA | 87 Haverhill Road-Amesbury, MA | 160 Old Turnpike Rd-Nottingham, NH

Specifications subject to change without notice

SHEA CONCRETE PRODUCTS
New England's Premier Precaster
800-696-7432 (SHEA)
www.sheaconcrete.com
MAILING ADDRESS: 87 HAVERHILL RD AMESBURY, MA 01913

NATIONAL GRID UTILITY MANHOLE
5' X 9' X 7' UM39

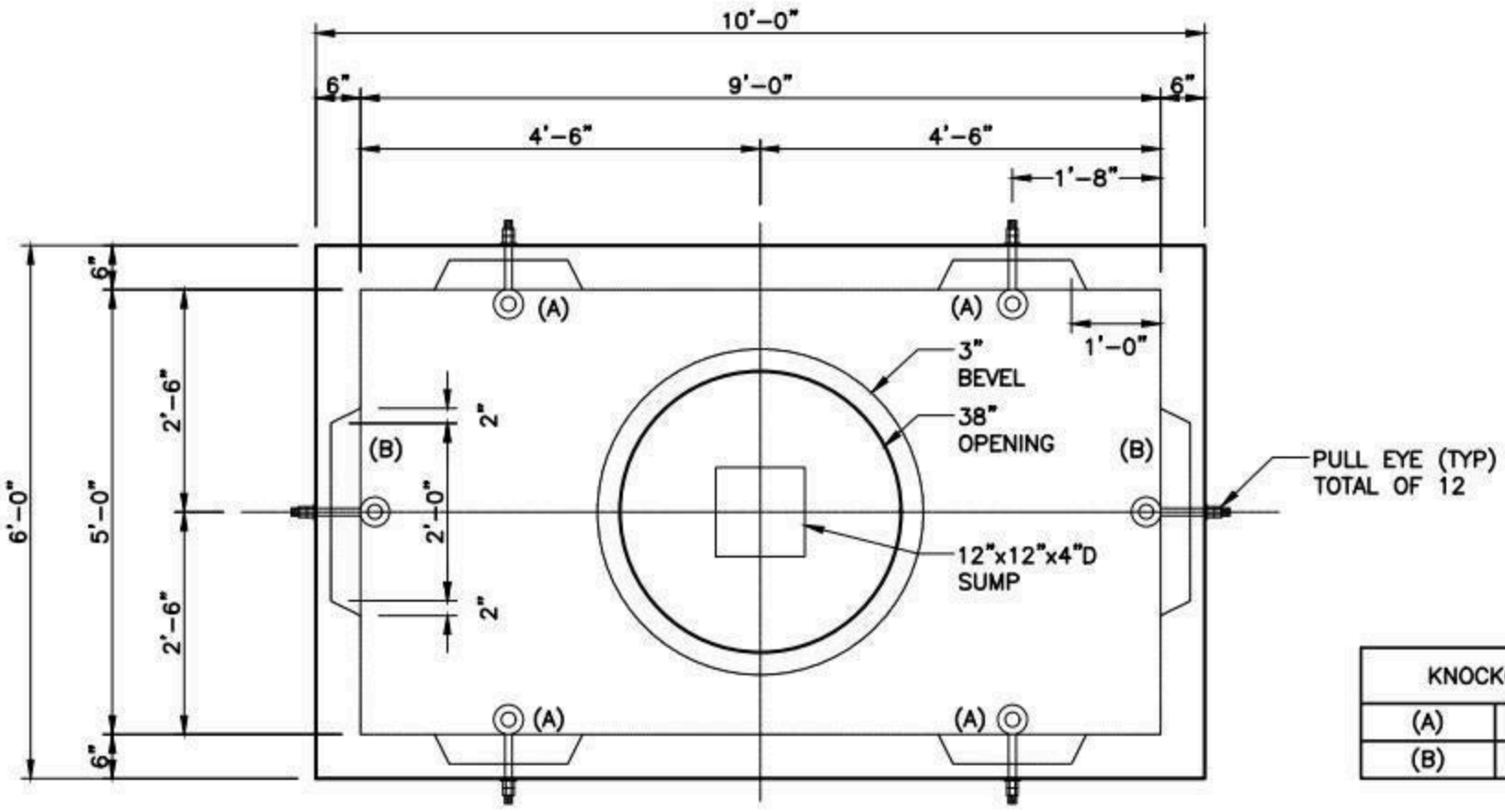

KNOCKOUTS	
(A)	16"x38"
(B)	24"x38"

PLAN

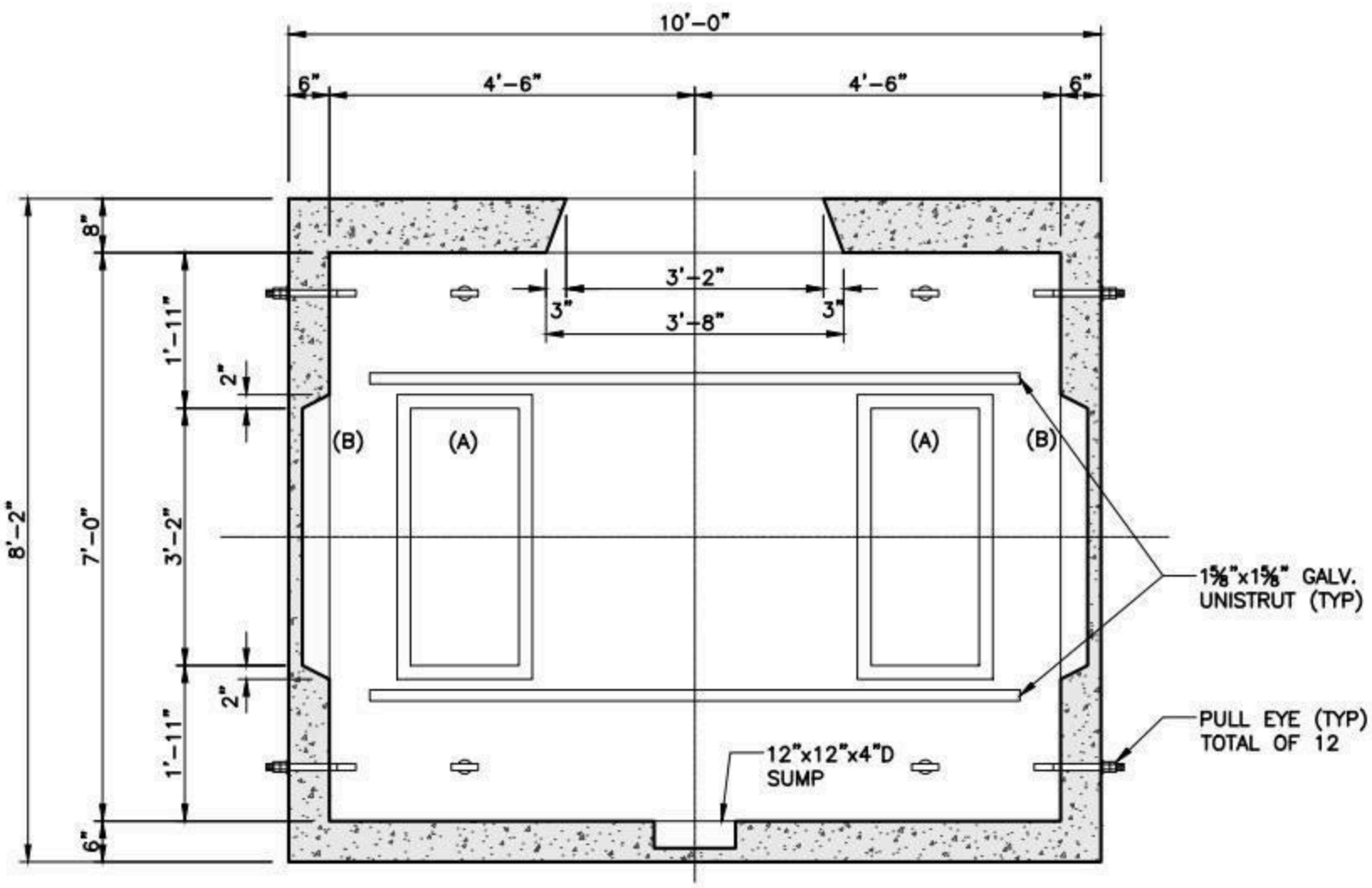

ELEVATION

NOTES:

1. CONCRETE: 5,000 PSI MINIMUM AFTER 28 DAYS.
2. DESIGN LOADING: AASHTO HS20-44, 0 TO 5 FEET COVER.
3. DESIGN SPECIFICATIONS – ACI 318 & AASHTO LOAD FACTOR DESIGN METHOD.
4. STEEL REINFORCEMENT CONFORMS TO ASTM A615, GRADE 60. MINIMUM COVER 1"
5. ALL TERMINATORS SHALL HAVE BELL ENDS FLUSH WITH THE INSIDE WALL.
6. CONSTRUCTION JOINT SHALL BE SEALED WITH 1"ø BUTYL RUBBER OR APPROVED EQUAL.

SHEA PRODUCT ID: NG-59-7	FILE NAME: NGRID UM39			NPCA CERTIFIED PLANT
WEIGHT (LBS): 21000	DRAWN BY: L.P.	DATE: 12/27/2017	PAGE: IV.C.3	

Specifications subject to change without notice

SHEA CONCRETE PRODUCTS
New England's Premier Precaster
800-696-7432 (SHEA)
www.sheaconcrete.com
MAILING ADDRESS: 87 HAVERHILL RD AMESBURY, MA 01913

NATIONAL GRID SWITCHGEAR MANHOLE
6' X 13' X 6'-6" UM20

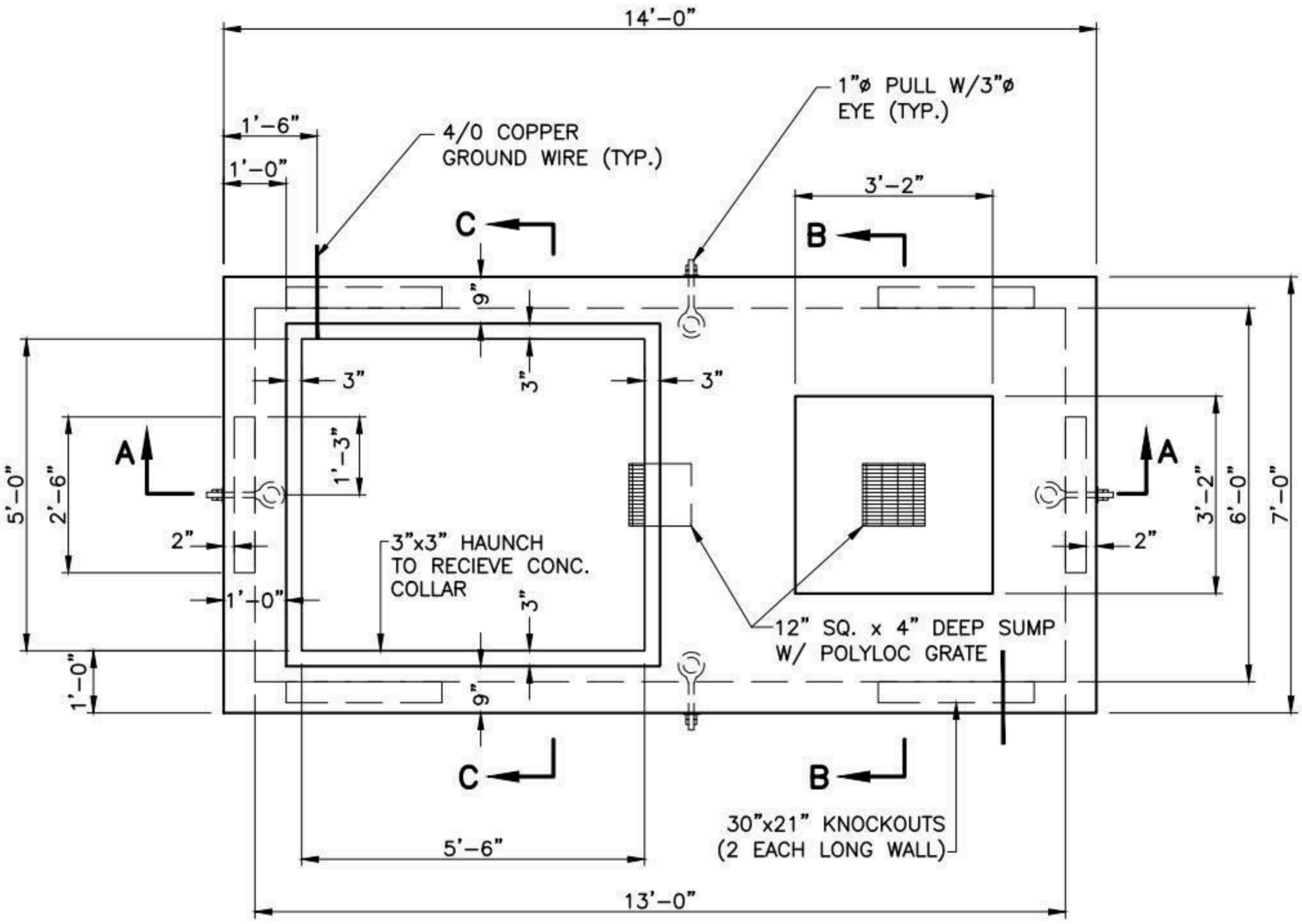

PLAN

NOTES:

1. CONCRETE: 5,000 PSI MINIMUM AFTER 28 DAYS.
2. DESIGN LOADING: AASHTO HS20-44, 0 TO 5 FEET COVER.
3. DESIGN SPECIFICATIONS - ACI 318 & AASHTO LOAD FACTOR DESIGN METHOD.
4. STEEL REINFORCEMENT CONFORMS TO ASTM A615, GRADE 60. MINIMUM COVER 1"
5. ALL TERMINATORS SHALL HAVE BELL ENDS FLUSH WITH THE INSIDE WALL.
6. CONSTRUCTION JOINT SHALL BE SEALED WITH 1"ø BUTYL RUBBER OR APPROVED EQUAL.

SHEA PRODUCT ID: NG-613-66SG	FILE NAME: NGSWITCHGEARMH			NPCA CERTIFIED PLANT
WEIGHT (LBS): 31840	DRAWN BY: L.P.	DATE: 1/2/2017	PAGE: IV.D.1-1	

Specifications subject to change without notice

SHEA CONCRETE PRODUCTS
New England's Premier Precaster
800-696-7432 (SHEA)
www.sheaconcrete.com
MAILING ADDRESS: 87 HAVERHILL RD AMESBURY, MA 01913

NATIONAL GRID SWITCHGEAR MANHOLE
6' X 13' X 6'-6" UM20

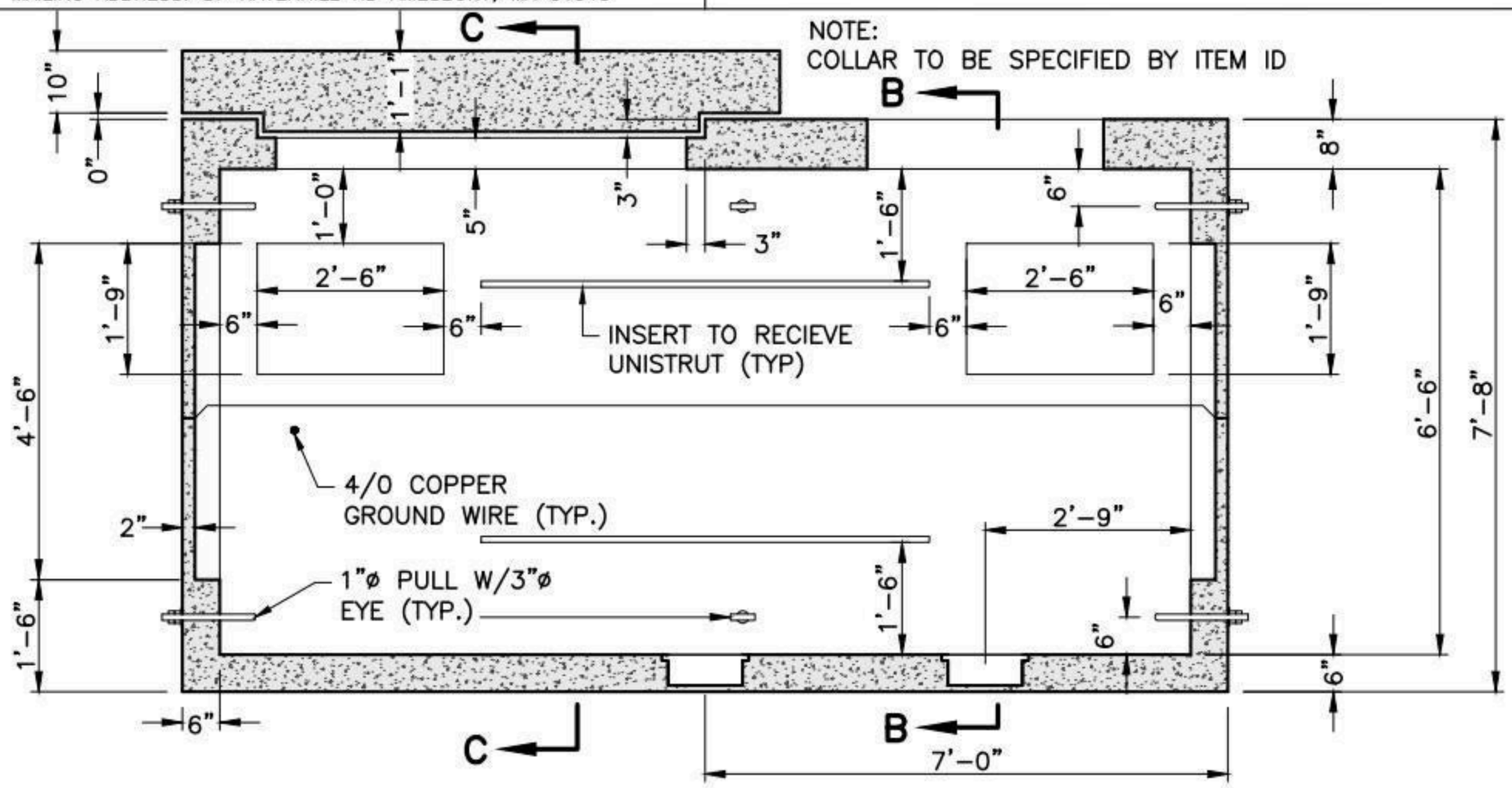

SECTION A-A

OPPOSITE WALLS ARE MIRROR IMAGES.

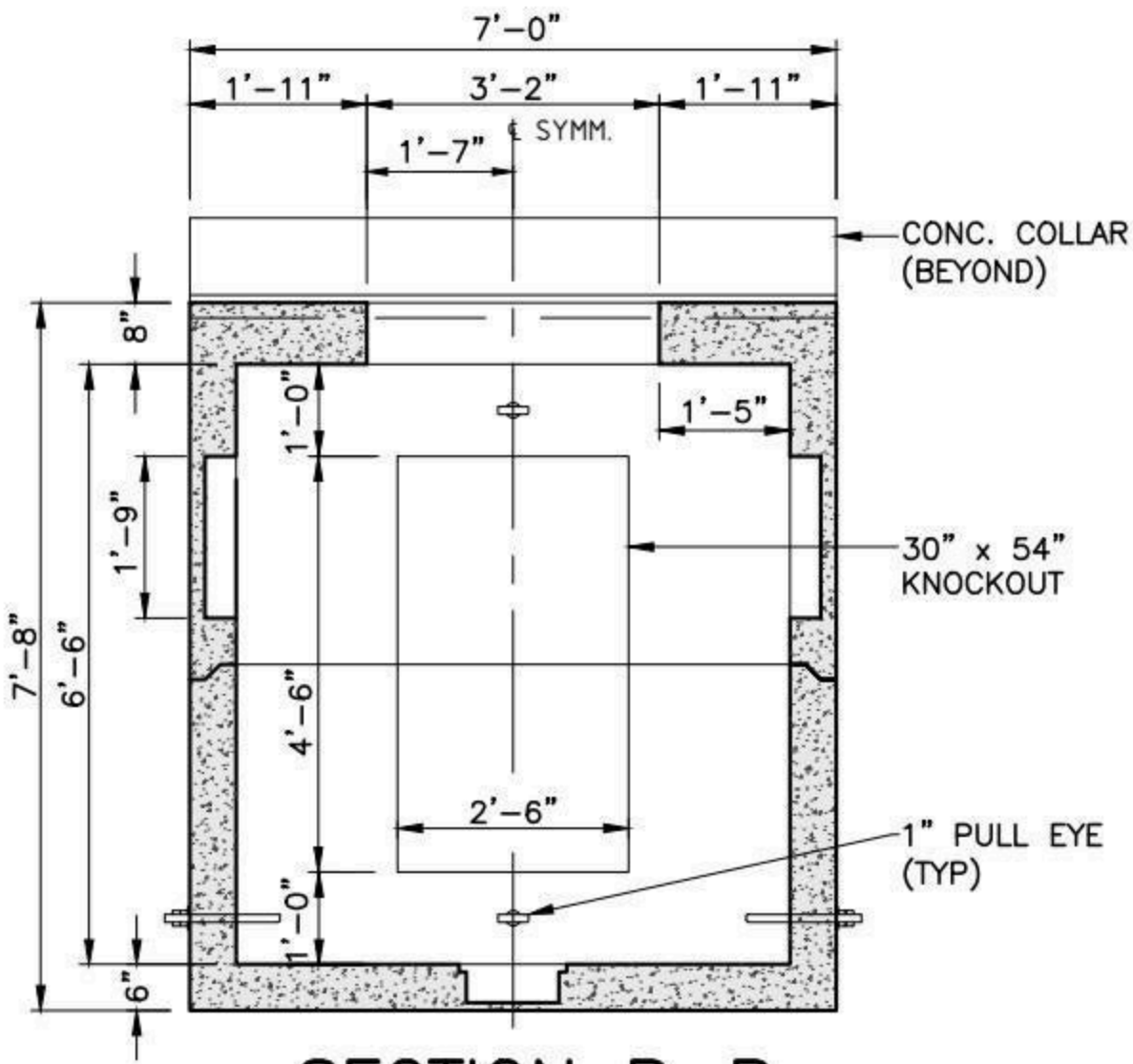

SECTION B-B

OPPOSITE WALLS ARE MIRROR IMAGES.

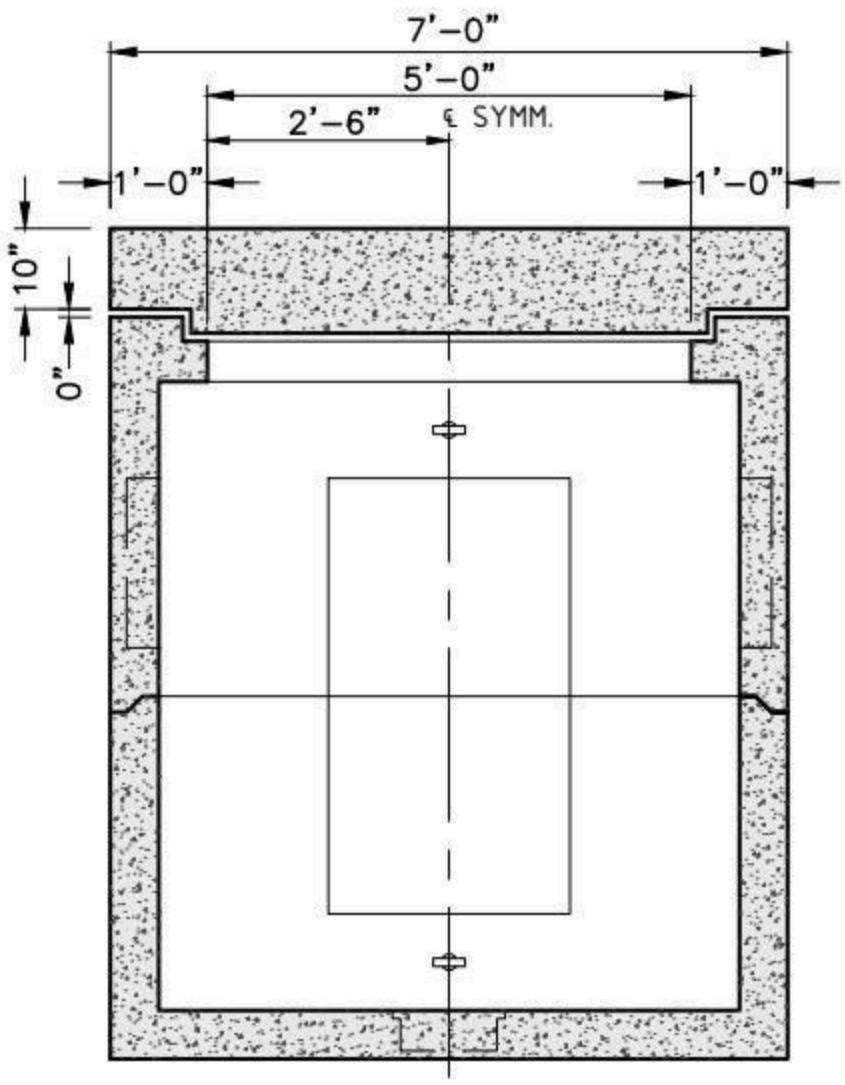

SECTION C-C

SEE SECTION B-B FOR DIMENSIONAL INFORMATION NOT SHOWN

SHEA PRODUCT ID: NG-613-66SG	FILE NAME: NGSWITCHGEARMH		
WEIGHT (LBS): 31840	DRAWN BY: L.P.	DATE: 1/2/2017	PAGE: IV.D.1-2

NPCA CERTIFIED PLANT

773 Salem Street-Wilmington, MA | 153 Cranberry Hwy-Rochester, MA | 87 Haverhill Road-Amesbury, MA | 160 Old Turnpike Rd-Nottingham, NH

Specifications subject to change without notice

SHEA CONCRETE PRODUCTS
New England's Premier Precaster
800-696-7432 (SHEA)
www.sheaconcrete.com
MAILING ADDRESS: 87 HAVERHILL RD AMESBURY, MA 01913

NATIONAL GRID SWITCHGEAR MANHOLE
7' X 14' X 6'-6" UM21

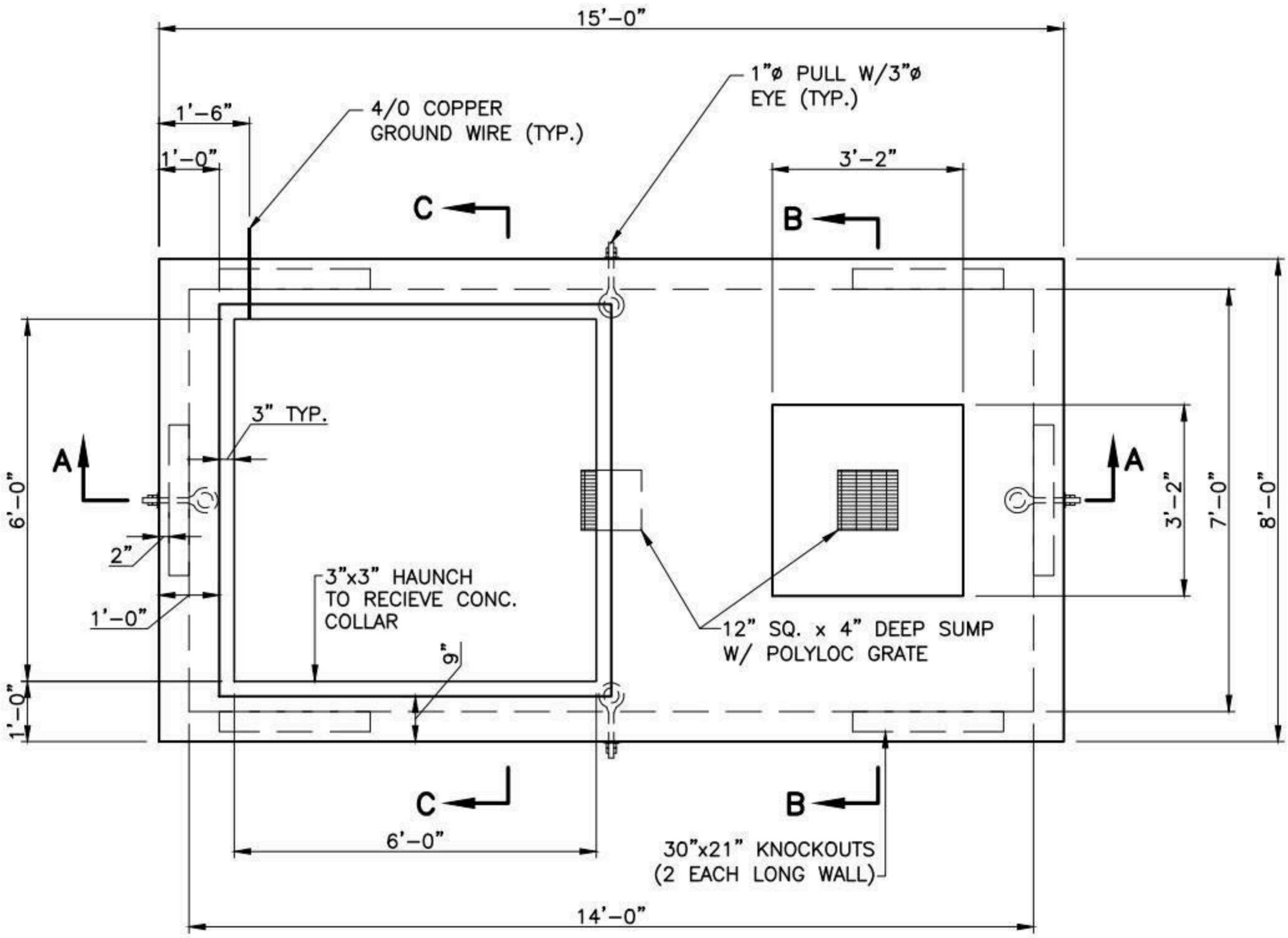

PLAN

NOTES:

1. CONCRETE: 5,000 PSI MINIMUM AFTER 28 DAYS.
2. DESIGN LOADING: AASHTO HS20-44, 0 TO 5 FEET COVER.
3. DESIGN SPECIFICATIONS – ACI 318 & AASHTO LOAD FACTOR DESIGN METHOD.
4. STEEL REINFORCEMENT CONFORMS TO ASTM A615, GRADE 60. MINIMUM COVER 1"
5. ALL TERMINATORS SHALL HAVE BELL ENDS FLUSH WITH THE INSIDE WALL.
6. CONSTRUCTION JOINT SHALL BE SEALED WITH 1"ø BUTYL RUBBER OR APPROVED EQUAL.

SHEA PRODUCT ID: NG-714-66SG	FILE NAME: NG_LARGESWITCHGEAR_MH		
WEIGHT (LBS): 36585	DRAWN BY: L.P.	DATE: 1/2/2017	PAGE: IV.D.2-1

NPCA CERTIFIED PLANT

Specifications subject to change without notice

SHEA CONCRETE PRODUCTS
New England's Premier Precaster
800-696-7432 (SHEA)
www.sheaconcrete.com
MAILING ADDRESS: 87 HAVERHILL RD AMESBURY, MA 01913

NATIONAL GRID SWITCHGEAR MANHOLE
7' X 14' X 6'-6" UM21

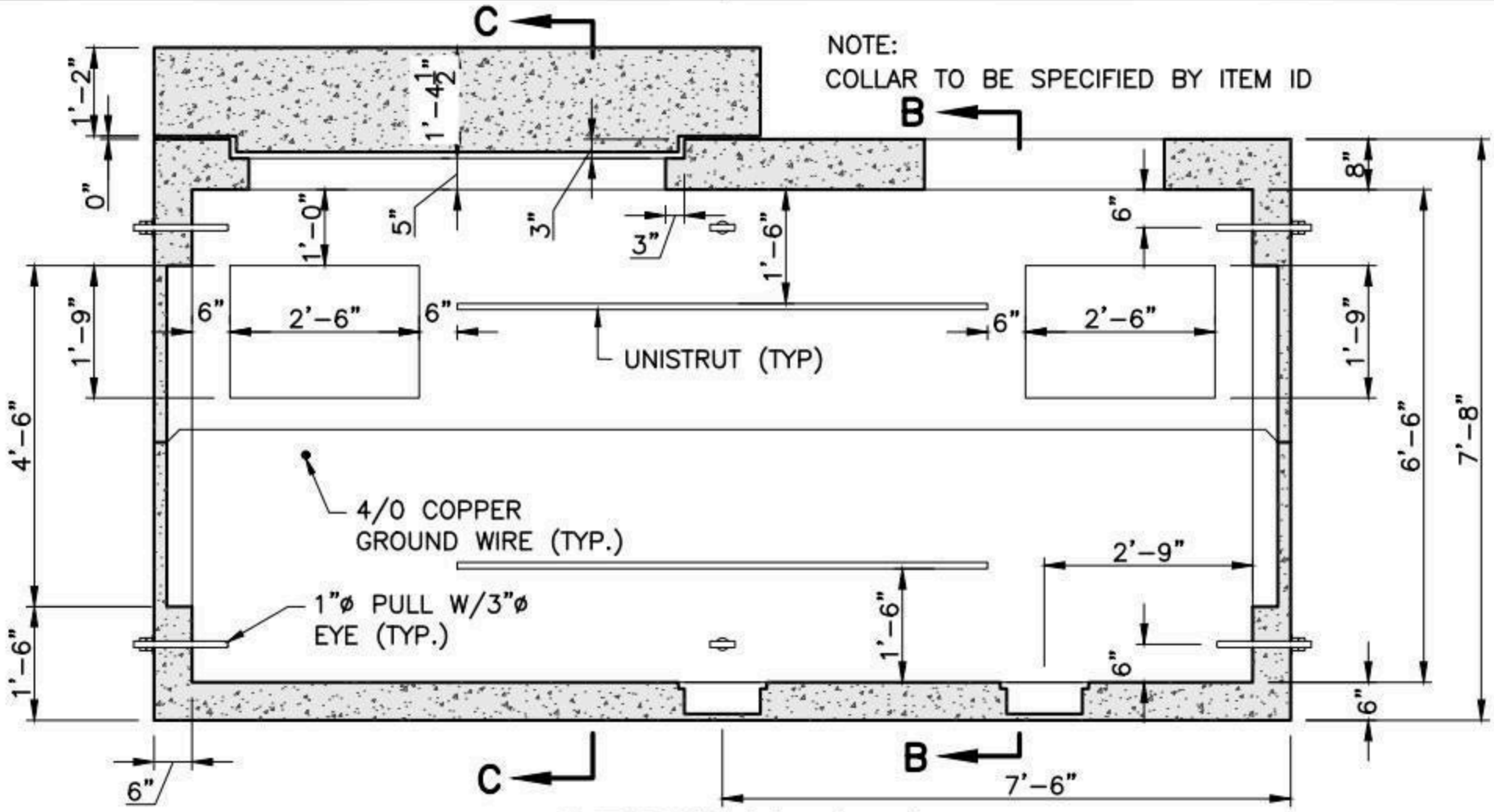

SECTION A-A
OPPOSITE WALLS ARE MIRROR IMAGES.

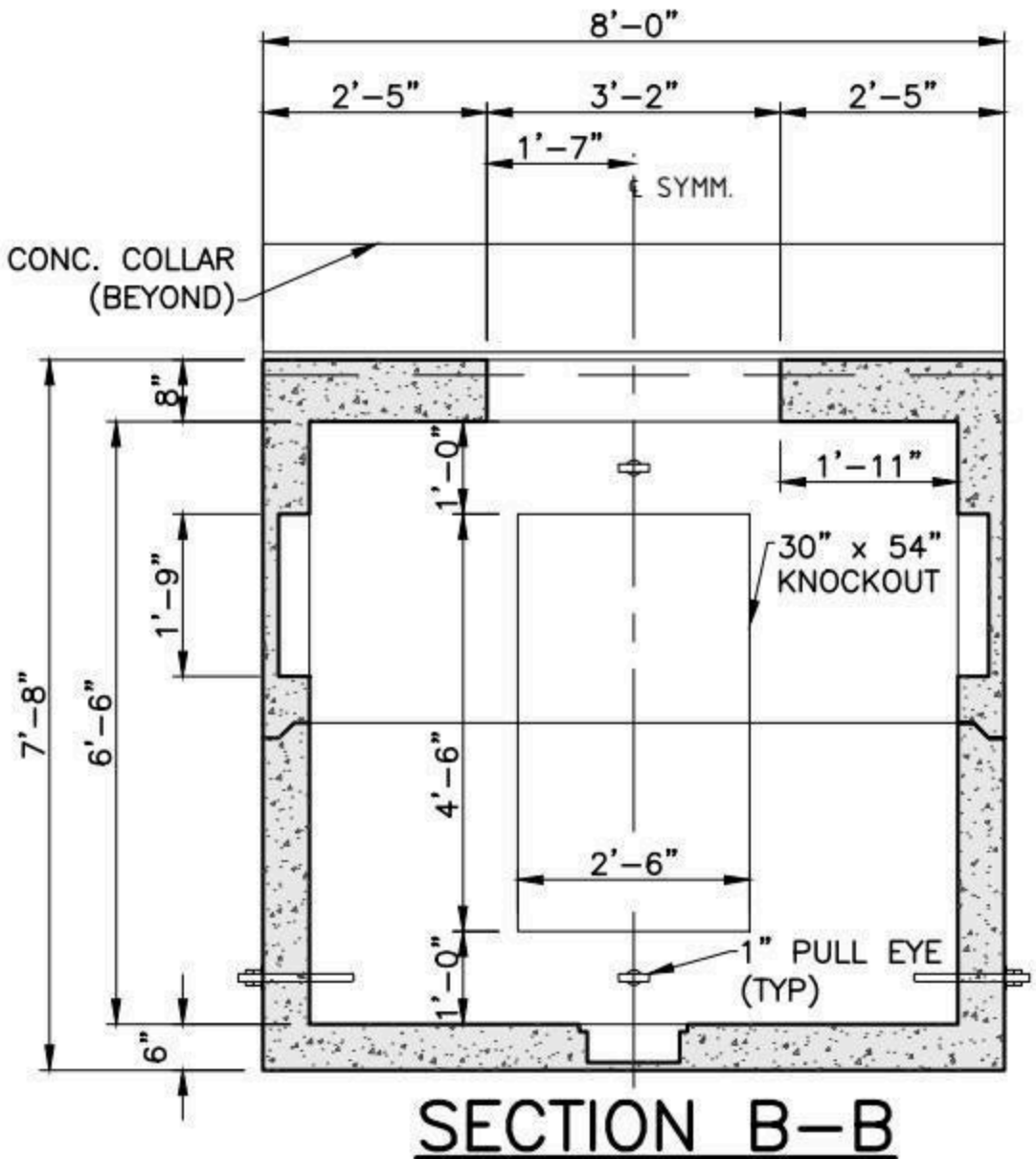

SECTION B-B
OPPOSITE WALLS ARE MIRROR IMAGES.

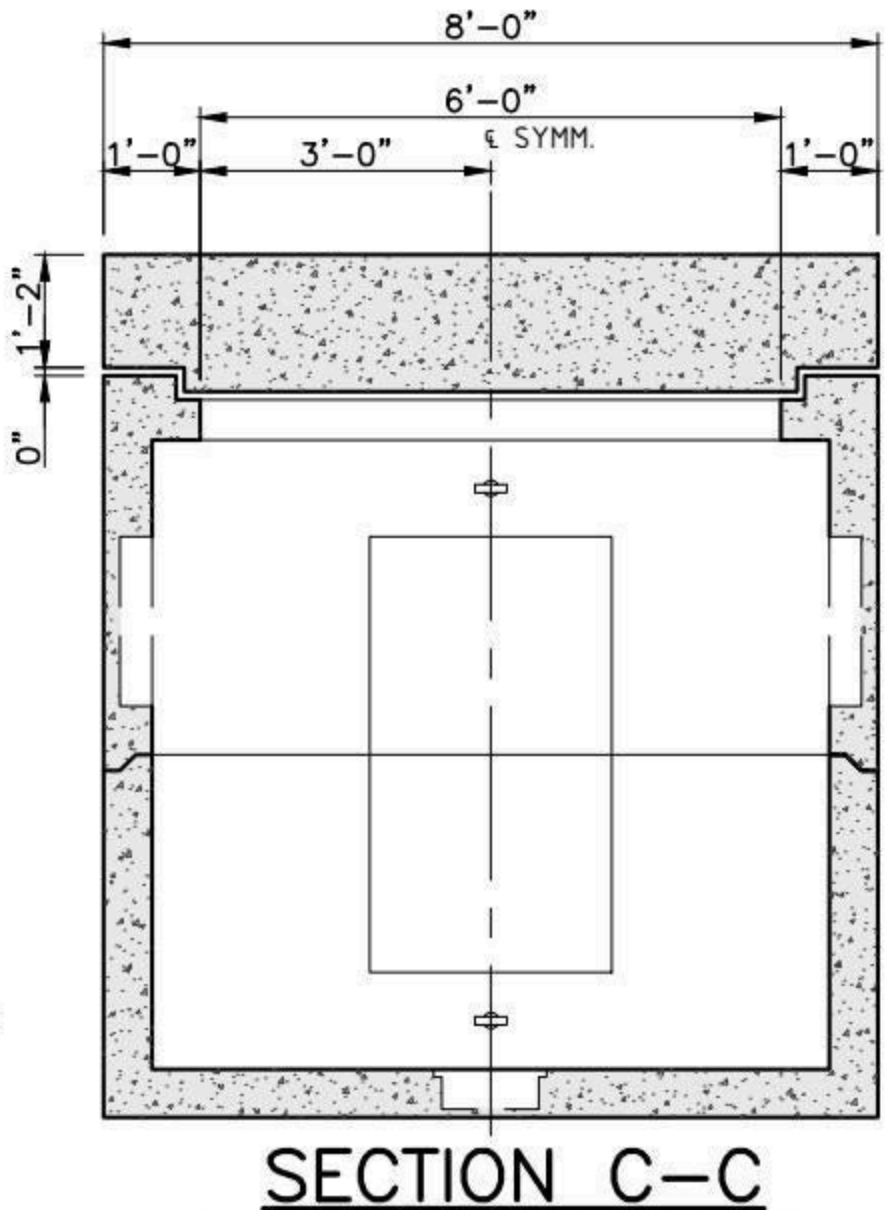

SECTION C-C
SEE SECTION B-B FOR DIMENSIONAL INFORMATION NOT SHOWN

SHEA PRODUCT ID: NG-714-66SG	FILE NAME: NG_LARGESWITCHGEAR_MH		
WEIGHT (LBS): 36585	DRAWN BY: L.P.	DATE: 1/2/2017	PAGE: IV.D.2-2

NPCA CERTIFIED PLANT

Specifications subject to change without notice

SHEA CONCRETE PRODUCTS
New England's Premier Precaster
800-696-7432 (SHEA)
www.sheaconcrete.com
MAILING ADDRESS: 87 HAVERHILL RD AMESBURY, MA 01913

NATIONAL GRID SWITCHGEAR COLLAR 'A'

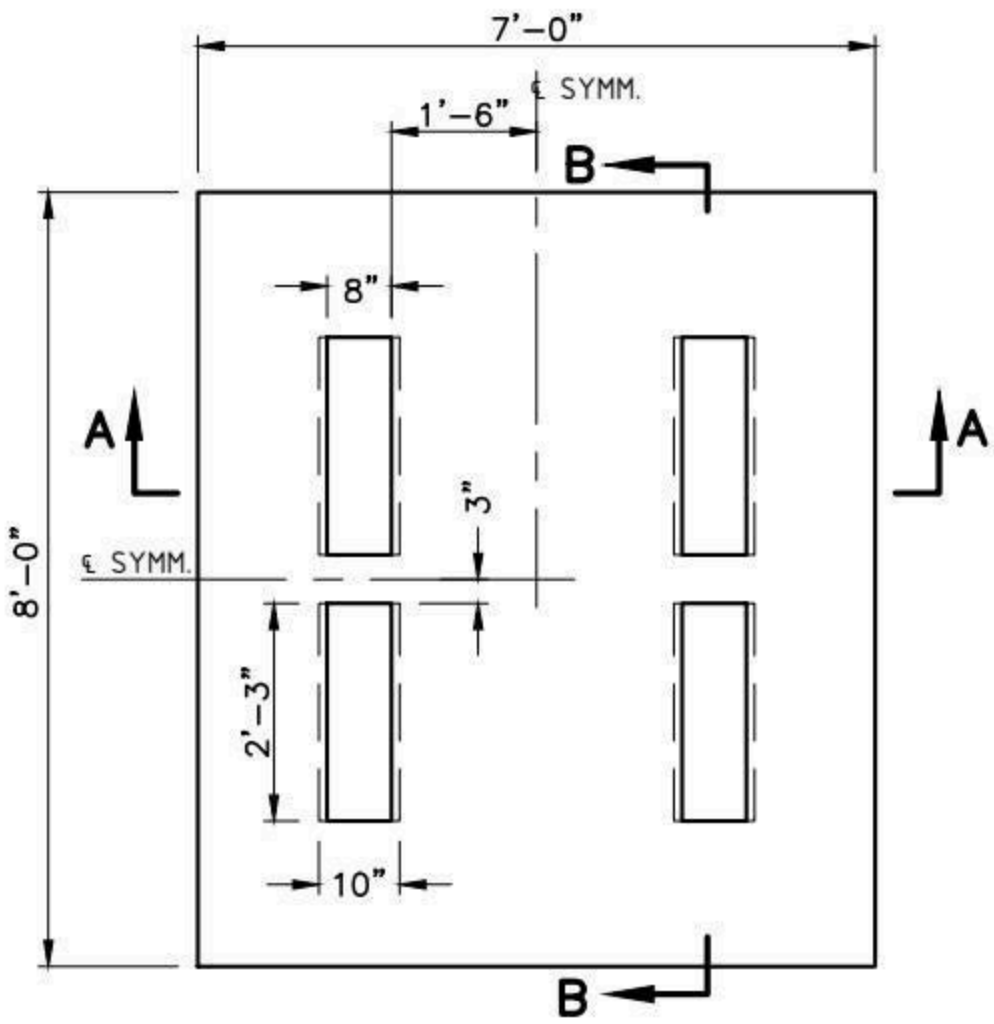

COLLAR "A" 15kV SG COLLAR PLAN

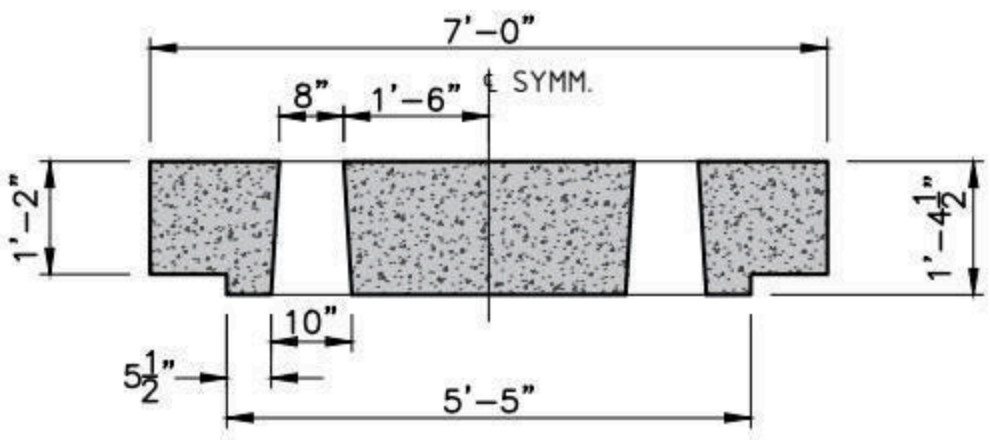

SECTION A-A

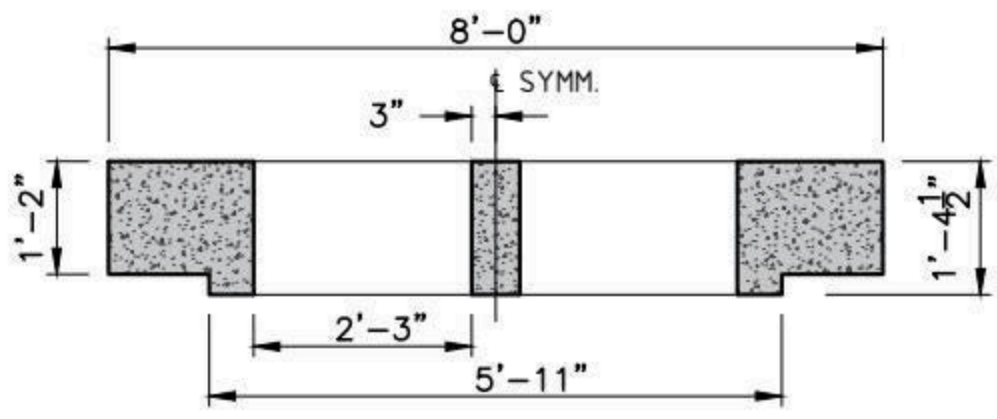

SECTION B-B

NOTES:

1. CONCRETE: 5,000 PSI MINIMUM AFTER 28 DAYS.
2. DESIGN LOADING: AASHTO HS20-44, TOP AT SURFACE.
3. DESIGN SPECIFICATIONS – ACI 318 & AASHTO LOAD FACTOR DESIGN METHOD.
4. STEEL REINFORCEMENT CONFORMS TO ASTM A615, GRADE 60. MINIMUM COVER 1"
5. CONSTRUCTION JOINT SHALL BE SEALED WITH 1"ø BUTYL RUBBER OR APPROVED EQUAL.

SHEA PRODUCT ID: NGSGCA	FILE NAME: NGSWG COLLAR A			NPCA CERTIFIED PLANT
WEIGHT (LBS): 9610	DRAWN BY: L.P.	DATE: 1/3/2017	PAGE: IV.D.3	

Specifications subject to change without notice

SHEA CONCRETE PRODUCTS
New England's Premier Precaster
800-696-7432 (SHEA)
www.sheaconcrete.com
MAILING ADDRESS: 87 HAVERHILL RD AMESBURY, MA 01913

NATIONAL GRID SWITCHGEAR COLLAR 'B'

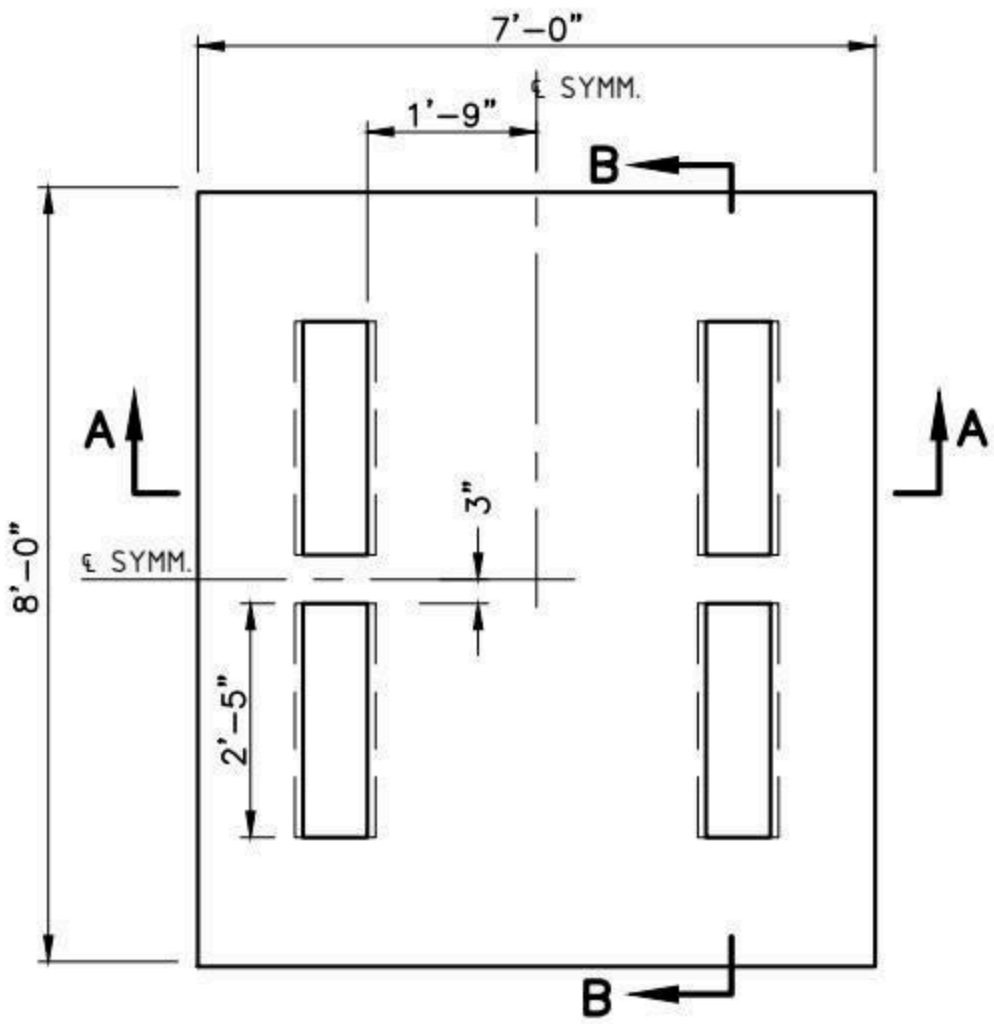

COLLAR "B"
25/35kV SG COLLAR
PLAN

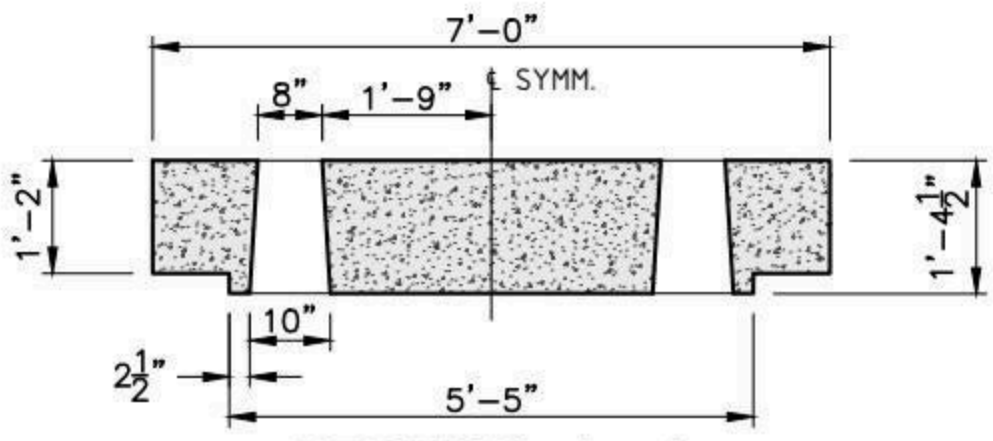

SECTION A–A

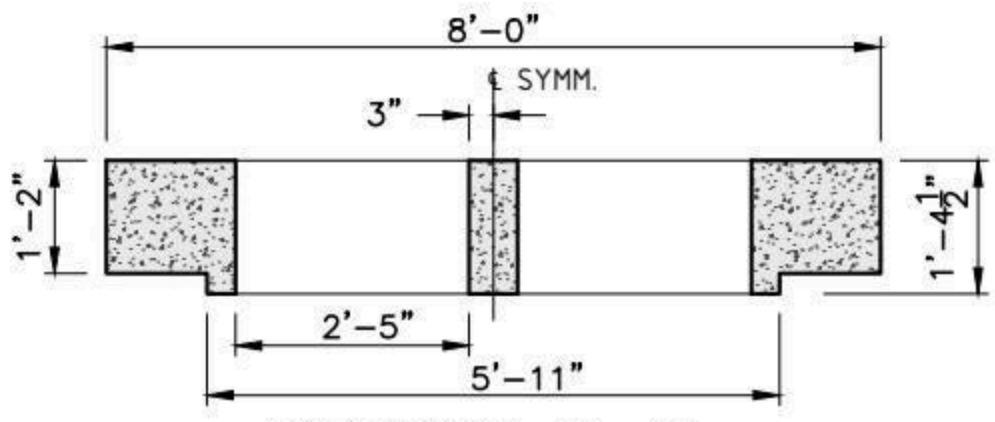

SECTION B–B

NOTES:

1. CONCRETE: 5,000 PSI MINIMUM AFTER 28 DAYS.
2. DESIGN LOADING: AASHTO HS20-44, 0 TO 5 FEET COVER.
3. DESIGN SPECIFICATIONS – ACI 318 & AASHTO LOAD FACTOR DESIGN METHOD.
4. STEEL REINFORCEMENT CONFORMS TO ASTM A615, GRADE 60. MINIMUM COVER 1"
5. CONSTRUCTION JOINT SHALL BE SEALED WITH 1"ø BUTYL RUBBER OR APPROVED EQUAL.

SHEA PRODUCT ID: NGSGCB	FILE NAME: NGSWG COLLAR B			NPCA CERTIFIED PLANT
WEIGHT (LBS): 9610	DRAWN BY: L.P.	DATE: 1/3/2017	PAGE: IV.D.4	

Specifications subject to change without notice

SHEA CONCRETE PRODUCTS
New England's Premier Precaster
800-696-7432 (SHEA)
www.sheaconcrete.com
MAILING ADDRESS: 87 HAVERHILL RD AMESBURY, MA 01913

NATIONAL GRID TRANSFORMER PAD
64" X 81" X 10" UF8A

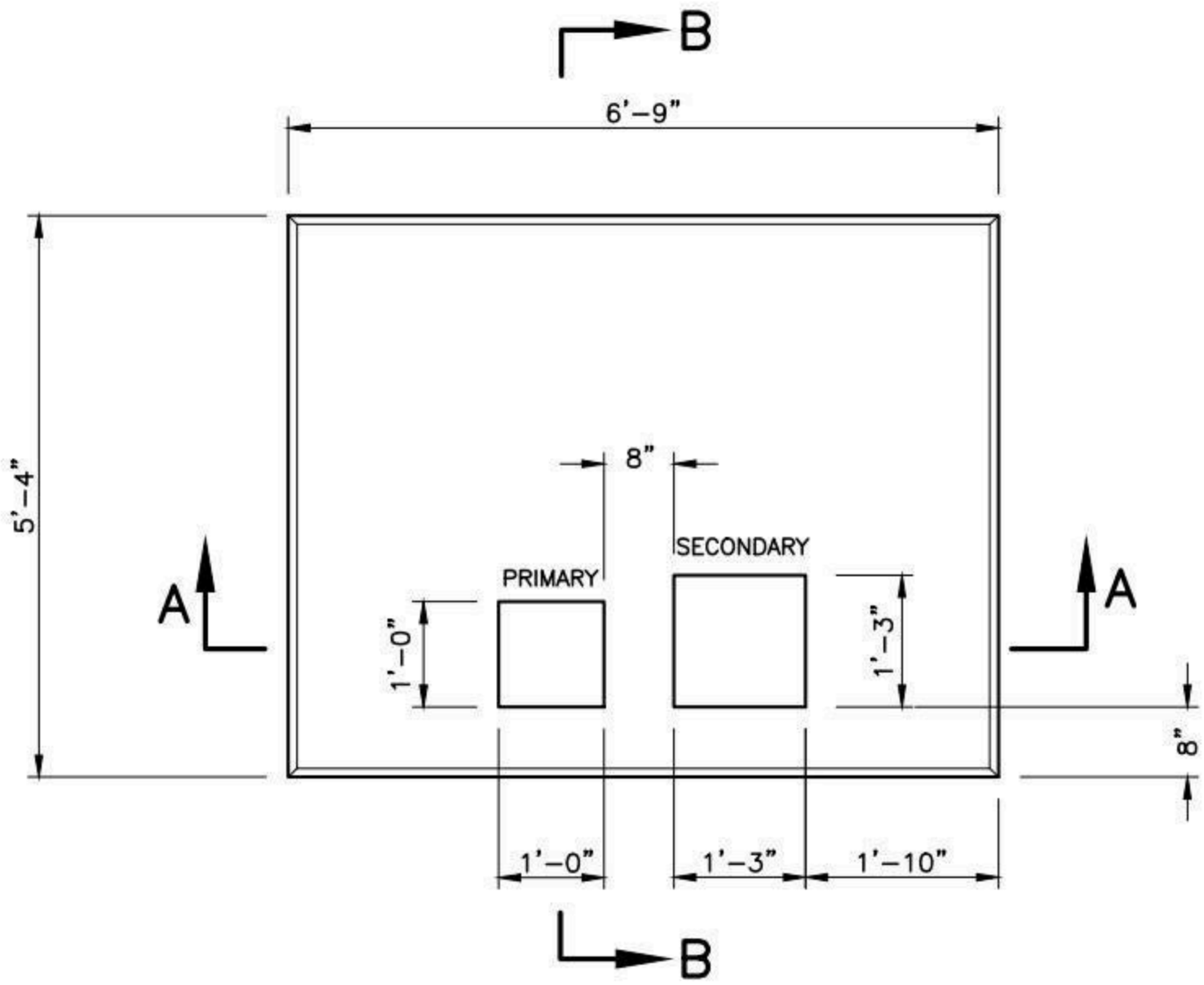

PLAN

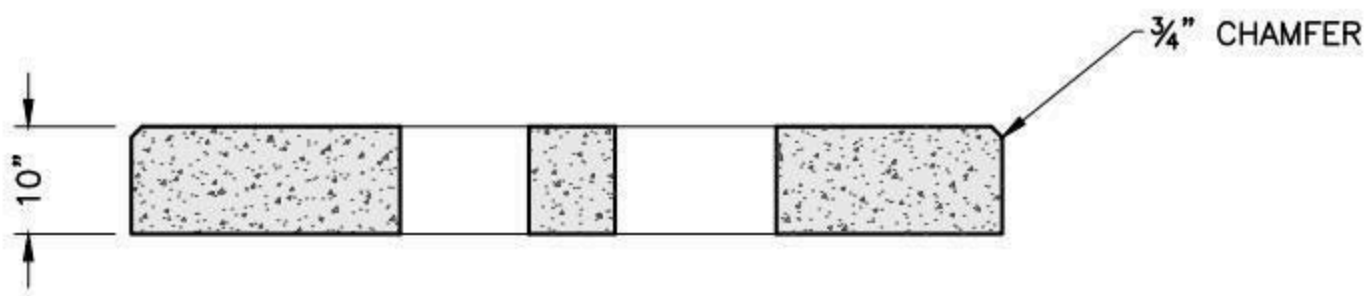

SECTION A–A

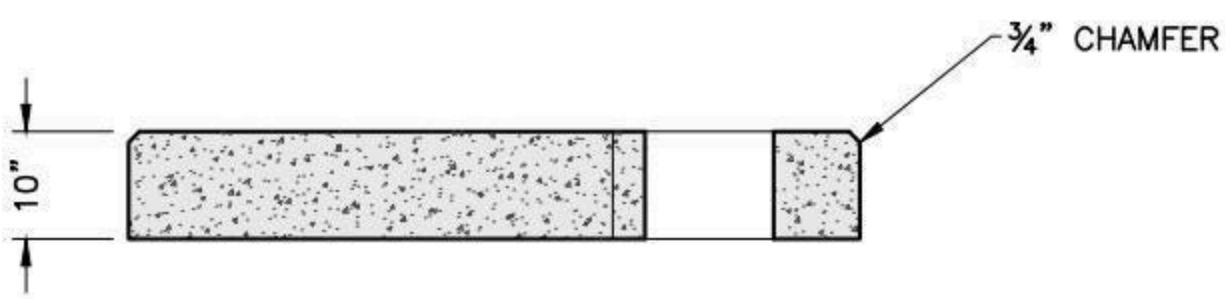

SECTION B–B

NOTES:

1. CONCRETE: 5,000 PSI MINIMUM AFTER 28 DAYS.
2. DESIGN LOADING: AASHTO HS20-44, 0 TO 5 FEET COVER.
3. DESIGN SPECIFICATIONS – ACI 318 & AASHTO LOAD FACTOR DESIGN METHOD.
4. STEEL REINFORCEMENT CONFORMS TO ASTM A615, GRADE 60. MINIMUM COVER 1"

SHEA PRODUCT ID: NGMS2582	FILE NAME: NG 75-500KVA			NPCA CERTIFIED PLANT
WEIGHT (LBS): 4040	DRAWN BY: L.P.	DATE: 1/4/2017	PAGE: IV.E.1	

Specifications subject to change without notice

SHEA CONCRETE PRODUCTS
New England's Premier Precaster
800-696-7432 (SHEA)
www.sheaconcrete.com
MAILING ADDRESS: 87 HAVERHILL RD AMESBURY, MA 01913

NATIONAL GRID OIL CONTAINMENT CURB 75-500 KVA UF7A

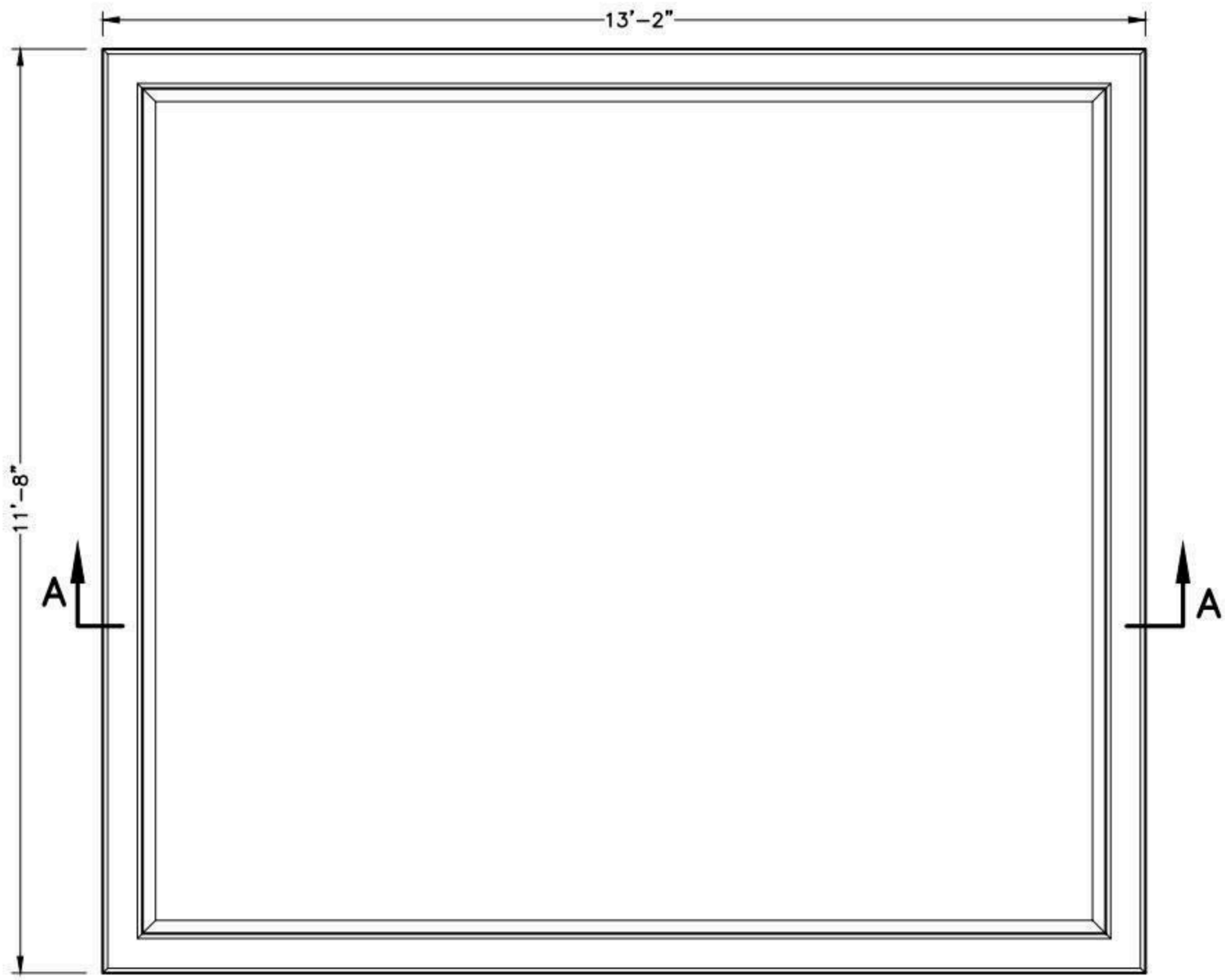

PLAN

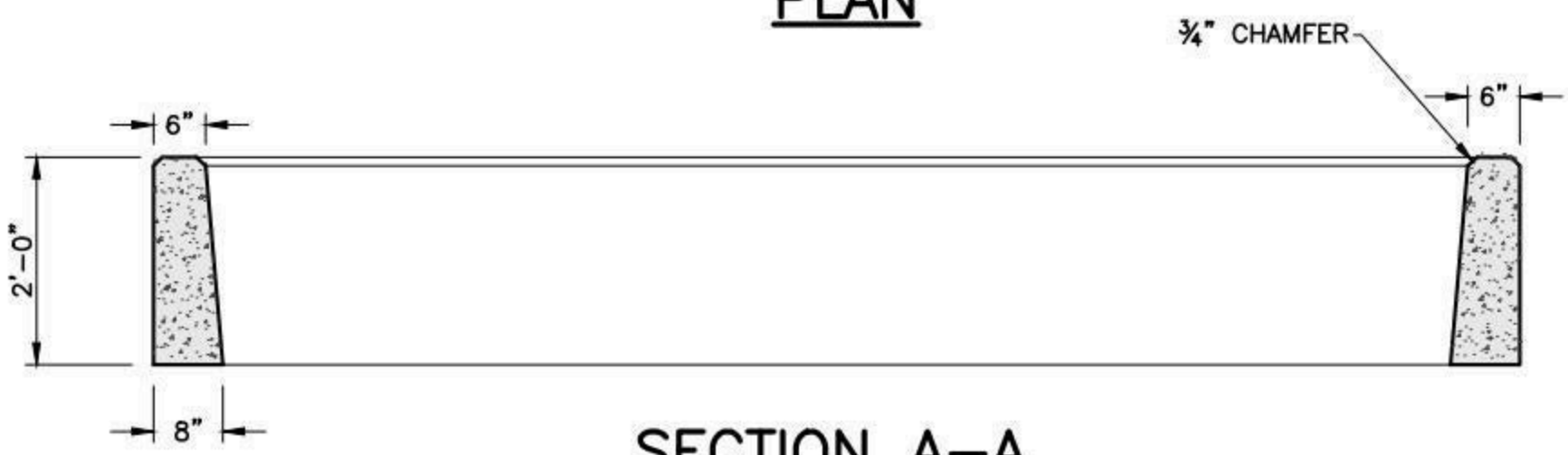

SECTION A-A

NOTES:

1. CONCRETE: 5,000 PSI MINIMUM AFTER 28 DAYS.
2. DESIGN LOADING: AASHTO HS20-44, 0 TO 5 FEET COVER.
3. DESIGN SPECIFICATIONS – ACI 318 & AASHTO LOAD FACTOR DESIGN METHOD.
4. STEEL REINFORCEMENT CONFORMS TO ASTM A615, GRADE 60. MINIMUM COVER 1"

SHEA PRODUCT ID: NGOC124X142	FILE NAME: NG CURB500KVA		
WEIGHT (LBS): 5365	DRAWN BY: L.P.	DATE: 1/4/2017	PAGE: IV.E.2

NPCA CERTIFIED PLANT

Specifications subject to change without notice

SHEA CONCRETE PRODUCTS
New England's Premier Precaster
800-696-7432 (SHEA)
www.sheaconcrete.com
MAILING ADDRESS: 87 HAVERHILL RD AMESBURY, MA 01913

NATIONAL GRID TRANSFORMER PAD 82" X 83" X 10" UF8B

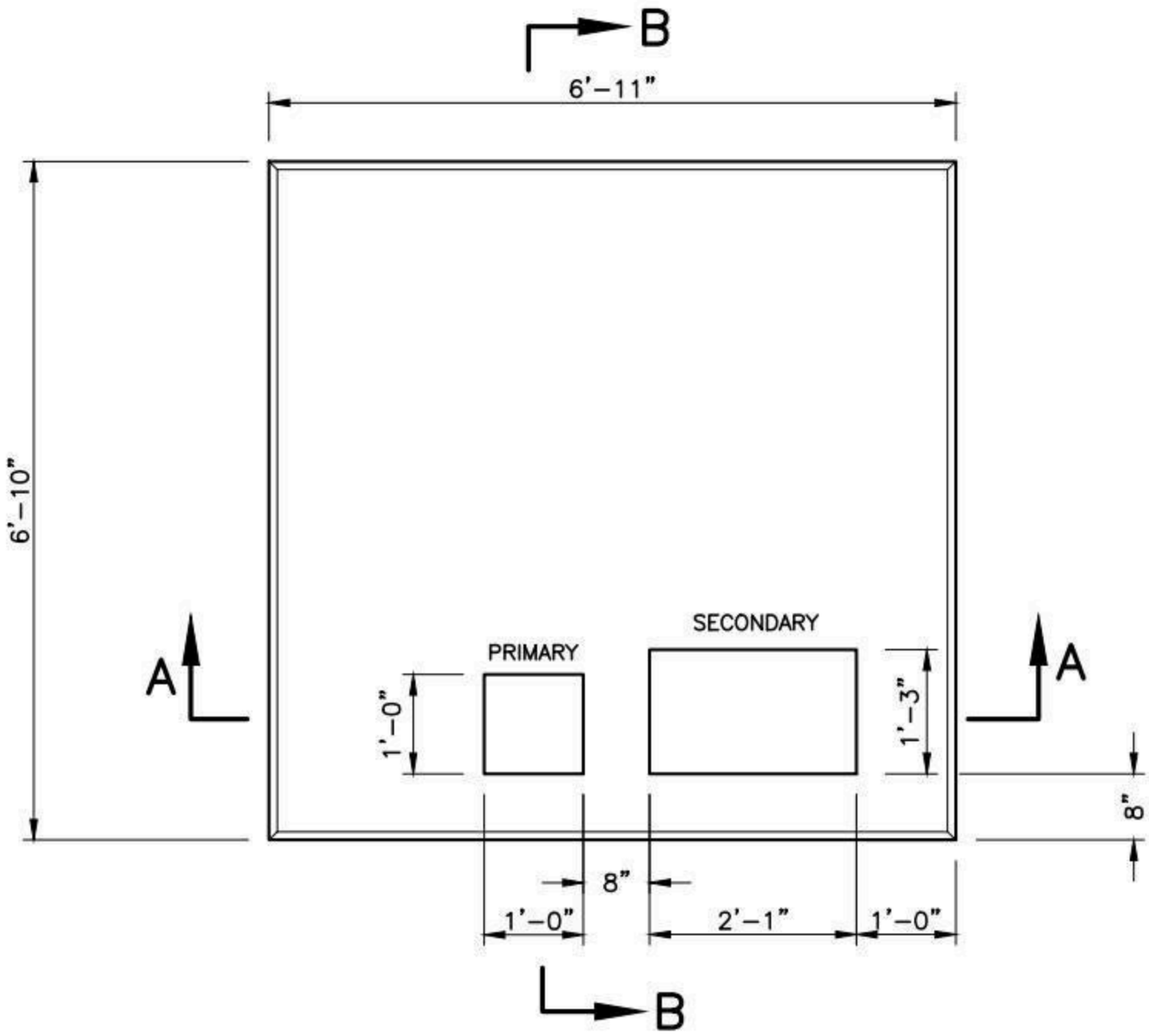

PLAN

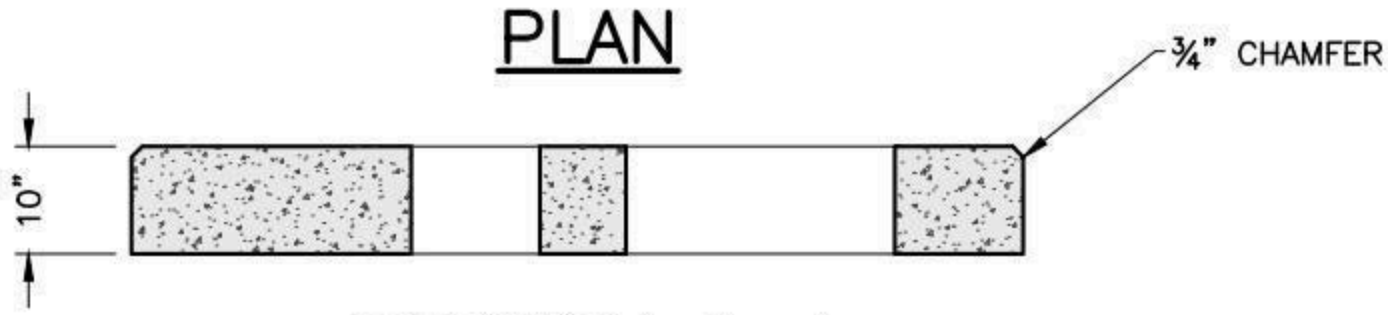

SECTION A–A

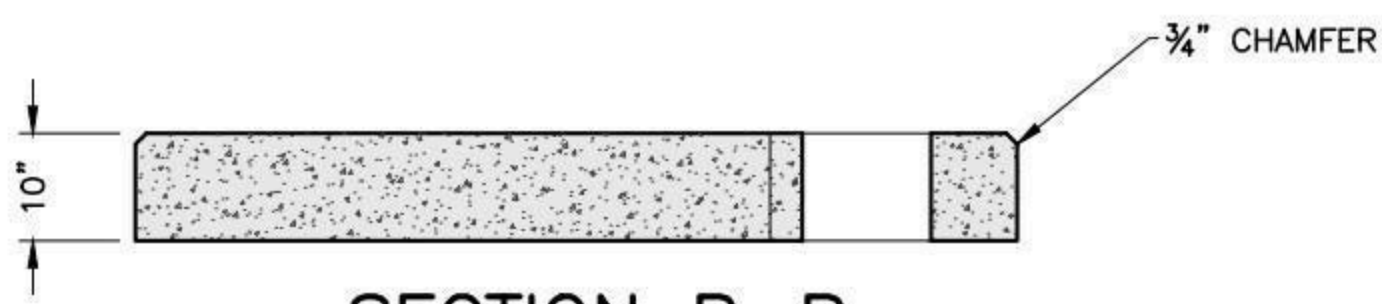

SECTION B–B

NOTES:

1. CONCRETE: 5,000 PSI MINIMUM AFTER 28 DAYS.
2. DESIGN LOADING: AASHTO HS20-44, 0 TO 5 FEET COVER.
3. DESIGN SPECIFICATIONS – ACI 318 & AASHTO LOAD FACTOR DESIGN METHOD.
4. STEEL REINFORCEMENT CONFORMS TO ASTM A615, GRADE 60. MINIMUM COVER 1"

SHEA PRODUCT ID: NGMS2583	FILE NAME: NG 750-2500KVA			NPCA CERTIFIED PLANT
WEIGHT (LBS): 5275	DRAWN BY: L.P.	DATE: 1/4/2017	PAGE: IV.E.3	

Specifications subject to change without notice

SHEA CONCRETE PRODUCTS
New England's Premier Precaster
800-696-7432 (SHEA)
www.sheaconcrete.com
MAILING ADDRESS: 87 HAVERHILL RD AMESBURY, MA 01913

NATIONAL GRID OIL CONTAINMENT CURB 750-2500 KVA UF7B

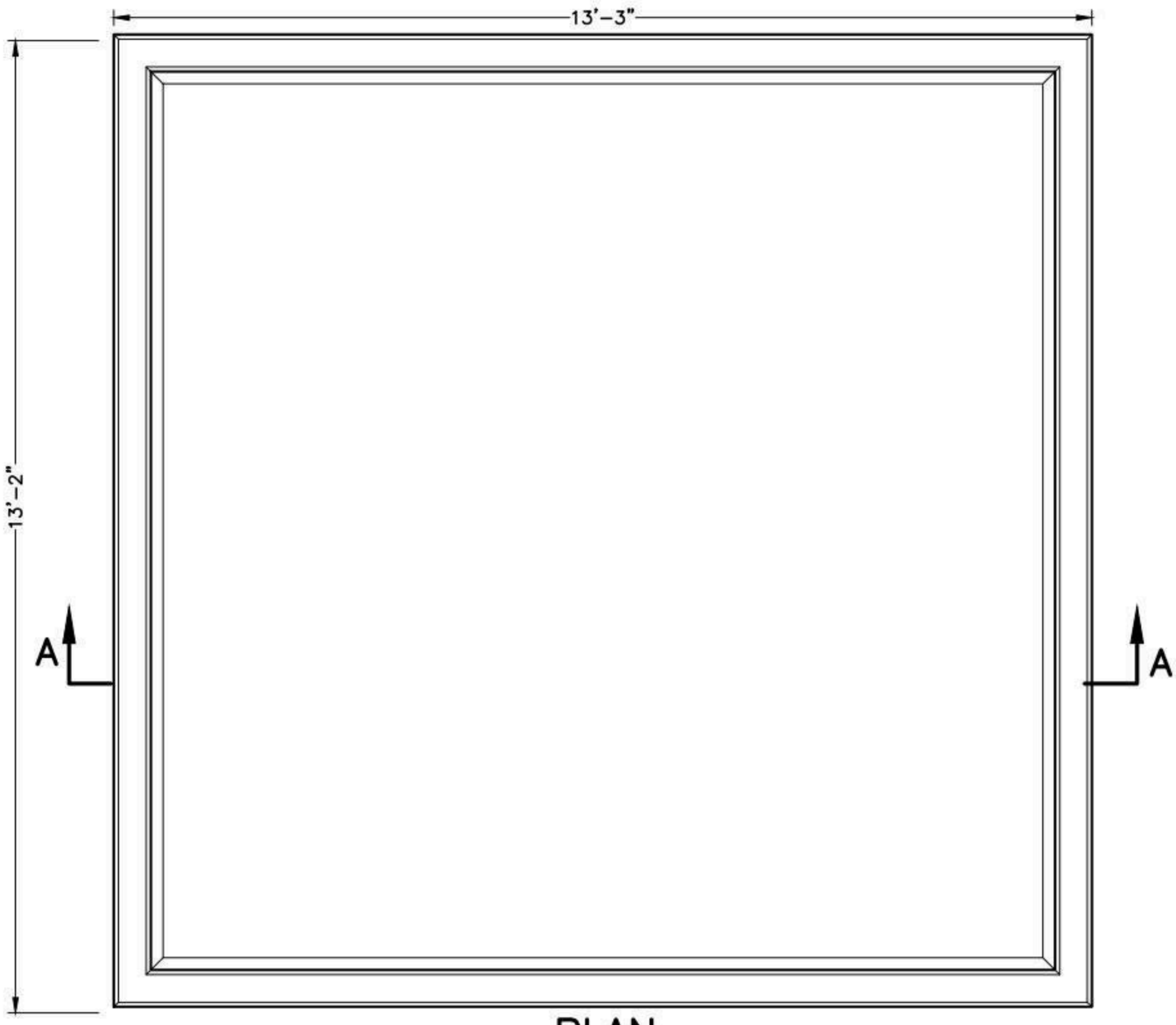

NOTES:

1. CONCRETE: 5,000 PSI MINIMUM AFTER 28 DAYS.
2. DESIGN LOADING: AASHTO HS20-44, 0 TO 5 FEET COVER.
3. DESIGN SPECIFICATIONS – ACI 318 & AASHTO LOAD FACTOR DESIGN METHOD.
4. STEEL REINFORCEMENT CONFORMS TO ASTM A615, GRADE 60. MINIMUM COVER 1"

SHEA PRODUCT ID: NGOC142X143	FILE NAME: NG CURB2500KVA		
WEIGHT (LBS): 6090	DRAWN BY: L.P.	DATE: 1/4/2017	PAGE: IV.E.4

NPCA CERTIFIED PLANT

Specifications subject to change without notice

SHEA CONCRETE PRODUCTS
New England's Premier Precaster
800-696-7432 (SHEA)
www.sheaconcrete.com
MAILING ADDRESS: 87 HAVERHILL RD AMESBURY, MA 01913

NATIONAL GRID TRANSFORMER PAD 62" X 85" X 10" UF8C

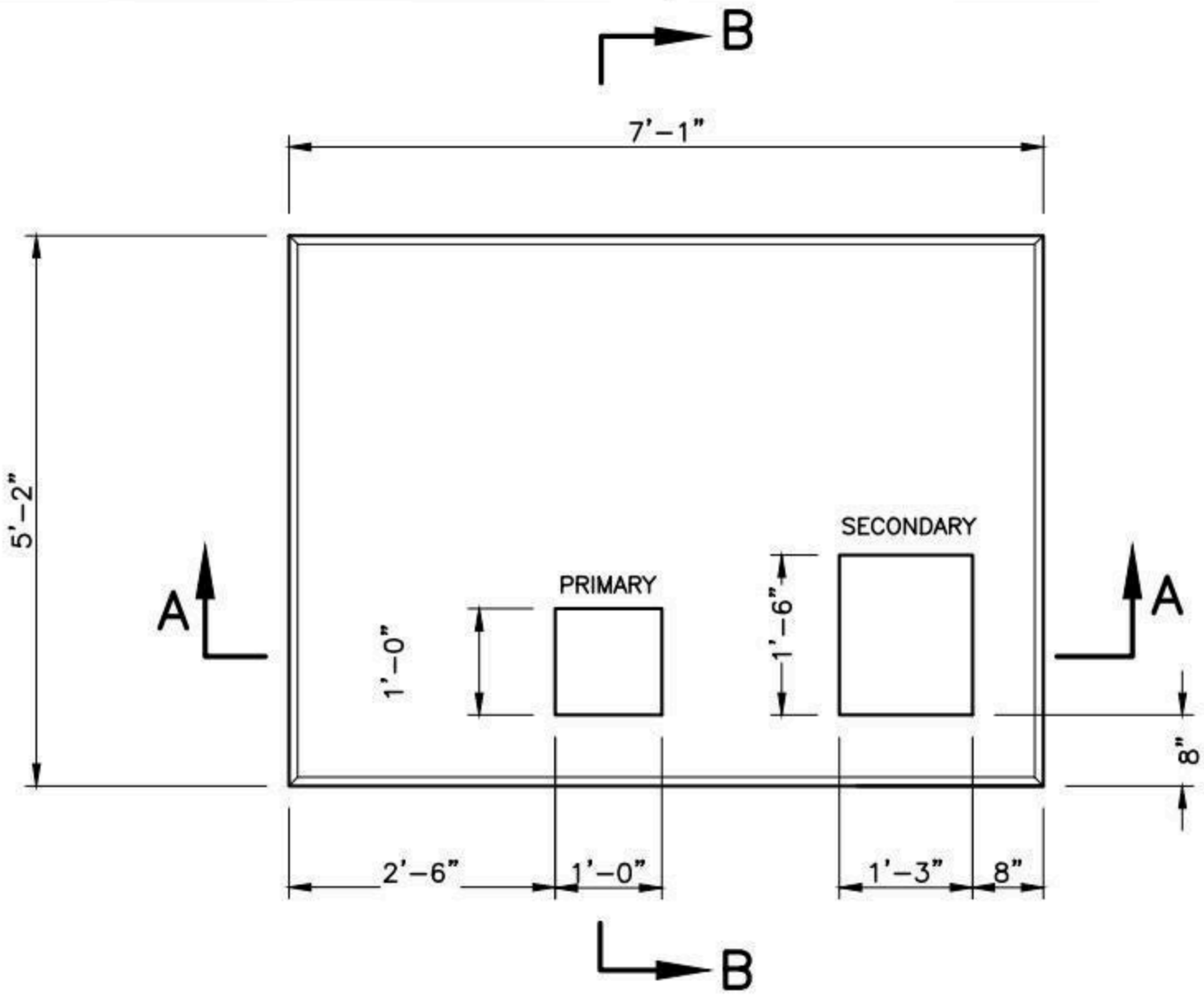

PLAN

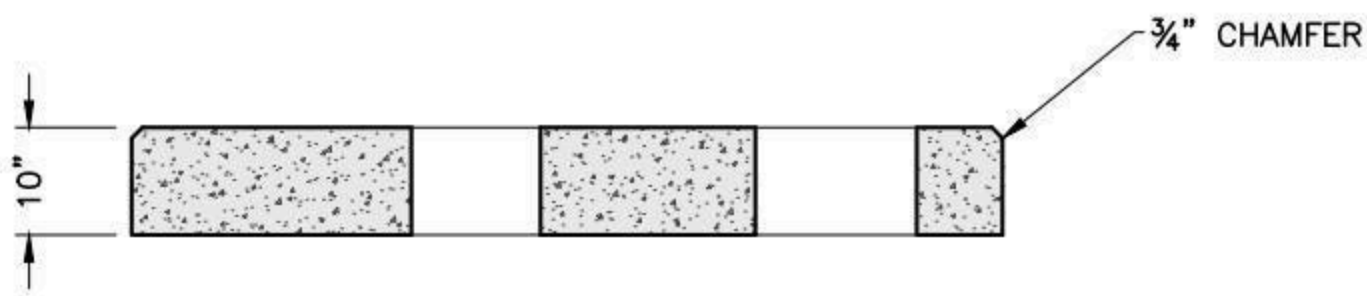

SECTION A–A

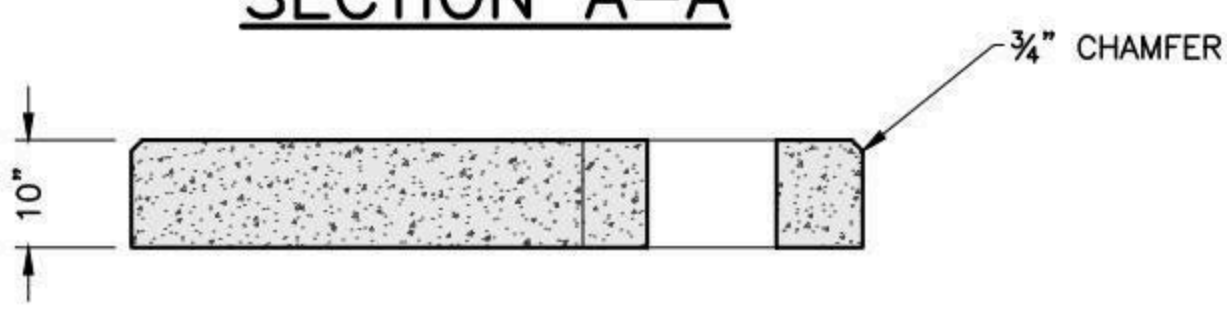

SECTION B–B

NOTES:

1. CONCRETE: 5,000 PSI MINIMUM AFTER 28 DAYS.
2. DESIGN LOADING: AASHTO HS20-44, 0 TO 5 FEET COVER.
3. DESIGN SPECIFICATIONS – ACI 318 & AASHTO LOAD FACTOR DESIGN METHOD.
4. STEEL REINFORCEMENT CONFORMS TO ASTM A615, GRADE 60. MINIMUM COVER 1"

SHEA PRODUCT ID: NG300KVA3	FILE NAME: NG 75-300KVA		
WEIGHT (LBS): 4425	DRAWN BY: L.P.	DATE: 1/4/2017	PAGE: IV.E.5

NPCA CERTIFIED PLANT

773 Salem Street–Wilmington, MA | 153 Cranberry Hwy–Rochester, MA | 87 Haverhill Road–Amesbury, MA | 160 Old Turnpike Rd–Nottingham, NH

Specifications subject to change without notice

SHEA CONCRETE PRODUCTS
New England's Premier Precaster
800-696-7432 (SHEA)
www.sheaconcrete.com
MAILING ADDRESS: 87 HAVERHILL RD AMESBURY, MA 01913

NATIONAL GRID TRANSFORMER PAD
84" X 96" X 10" UF8D

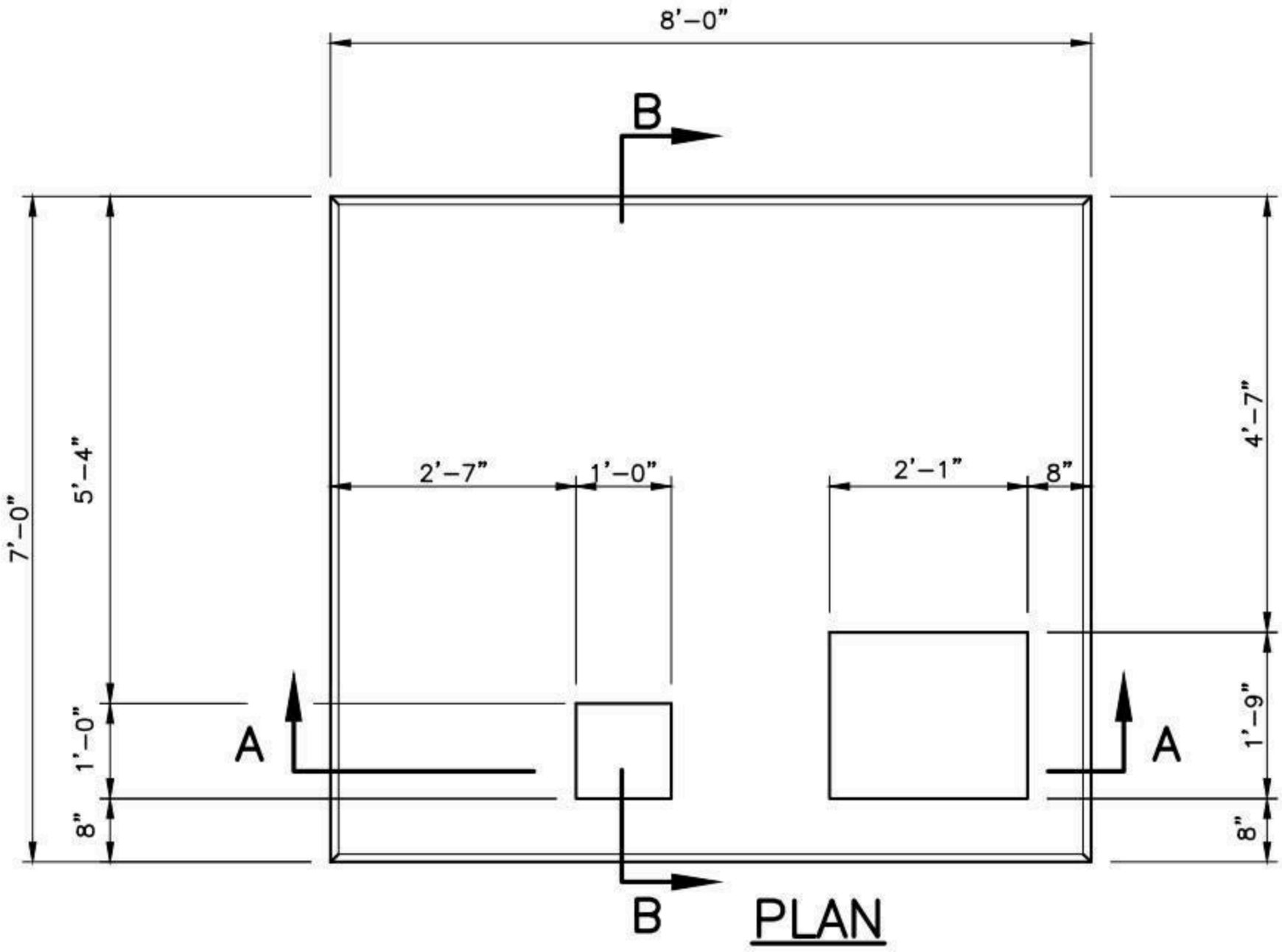

PLAN

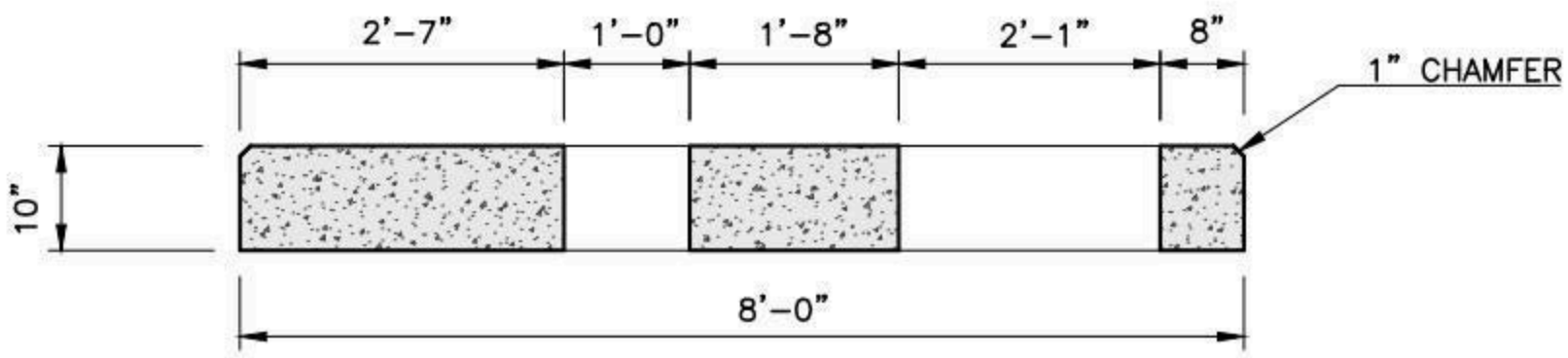

SECTION A-A

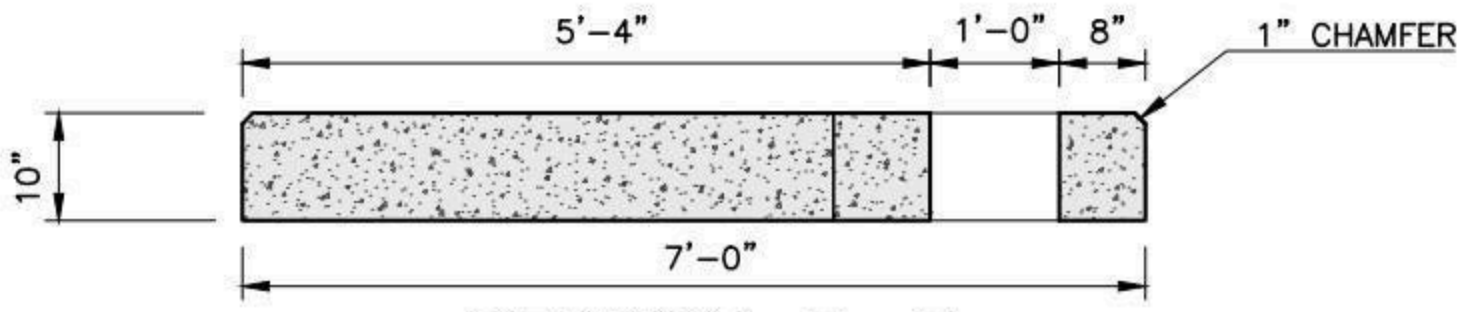

SECTION B-B

NOTES:

1. CONCRETE: 5,000 PSI MINIMUM AFTER 28 DAYS.
2. DESIGN LOADING: AASHTO HS20-44, 0 TO 5 FEET COVER.
3. DESIGN SPECIFICATIONS - ACI 318 & AASHTO LOAD FACTOR DESIGN METHOD.
4. STEEL REINFORCEMENT CONFORMS TO ASTM A615, GRADE 60. MINIMUM COVER 1"

SHEA PRODUCT ID: NGMS2585	FILE NAME: NG 2585 TP		
WEIGHT (LBS): 6770	DRAWN BY: L.P.	DATE: 1/4/2017	PAGE: IV.E.6

NPCA CERTIFIED PLANT

Specifications subject to change without notice

SHEA CONCRETE PRODUCTS
New England's Premier Precaster
800-696-7432 (SHEA)
www.sheaconcrete.com
MAILING ADDRESS: 87 HAVERHILL RD AMESBURY, MA 01913

NATIONAL GRID TRANSFORMER VAULT
62" X 85" X 2'-6"

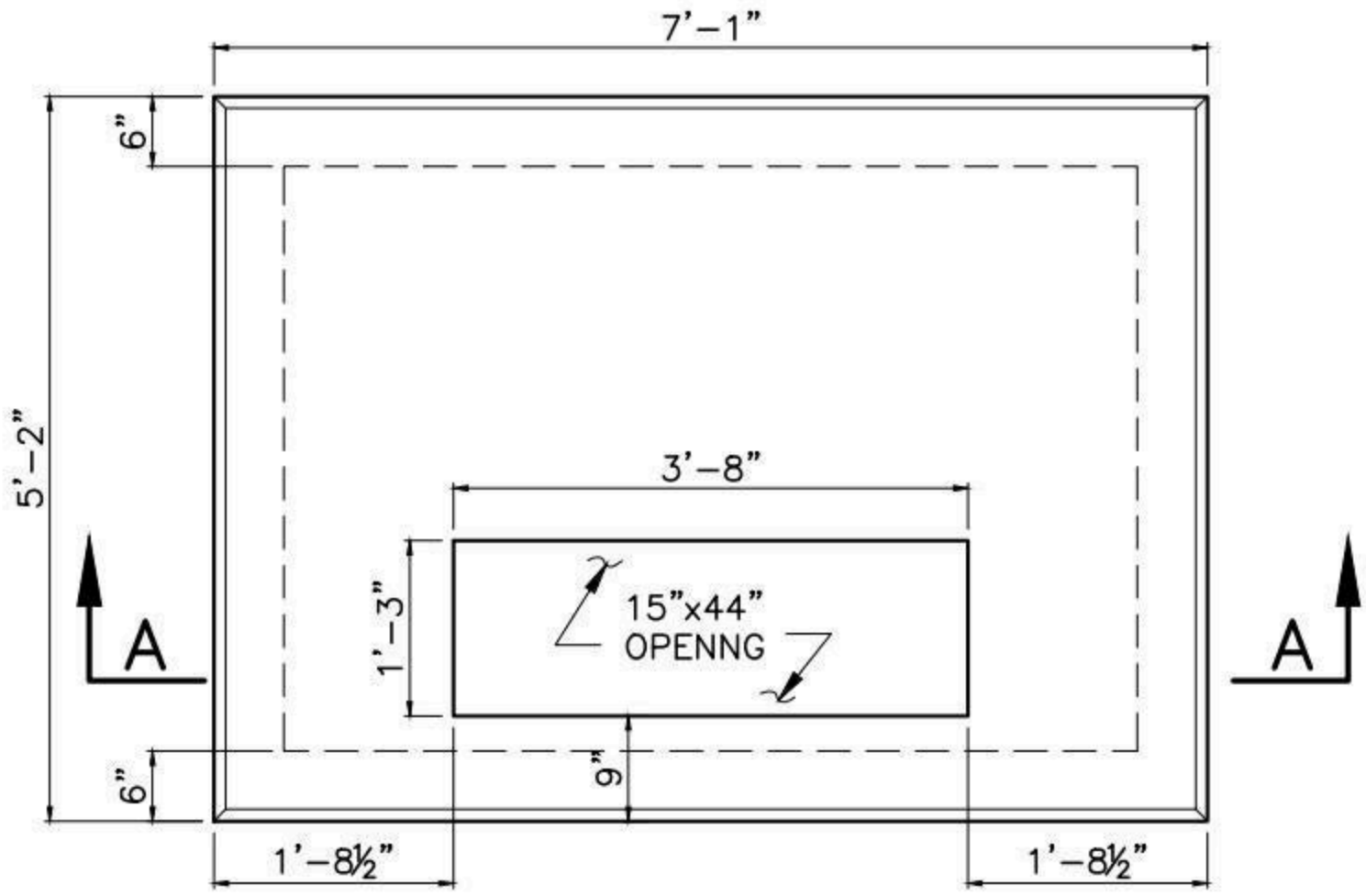

PLAN VIEW

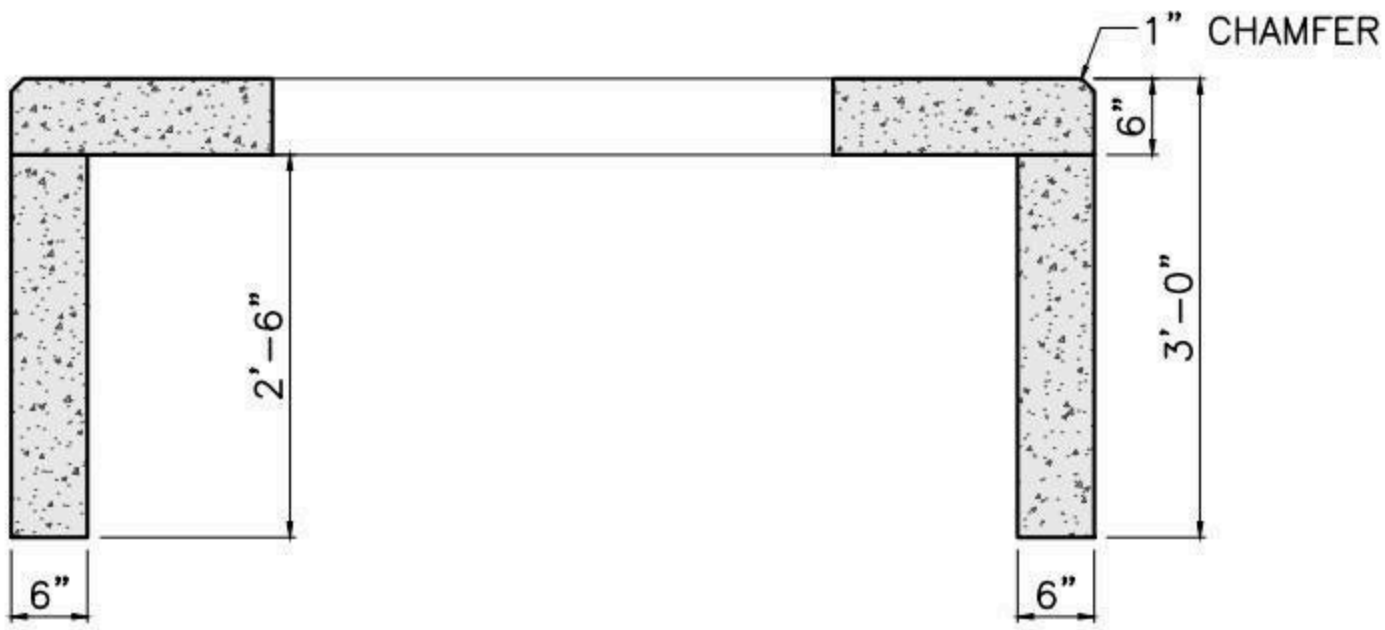

SECTION A-A

NOTES:

1. CONCRETE: 5,000 PSI MINIMUM AFTER 28 DAYS.
2. DESIGN LOADING: AASHTO HS20-44, 0 TO 5 FEET COVER.
3. DESIGN SPECIFICATIONS - ACI 318 & AASHTO LOAD FACTOR DESIGN METHOD.
4. STEEL REINFORCEMENT CONFORMS TO ASTM A615, GRADE 60. MINIMUM COVER 1".
5. CONSTRUCTION JOINT SHALL BE SEALED WITH 1"ø BUTYL RUBBER OR APPROVED EQUAL.

SHEA PRODUCT ID: NGTV2584	FILE NAME: NGRID MS 2584			NPCA CERTIFIED PLANT
WEIGHT (LBS): 6400	DRAWN BY: L.P.	DATE: 1/4/2017	PAGE: IV.F.1	

Specifications subject to change without notice

SHEA CONCRETE PRODUCTS
New England's Premier Precaster
800-696-7432 (SHEA)
www.sheaconcrete.com
MAILING ADDRESS: 87 HAVERHILL RD AMESBURY, MA 01913

NATIONAL GRID TRANSFORMER VAULT
84" X 96" X 2'-6"

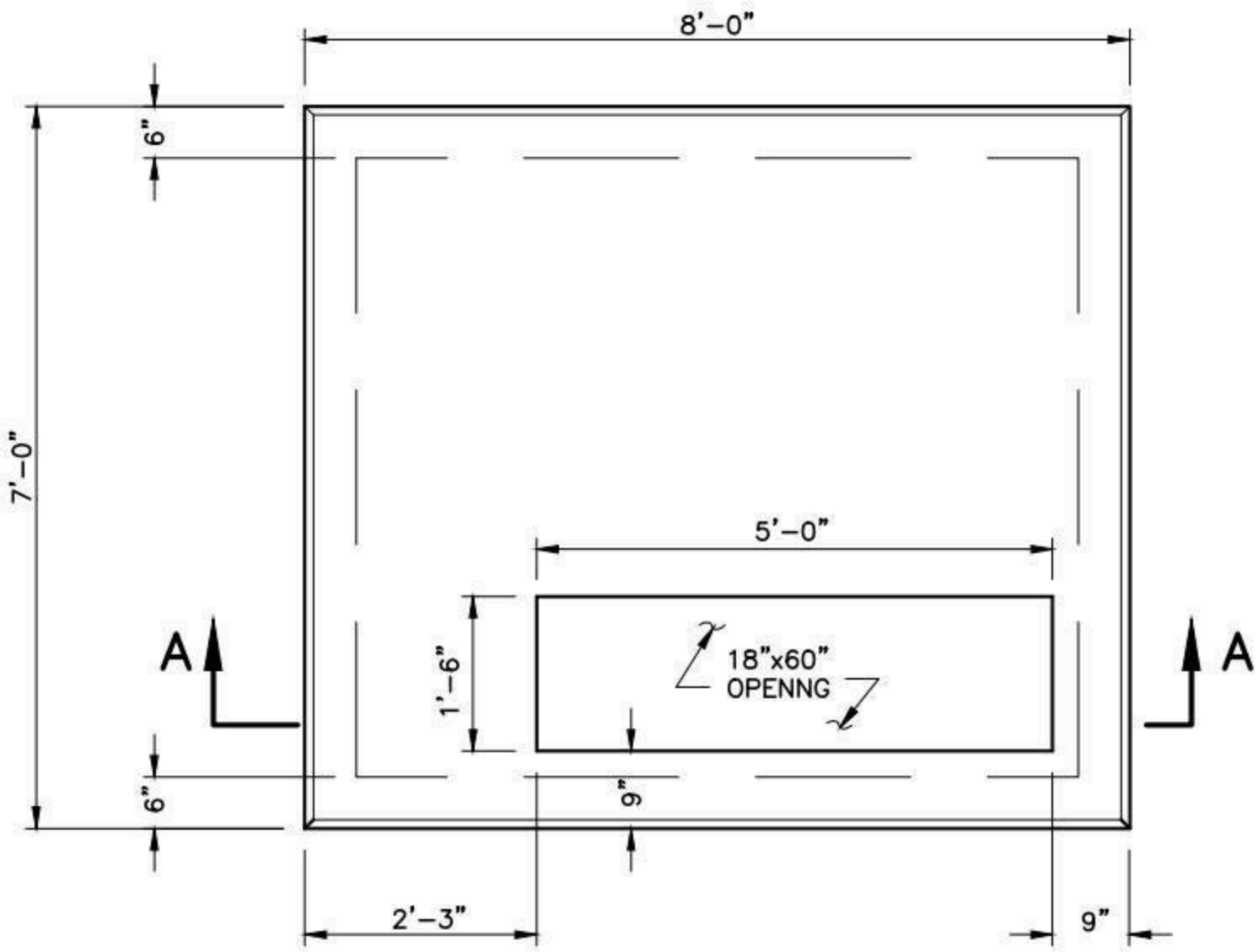

PLAN

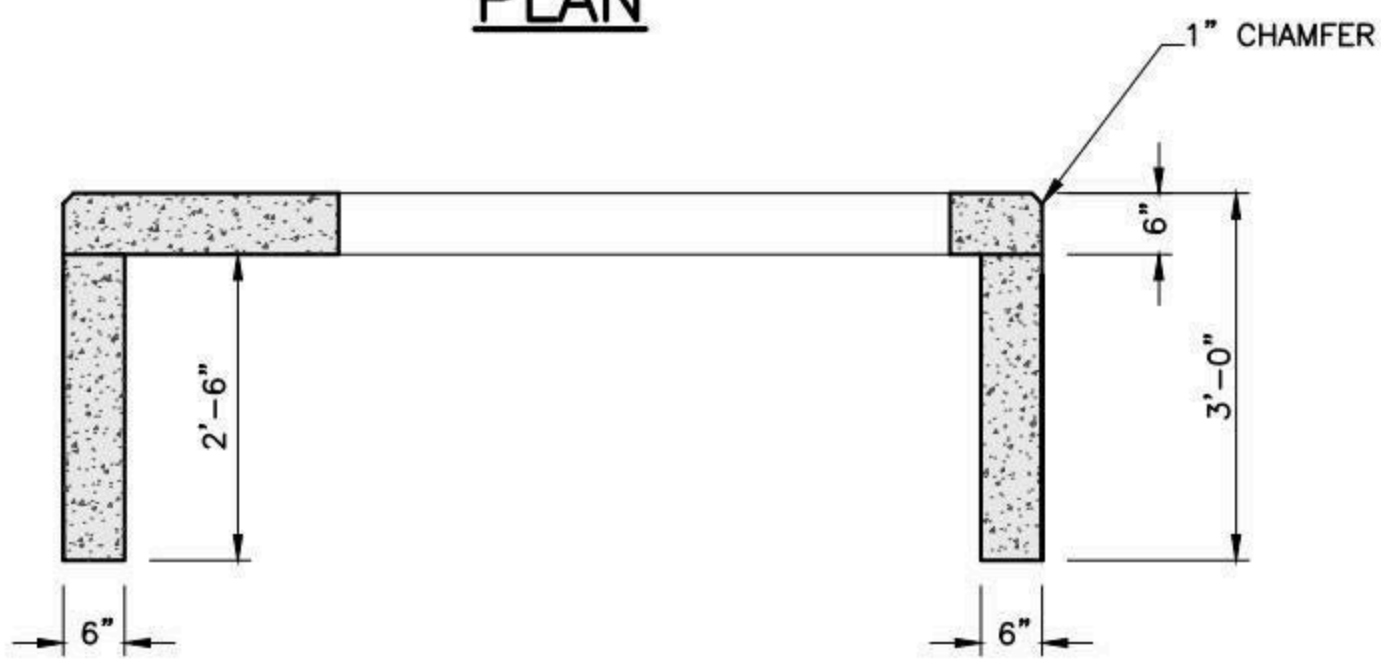

SECTION A-A

NOTES:

1. CONCRETE: 5,000 PSI MINIMUM AFTER 28 DAYS.
2. DESIGN LOADING: AASHTO HS20-44, 0 TO 5 FEET COVER.
3. DESIGN SPECIFICATIONS – ACI 318 & AASHTO LOAD FACTOR DESIGN METHOD.
4. STEEL REINFORCEMENT CONFORMS TO ASTM A615, GRADE 60. MINIMUM COVER 1".
5. CONSTRUCTION JOINT SHALL BE SEALED WITH 1"ø BUTYL RUBBER OR APPROVED EQUAL.

SHEA PRODUCT ID: NGTV2585	FILE NAME: NGRID MS 2585			NPCA CERTIFIED PLANT
WEIGHT (LBS): 8590	DRAWN BY: L.P.	DATE: 1/4/2017	PAGE: IV.F.2	

Specifications subject to change without notice

SHEA CONCRETE PRODUCTS
New England's Premier Precaster
800-696-7432 (SHEA)
www.sheaconcrete.com
MAILING ADDRESS: 87 HAVERHILL RD AMESBURY, MA 01913

NH CO-OP U5-4 SINGLE PHASE PULL VAULT

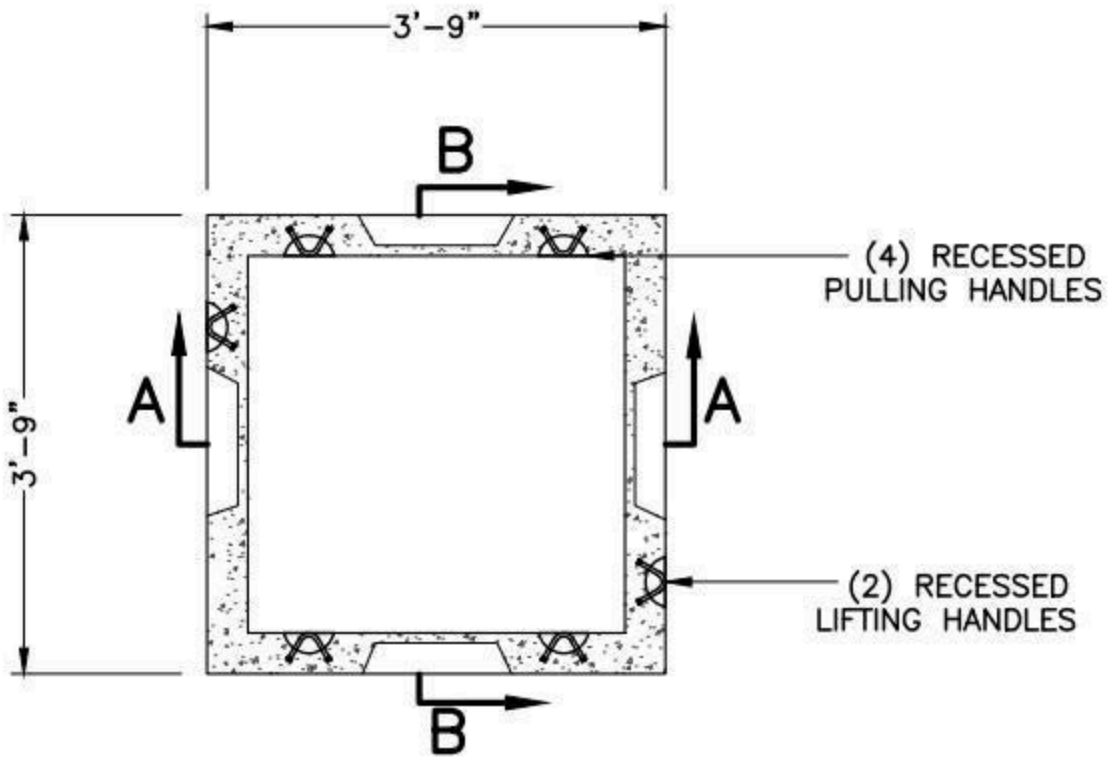

PLAN VIEW

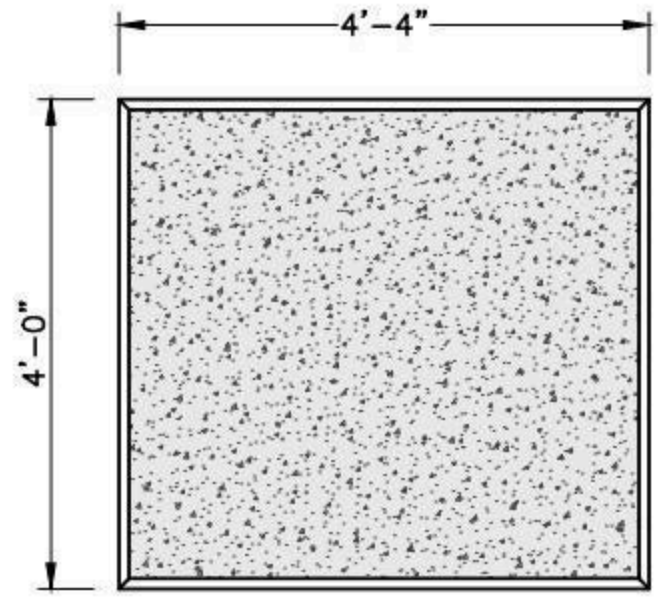

COVER
U5-4C

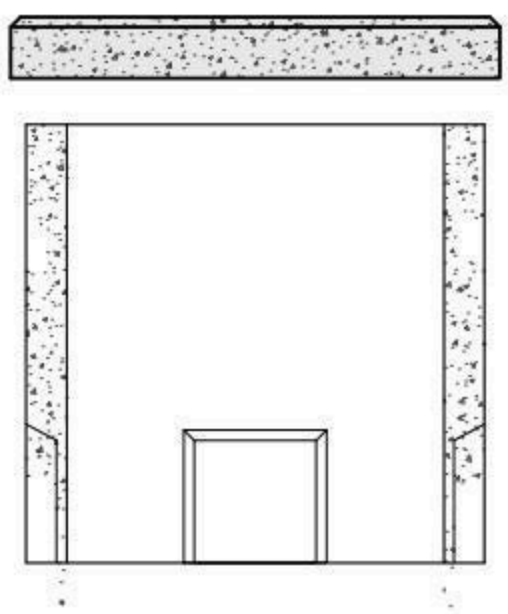

SECTION A-A

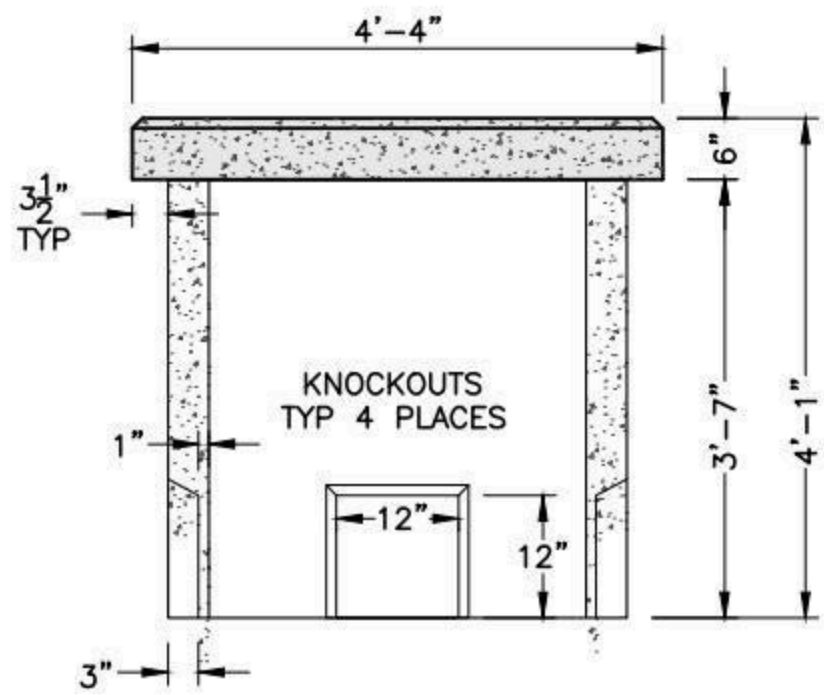

ASSEMBLED

NOTES:

1. CONCRETE MINIMUM STRENGTH 4,000 PSI AFTER 28 DAYS.
2. REINFORCING STEEL CONFORMS TO: ASTM A615 GRADE 60.
3. CONFORMS TO NHEC SPECIFICATION.
4. VAULT ASSEMBLY FOR PULLING (REF:U7-5B COVER).
5. TOP OF VAULT SHALL BE 4"-6" ABOVE FINISH GRADE.
6. VAULT IS FOR NON-TRAFFIC APPLICATIONS.

SHEA PRODUCT ID: NHEC-U54PV	FILE NAME: U5-4 SINGLE PHASE PULL VAULT.dwg		
WEIGHT (LBS): 4,170#	DRAWN BY: MNN	DATE: 12/22/2017	PAGE: V.A.1

NPCA CERTIFIED PLANT

Specifications subject to change without notice

SHEA CONCRETE PRODUCTS
New England's Premier Precaster
800-696-7432 (SHEA)
www.sheaconcrete.com
MAILING ADDRESS: 87 HAVERHILL RD AMESBURY, MA 01913

NH CO-OP U5-4 SINGLE PHASE TRANSFORMER ASSEMBLY

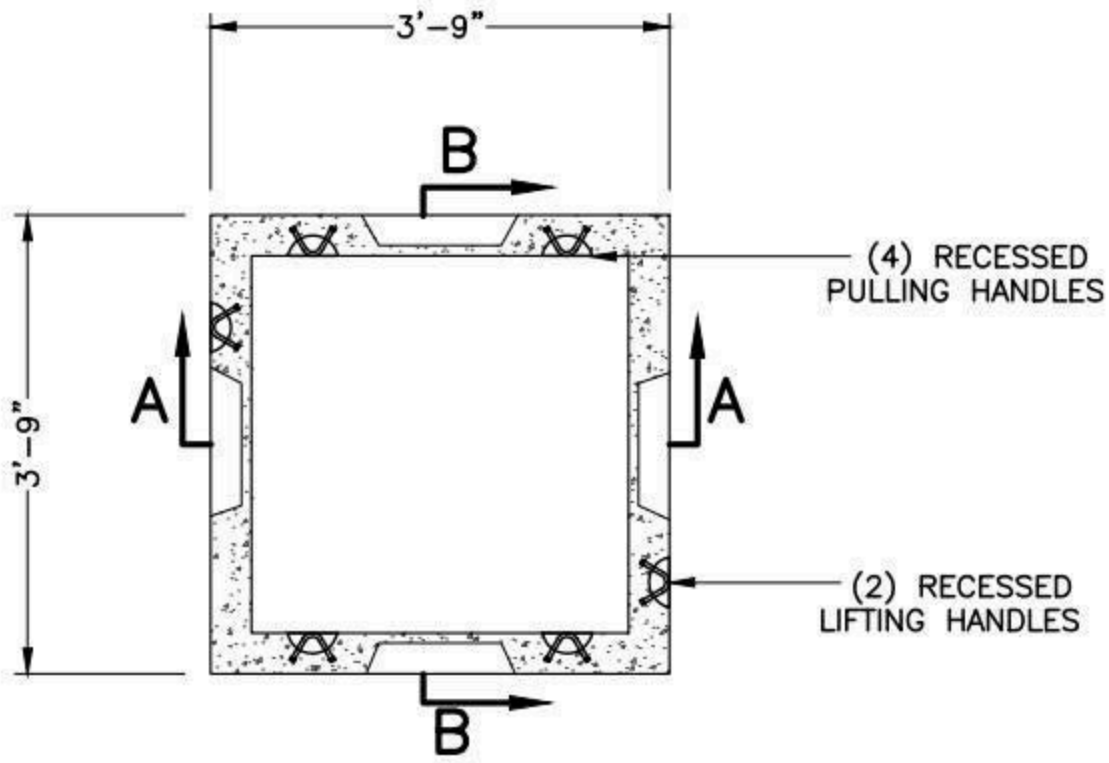

PLAN VIEW

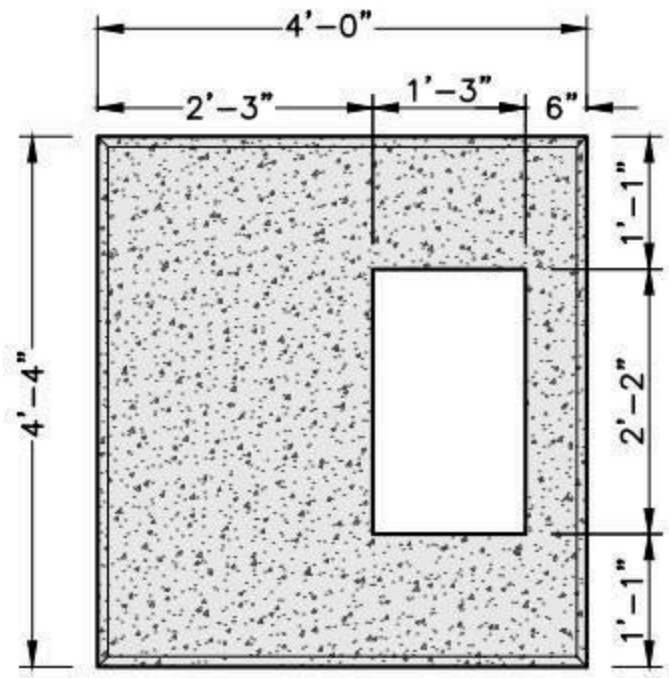

COVER
U5-4P

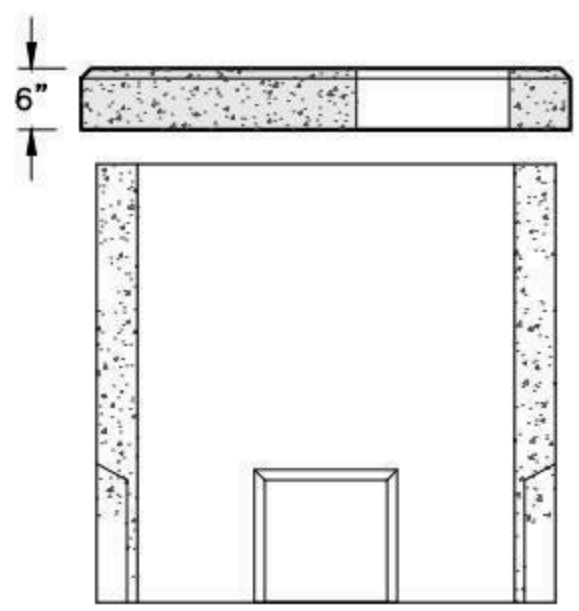

SECTION A-A

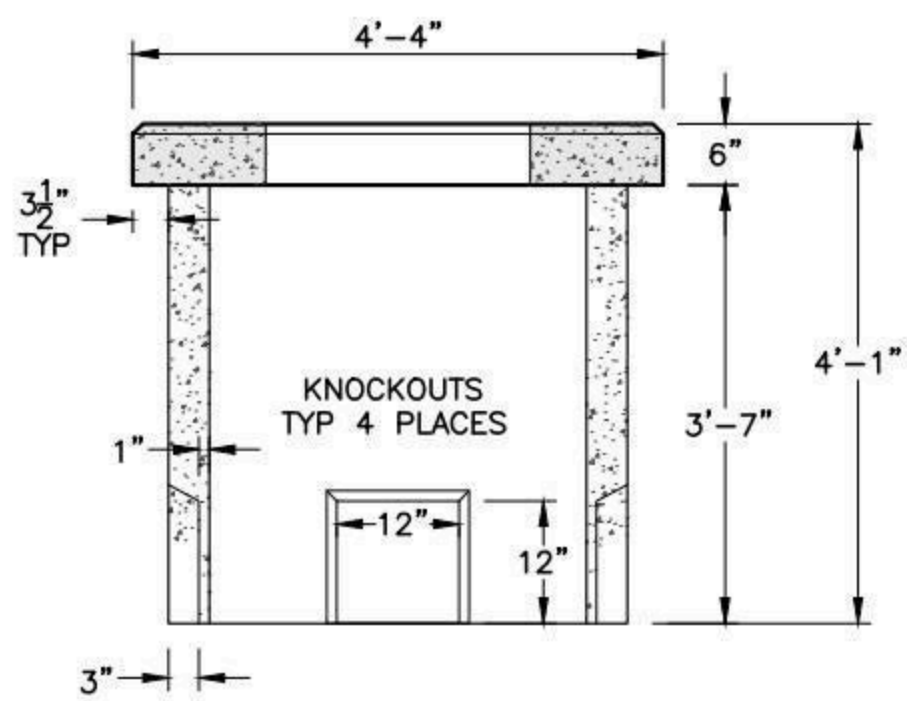

ASSEMBLED

NOTES:

1. CONCRETE MINIMUM STRENGTH 4,000 PSI AFTER 28 DAYS.
2. REINFORCING STEEL CONFORMS TO: ASTM A615 GRADE 60.
3. CONFORMS TO NHEC SPECIFICATION.
4. VAULT ASSEMBLY FOR SINGLE RESIDENCE TRANSFORMER (REF:U6-5A PAD).
5. TOP OF VAULT SHALL BE 4"-6" ABOVE FINISH GRADE.
6. VAULT IS FOR NON-TRAFFIC APPLICATIONS.

SHEA PRODUCT ID: NHEC-U54T	FILE NAME: U5-4 SINGLE PHASE TRANSFORMER.dwg		
WEIGHT (LBS): 4,170#	DRAWN BY: NMB	DATE: 12/26/2017	PAGE: V.A.2

NPCA CERTIFIED PLANT

Specifications subject to change without notice

SHEA CONCRETE PRODUCTS
New England's Premier Precaster
800-696-7432 (SHEA)
www.sheaconcrete.com
MAILING ADDRESS: 87 HAVERHILL RD AMESBURY, MA 01913

NH CO-OP U5-5 SINGLE PHASE SECTIONALIZING VAULT (30" CABINET)

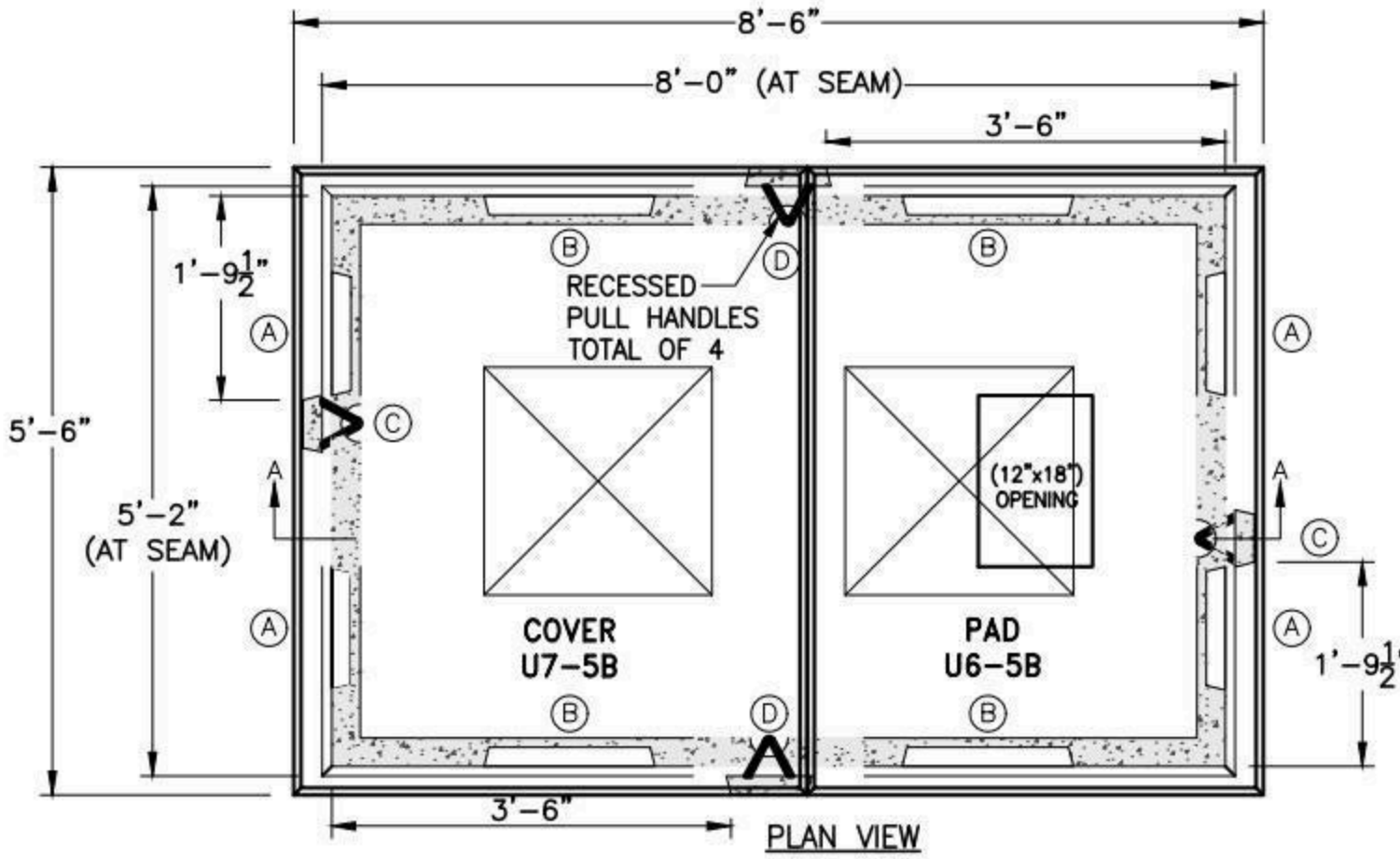

PLAN VIEW

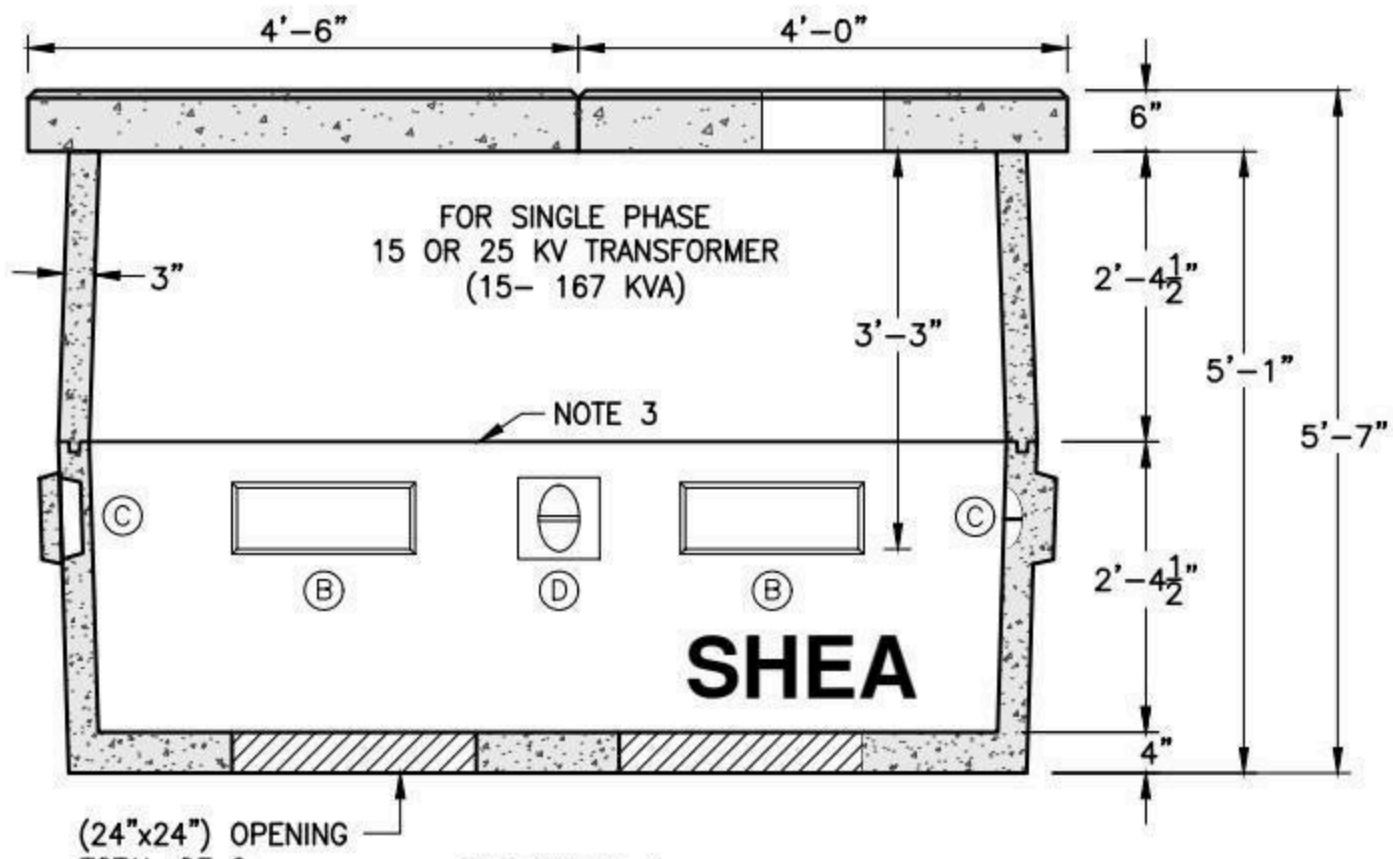

SECTION A-A

EST WEIGHT:

COVER:	1,840 LBS
PAD:	1,520 LBS
RISER:	2,375 LBS
BASE:	4,300 LBS
TOTAL:	10,035 LBS

GENERAL NOTES:
1. CONCRETE: 5,000 PSI MIN. AFTER 28 DAYS
2. REINFORCING STEEL: ASTM A-615 GRADE 60
3. BUTYL JOINT SEALANT PROVIDED
4. CONFORMS TO NHEC SPECIFICATION
5. TOP OF VAULT SHALL BE 4"-6" ABOVE FINISH GRADE
6. VAULT IS FOR NON-TRAFFIC APPLICATIONS
7. VAULT IS FOR 30" LENGTH SECTIONALIZER

KNOCKOUTS				BUMP-OUTS			
MARK:	QTY:	DIM:	PLACE:	MARK:	QTY:	DIM:	PLACE:
(A)	(4)	(6"x12"x2")	EA. END	(C)	(2)	(5"x8"x2")	EA. END
(B)	(4)	(6"x17"x2")	EA. SIDE	(D)	(2)	(8"x8"x2")	EA. SIDE

SHEA PRODUCT ID: NHEC-U551PSEC	FILE NAME: U5-5 SINGLE PHASE SEC VAULT 30.dwg		
WEIGHT (LBS): 10,035#	DRAWN BY: NMB	DATE: 06/22/2015	PAGE: V.A.3

NPCA CERTIFIED PLANT

Specifications subject to change without notice

SHEA CONCRETE PRODUCTS
New England's Premier Precaster
800-696-7432 (SHEA)
www.sheaconcrete.com
MAILING ADDRESS: 87 HAVERHILL RD AMESBURY, MA 01913

NH CO-OP U5-5 SPLICING & PULLING VAULT

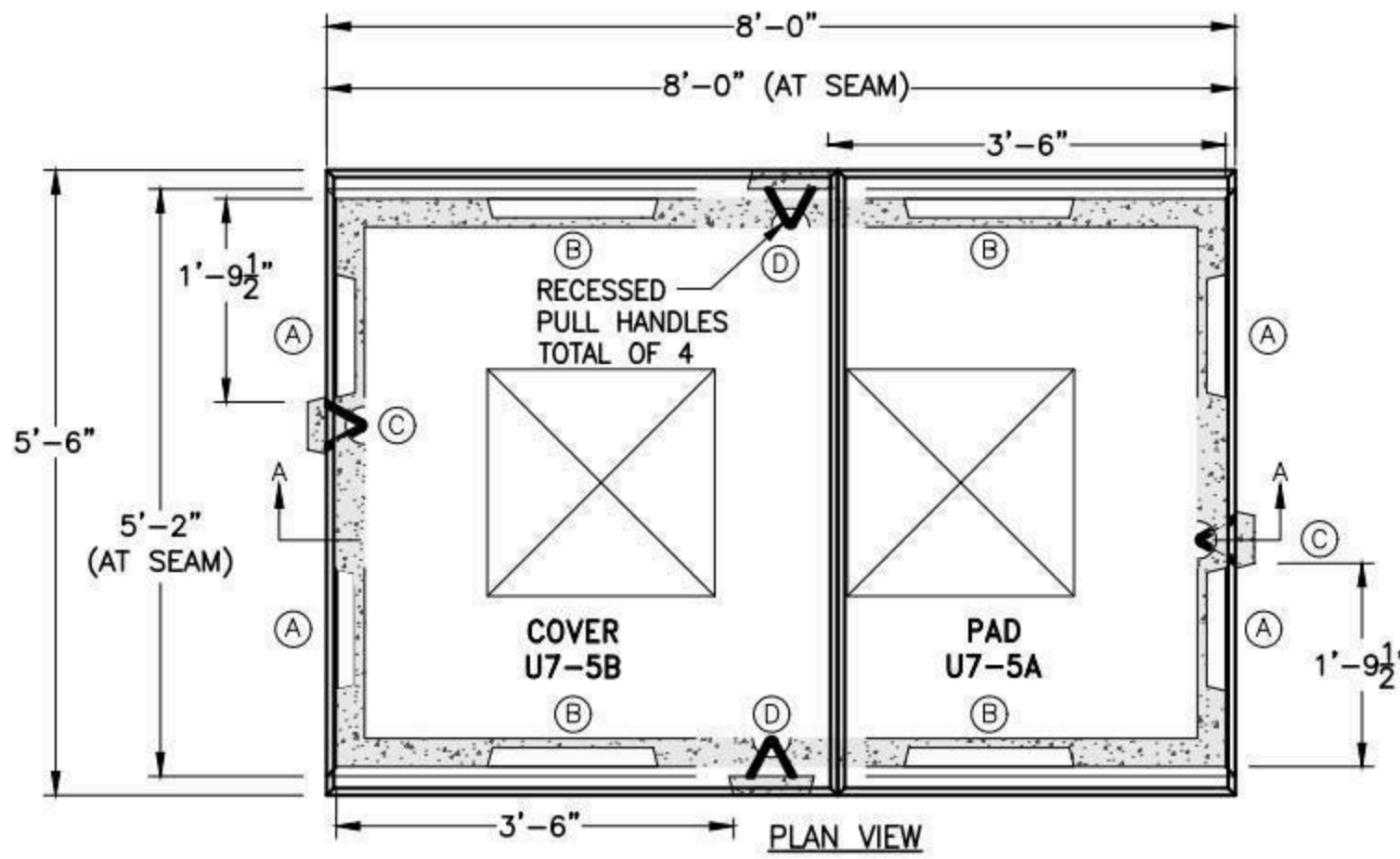

PLAN VIEW

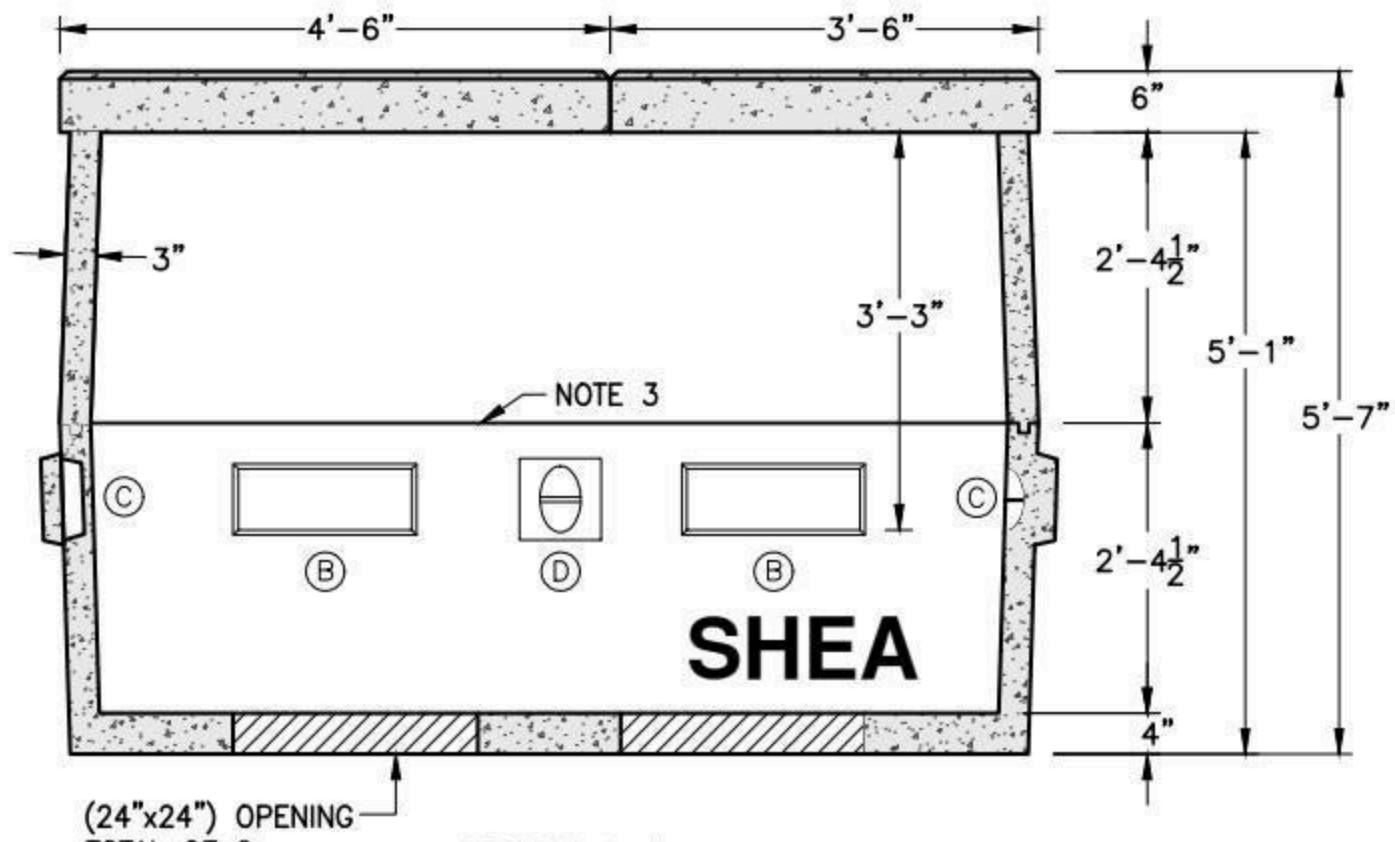

SECTION A-A

EST WEIGHT:

COVER A:	1,425 LBS
COVER B:	1,840 LBS
RISER:	2,375 LBS
BASE:	4,300 LBS
TOTAL:	9,940 LBS

GENERAL NOTES:
1. CONCRETE: 5,000 PSI MIN. AFTER 28 DAYS
2. REINFORCING STEEL: ASTM A-615 GRADE 60
3. BUTYL JOINT SEALANT PROVIDED
4. CONFORMS TO NHEC SPECIFICATION
5. TOP OF VAULT SHALL BE 4"-6" ABOVE FINISH GRADE
6. VAULT IS FOR MULTIPLE RESIDENCE APPLICATIONS
7. VAULT IS FOR NON-TRAFFIC APPLICATIONS

KNOCKOUTS				BUMP-OUTS			
MARK:	QTY:	DIM:	PLACE:	MARK:	QTY:	DIM:	PLACE:
(A)	(4)	(6"x12"x2")	EA. END	(C)	(2)	(5"x8"x2")	EA. END
(B)	(4)	(6"x17"x2")	EA. SIDE	(D)	(2)	(8"x8"x2")	EA. SIDE

SHEA PRODUCT ID: NHEC-U551PSPLICE	FILE NAME: U5-5 SINGLE PHASE SPLICE PULL.dwg		
WEIGHT (LBS): 9,940#	DRAWN BY: NMB	DATE: 06/22/2015	PAGE: V.A.4

NPCA CERTIFIED PLANT

Specifications subject to change without notice

SHEA CONCRETE PRODUCTS
New England's Premier Precaster
800-696-7432 (SHEA)
www.sheaconcrete.com
MAILING ADDRESS: 87 HAVERHILL RD AMESBURY, MA 01913

NH CO-OP U5-5 TRANSFORMER VAULT

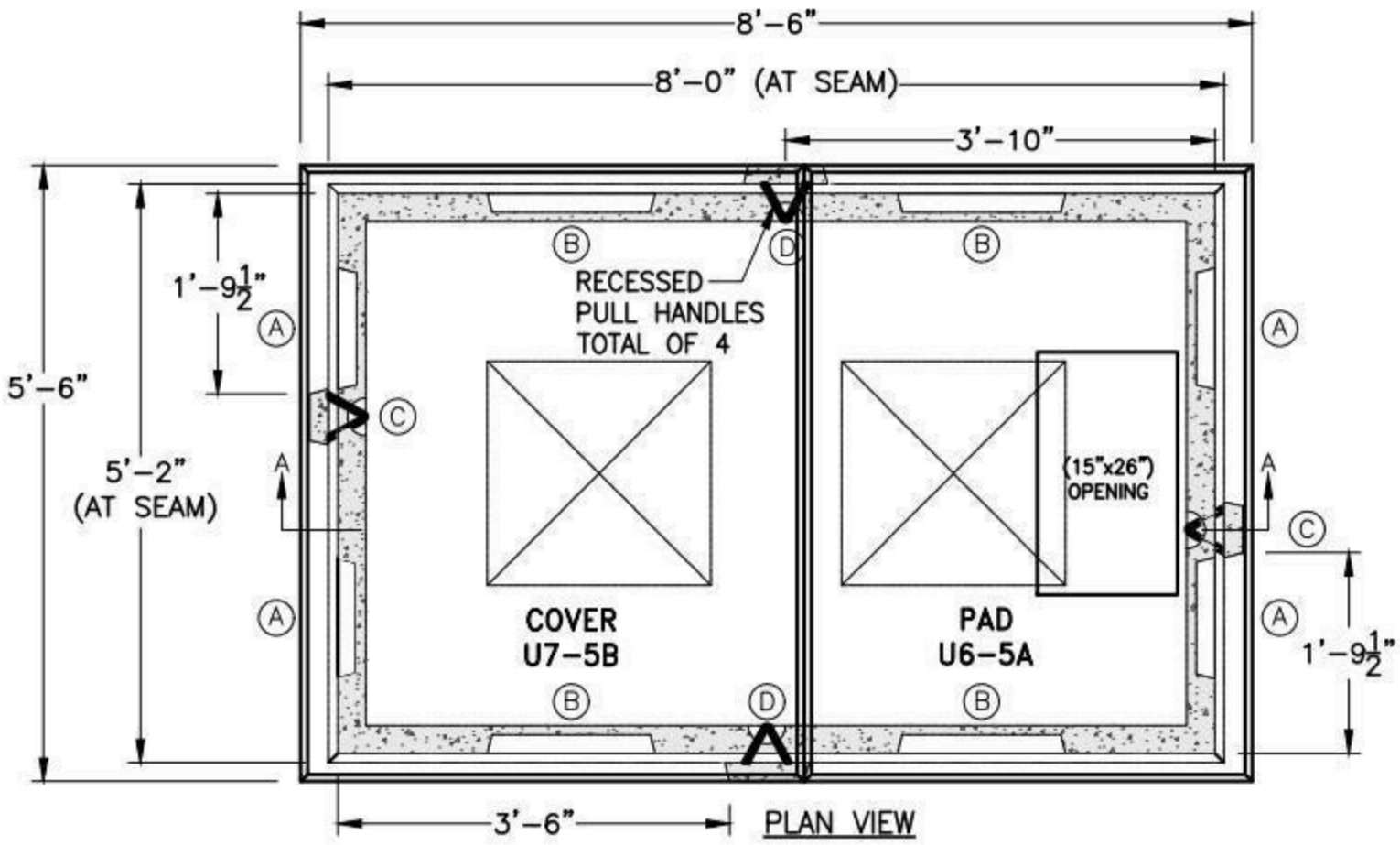

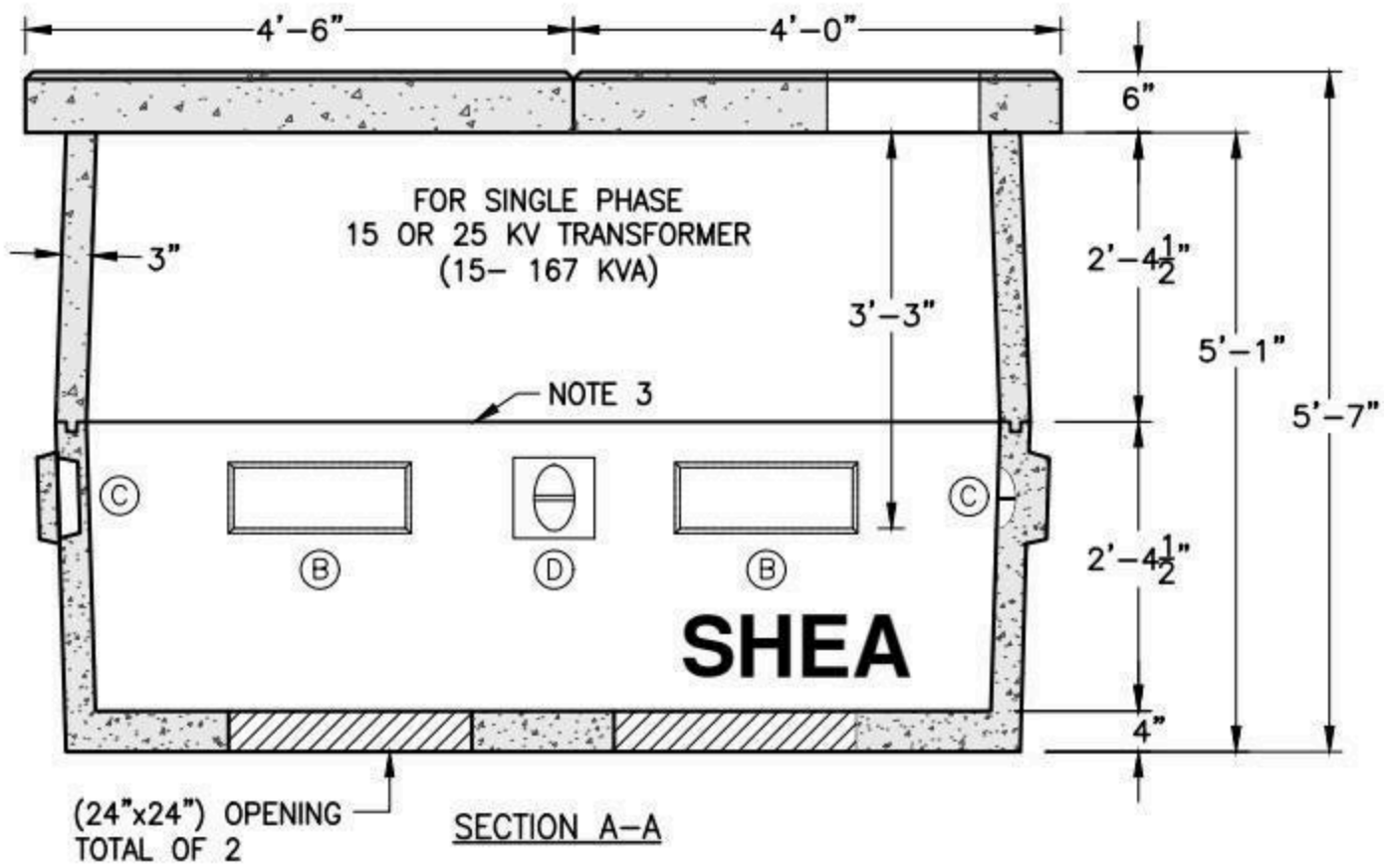

EST WEIGHT:

COVER:	1,840 LBS
PAD:	1,430 LBS
RISER:	2,375 LBS
BASE:	4,300 LBS
TOTAL:	9,945 LBS

GENERAL NOTES:
1. CONCRETE: 5,000 PSI MIN. AFTER 28 DAYS
2. REINFORCING STEEL: ASTM A-615 GRADE 60
3. BUTYL JOINT SEALANT PROVIDED
4. CONFORMS TO NHEC SPECIFICATION
5. TOP OF VAULT SHALL BE 4"-6" ABOVE FINISH GRADE
6. VAULT IS FOR MULTIPLE RESIDENCE APPLICATIONS
7. VAULT IS FOR NON-TRAFFIC APPLICATIONS

KNOCKOUTS				BUMP-OUTS			
MARK:	QTY:	DIM:	PLACE:	MARK:	QTY:	DIM:	PLACE:
(A)	(4)	(6"x12"x2")	EA. END	(C)	(2)	(5"x8"x2")	EA. END
(B)	(4)	(6"x17"x2")	EA. SIDE	(D)	(2)	(8"x8"x2")	EA. SIDE

SHEA PRODUCT ID: NHEC-U551PTRANS	FILE NAME: U5-5 SINGLE PHASE TRANS.dwg		
WEIGHT (LBS): 9,945#	DRAWN BY: NMB	DATE: 06/22/2015	PAGE: V.A.5

NPCA CERTIFIED PLANT

Specifications subject to change without notice

SHEA CONCRETE PRODUCTS
New England's Premier Precaster
800-696-7432 (SHEA)
www.sheaconcrete.com
MAILING ADDRESS: 87 HAVERHILL RD AMESBURY, MA 01913

NH CO-OP U5-5 THREE PHASE 7.2 KV SECTIONALIZER VAULT – 48"

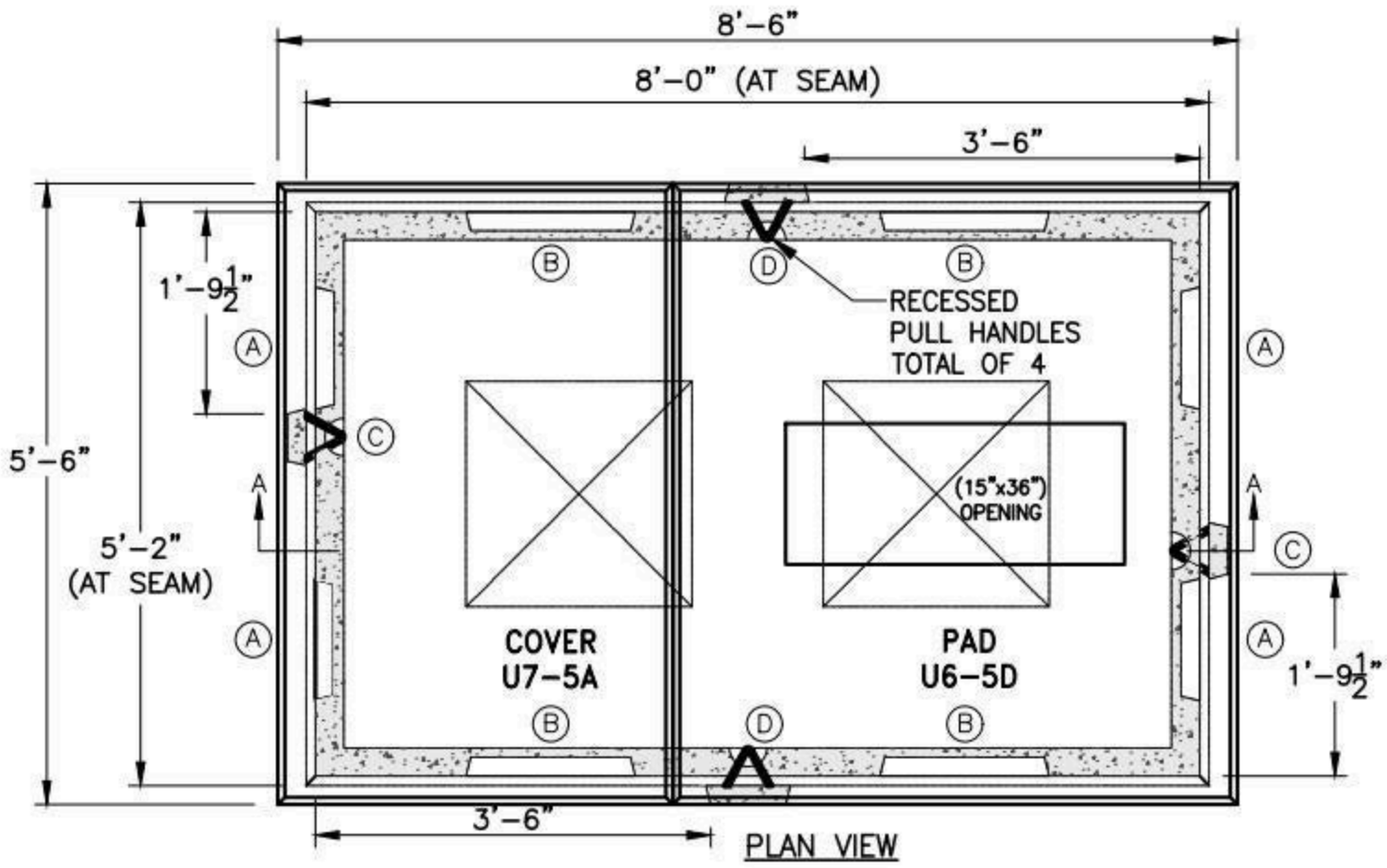

PLAN VIEW

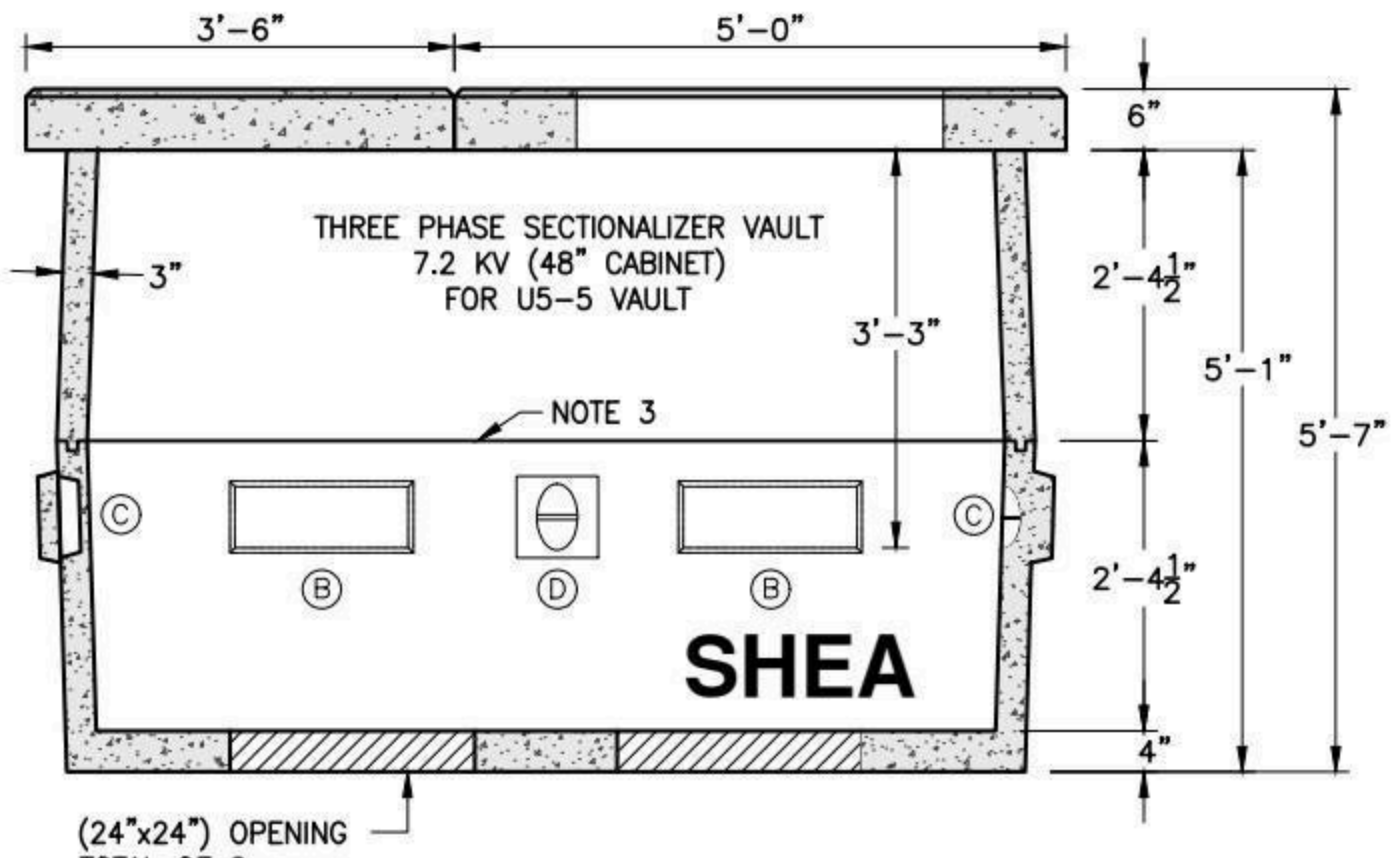

SECTION A–A

EST WEIGHT:

COVER:	1,425 LBS
PAD:	1,760 LBS
RISER:	2,375 LBS
BASE:	4,300 LBS
TOTAL:	9,860 LBS

GENERAL NOTES:
1. CONCRETE: 5,000 PSI MIN. AFTER 28 DAYS
2. REINFORCING STEEL: ASTM A-615 GRADE 60
3. BUTYL JOINT SEALANT PROVIDED
4. CONFORMS TO NHEC SPECIFICATION
5. TOP OF VAULT SHALL BE 4"-6" ABOVE FINISH GRADE
6. VAULT IS FOR NON-TRAFFIC APPLICATIONS

KNOCKOUTS				BUMP-OUTS			
MARK:	QTY:	DIM:	PLACE:	MARK:	QTY:	DIM:	PLACE:
(A)	(4)	(6"x12"x2")	EA. END	(C)	(2)	(5"x8"x2")	EA. END
(B)	(4)	(6"x17"x2")	EA. SIDE	(D)	(2)	(8"x8"x2")	EA. SIDE

SHEA PRODUCT ID: NHEC-U553PSEC7	FILE NAME: U5-5 THREE PHASE SEC 48.dwg		
WEIGHT (LBS): 9,860#	DRAWN BY: NMB	DATE: 06/22/2015	PAGE: V.A.6

NPCA CERTIFIED PLANT

Specifications subject to change without notice

SHEA CONCRETE PRODUCTS
New England's Premier Precaster
800-696-7432 (SHEA)
www.sheaconcrete.com
MAILING ADDRESS: 87 HAVERHILL RD AMESBURY, MA 01913

NH CO-OP U5-5 THREE PHASE 14.2 KV SECTIONALIZING CAB – 66"

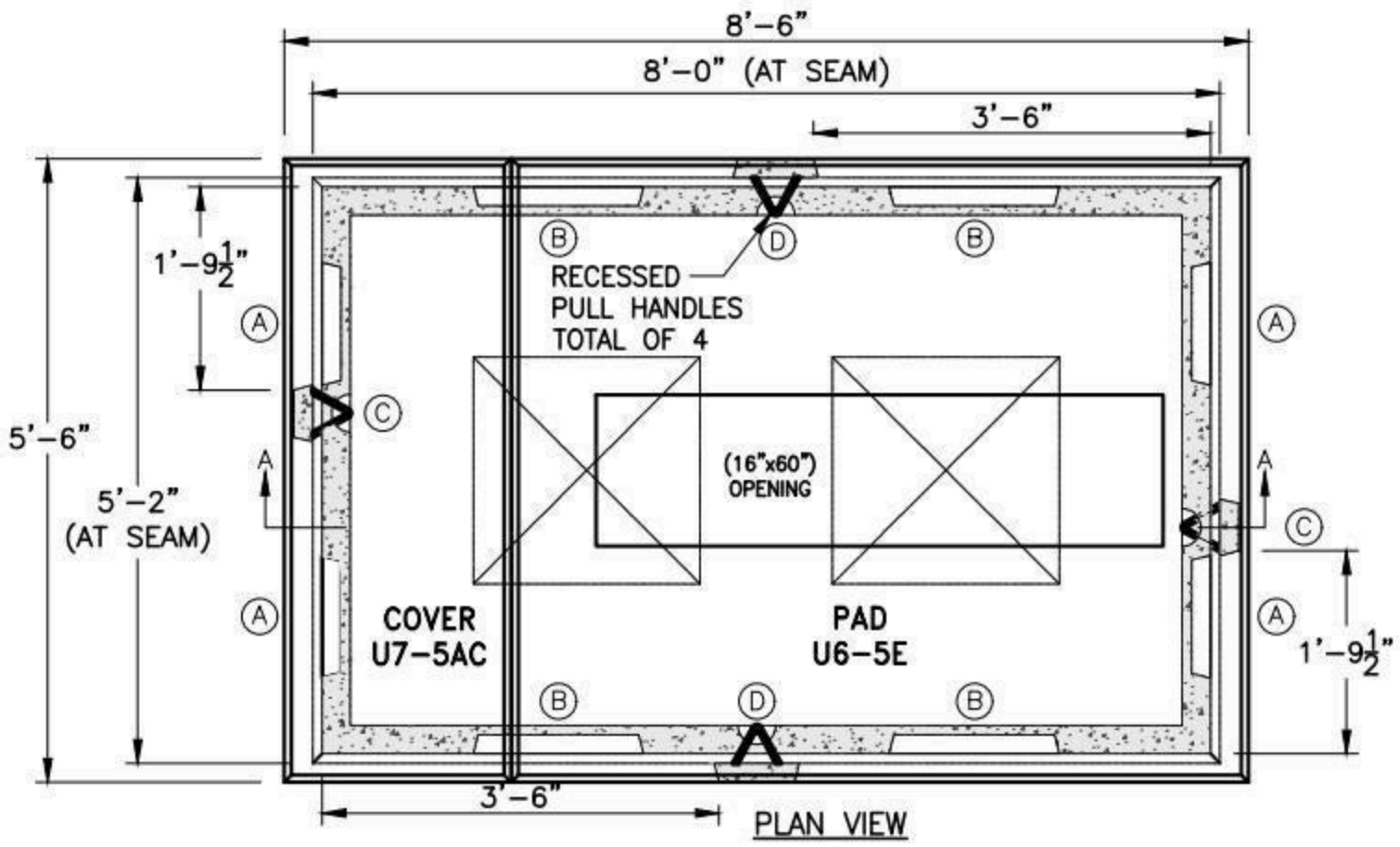

PLAN VIEW

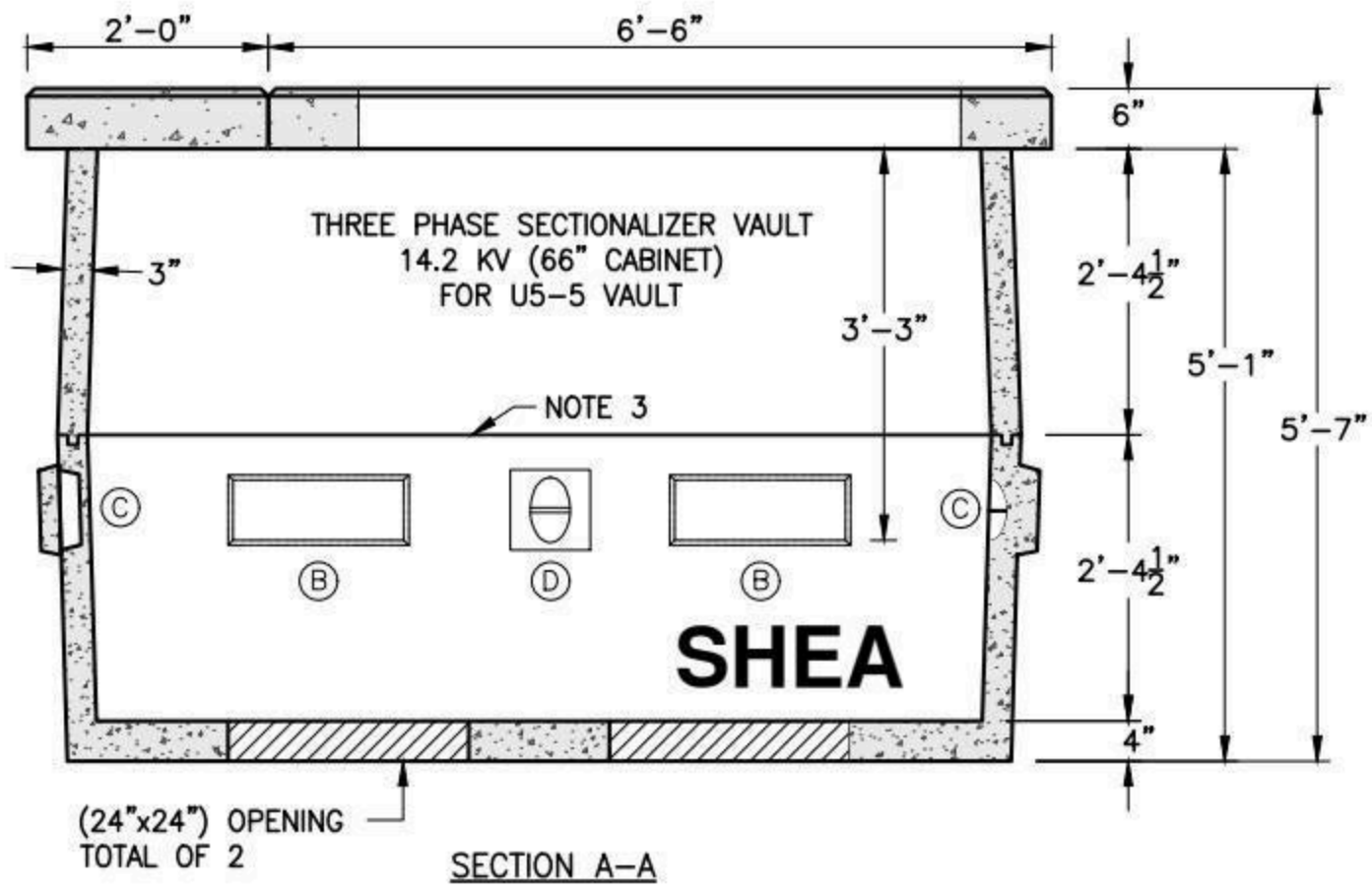

SECTION A–A

EST WEIGHT:

COVER:	815 LBS
PAD:	2,160 LBS
RISER:	2,375 LBS
BASE:	4,300 LBS
TOTAL:	9,650 LBS

GENERAL NOTES:
1. CONCRETE: 5,000 PSI MIN. AFTER 28 DAYS
2. REINFORCING STEEL: ASTM A-615 GRADE 60
3. BUTYL JOINT SEALANT PROVIDED
4. CONFORMS TO NHEC SPECIFICATION
5. TOP OF VAULT SHALL BE 4"-6" ABOVE FINISH GRADE
6. VAULT IS FOR NON-TRAFFIC APPLICATIONS

KNOCKOUTS				BUMP-OUTS			
MARK:	QTY:	DIM:	PLACE:	MARK:	QTY:	DIM:	PLACE:
(A)	(4)	(6"x12"x2")	EA. END	(C)	(2)	(5"x8"x2")	EA. END
(B)	(4)	(6"x17"x2")	EA. SIDE	(D)	(2)	(8"x8"x2")	EA. SIDE

SHEA PRODUCT ID: NHEC-U553PSEC14	FILE NAME: U5-5 THREE PHASE SEC 66.dwg		
WEIGHT (LBS): 9,650#	DRAWN BY: NMB	DATE: 06/22/2015	PAGE: V.A.7

Specifications subject to change without notice

SHEA CONCRETE PRODUCTS
New England's Premier Precaster
800-696-7432 (SHEA)
www.sheaconcrete.com
MAILING ADDRESS: 87 HAVERHILL RD AMESBURY, MA 01913

NH CO-OP U5-5 THREE PHASE 7.2 KV SEC VAULT – PLYMOUTH 48"

SPECIAL ORDER
PLYMOUTH AREA

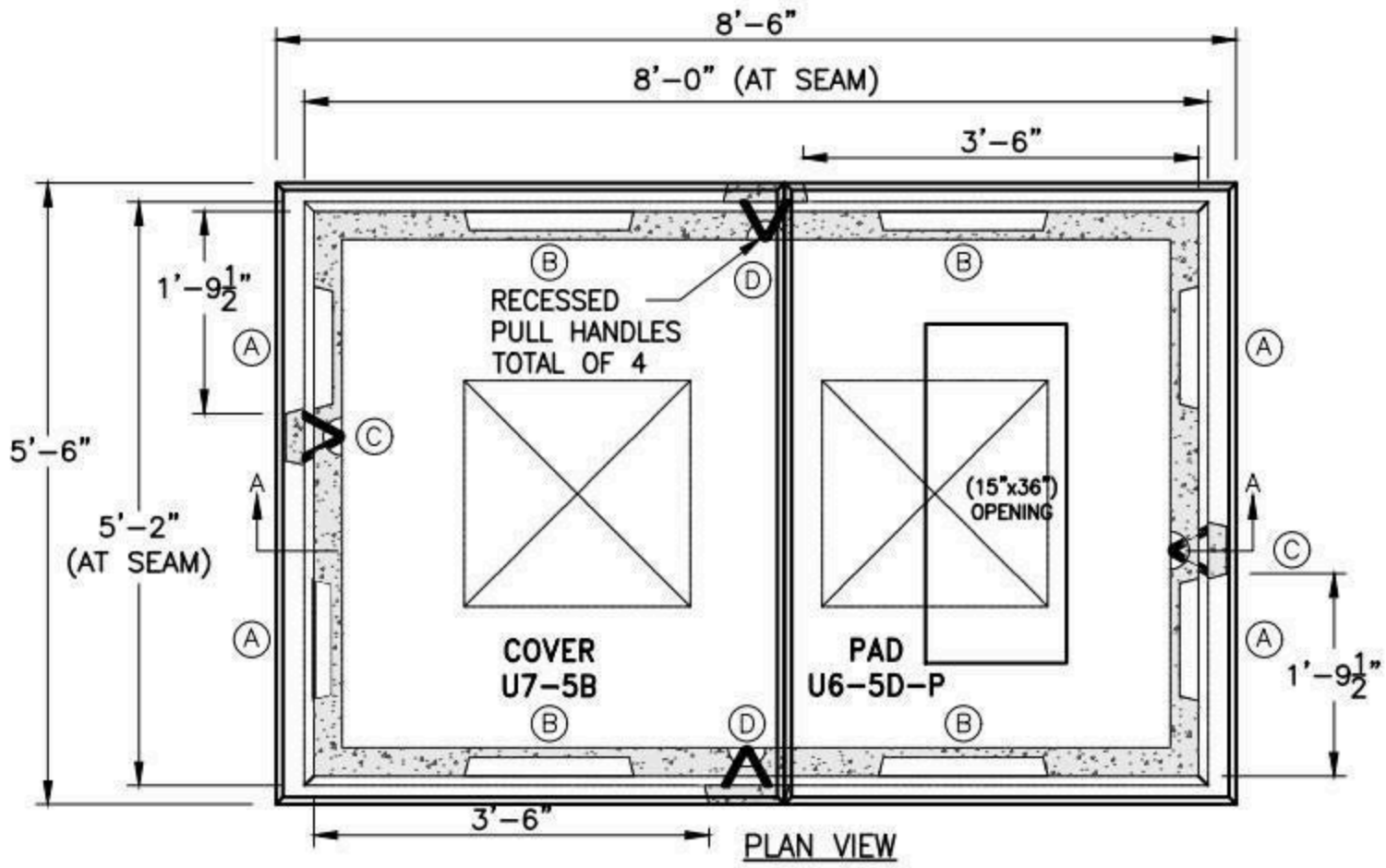

PLAN VIEW

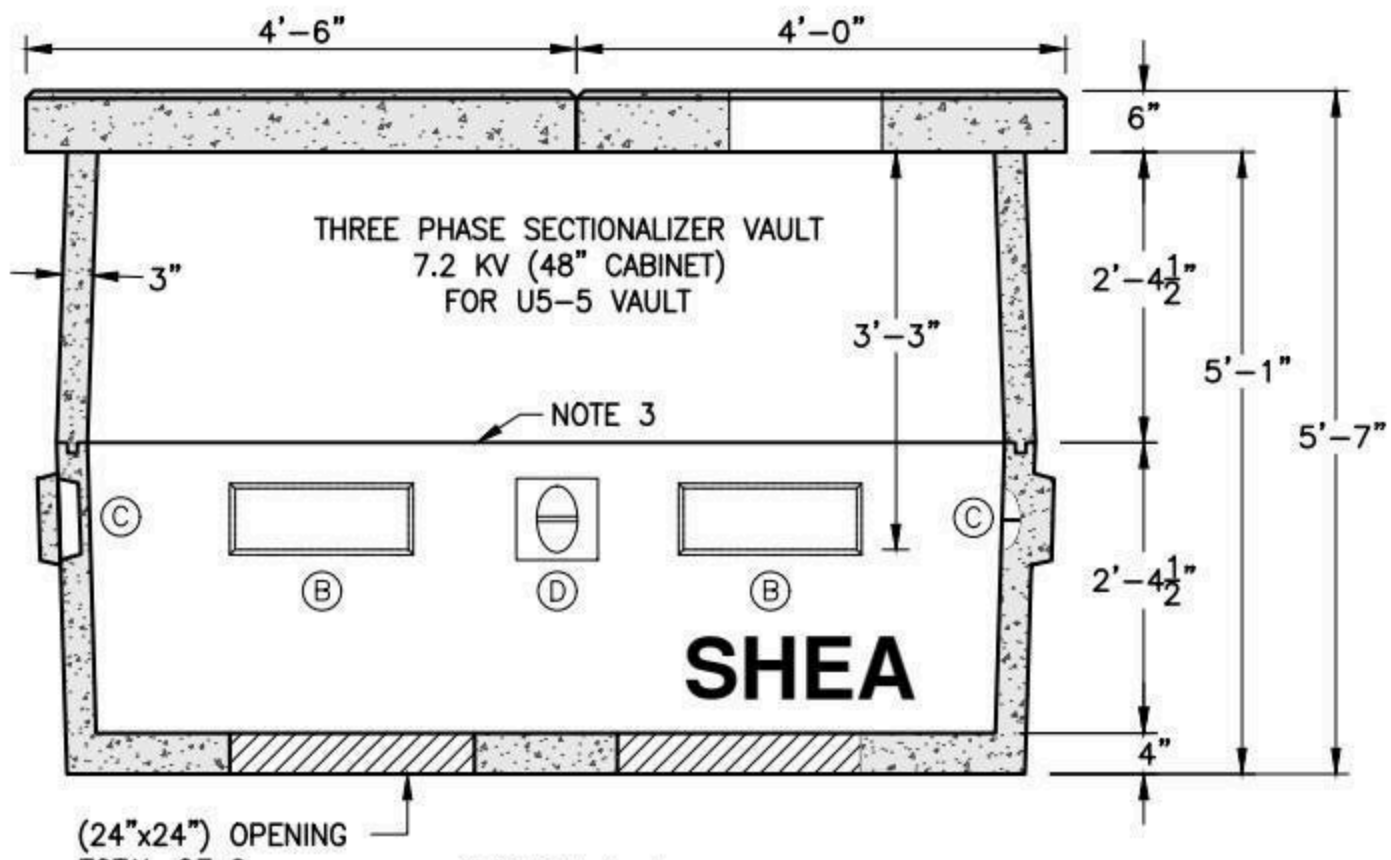

SECTION A-A

EST WEIGHT:

COVER:	1,840 LBS
PAD:	1,350 LBS
RISER:	2,375 LBS
BASE:	4,300 LBS
TOTAL:	9,865 LBS

GENERAL NOTES:
1. CONCRETE: 5,000 PSI MIN. AFTER 28 DAYS
2. REINFORCING STEEL: ASTM A-615 GRADE 60
3. BUTYL JOINT SEALANT PROVIDED
4. CONFORMS TO NHEC SPECIFICATION
5. TOP OF VAULT SHALL BE 4"-6" ABOVE FINISH GRADE
6. VAULT IS FOR NON-TRAFFIC APPLICATIONS

KNOCKOUTS				BUMP-OUTS			
MARK:	QTY:	DIM:	PLACE:	MARK:	QTY:	DIM:	PLACE:
(A)	(4)	(6"x12"x2")	EA. END	(C)	(2)	(5"x8"x2")	EA. END
(B)	(4)	(6"x17"x2")	EA. SIDE	(D)	(2)	(8"x8"x2")	EA. SIDE

SHEA PRODUCT ID: NHEC-U553PSEC7PLY	FILE NAME: U5-5 THREE PHASE SEC 48 PLY.dwg		
WEIGHT (LBS): 9,865#	DRAWN BY: NMB	DATE: 06/22/2015	PAGE: V.A.8

NPCA CERTIFIED PLANT

Specifications subject to change without notice

SHEA CONCRETE PRODUCTS
New England's Premier Precaster
800-696-7432 (SHEA)
www.sheaconcrete.com
MAILING ADDRESS: 87 HAVERHILL RD AMESBURY, MA 01913

NH CO-OP U5-7 THREE PHASE TRANSFORMER VAULT

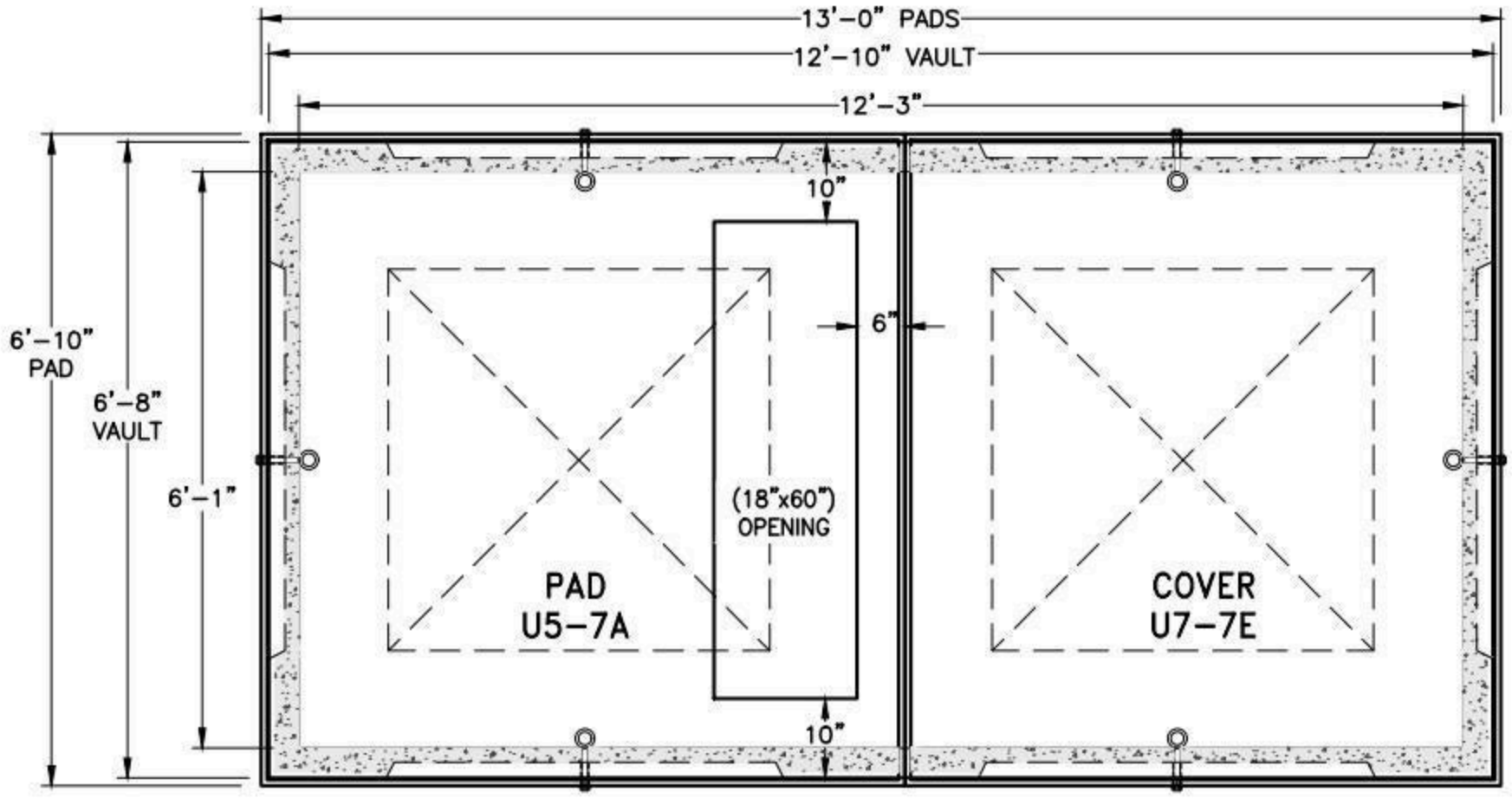

PLAN VIEW

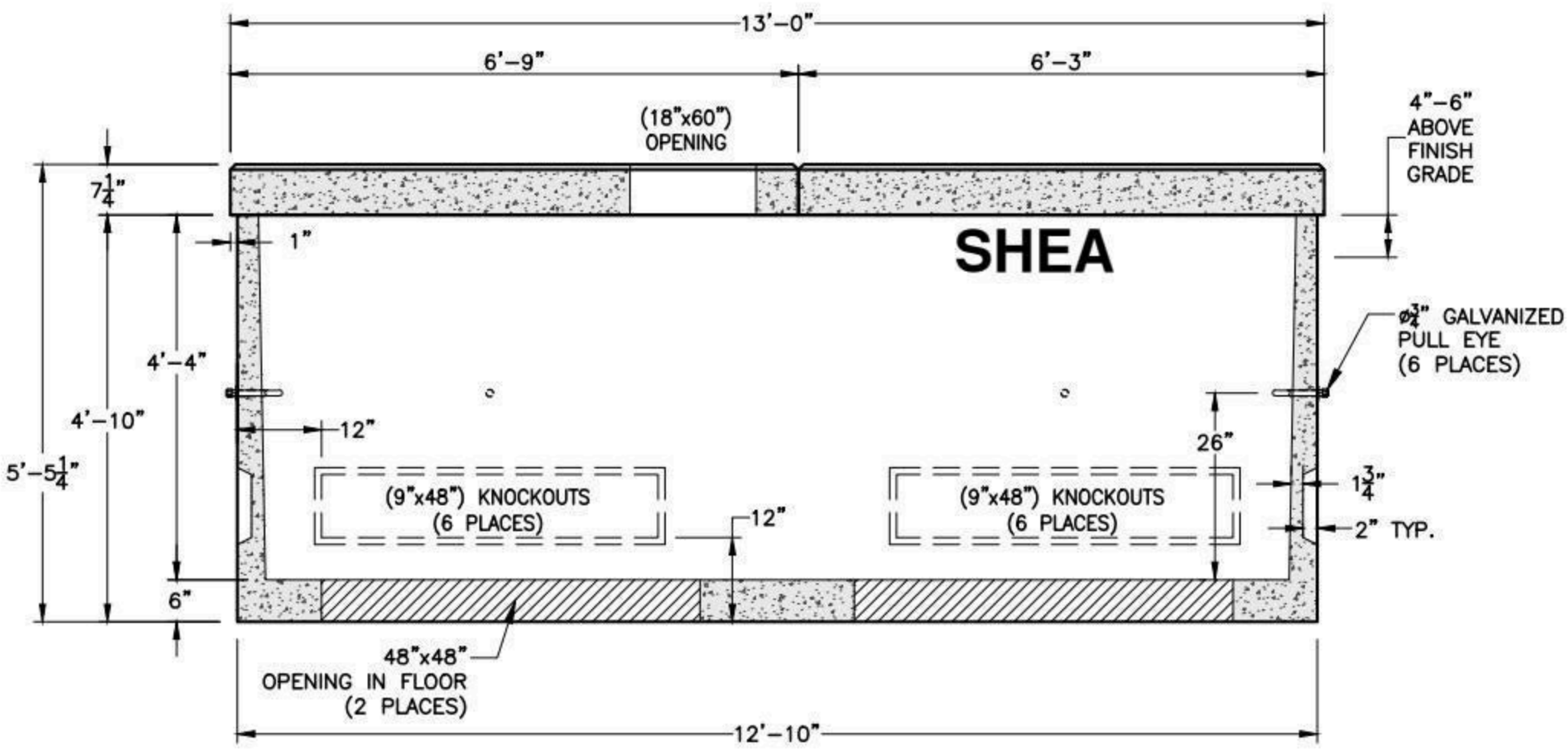

SECTION A-A

GENERAL NOTES:

1. CONCRETE: 5,000 PSI MIN. AFTER 28 DAYS
2. REINFORCING STEEL: ASTM A-615 GRADE 60
3. CONFORMS TO NHEC SPECIFICATION
4. TOP OF VAULT SHALL BE 4"-6" ABOVE FINISH GRADE
5. VAULT IS FOR NON-TRAFFIC APPLICATIONS

EST WEIGHT:

PAD:	3,800 LBS
COVER:	3,560 LBS
BASE:	11,100 LBS
TOTAL:	18,460 LBS

SHEA PRODUCT ID:	NHEC-U57T	FILE NAME:	U5-7 THREE PHASE TRANS.dwg		
WEIGHT (LBS):	18,460#	DRAWN BY:	NMB	DATE: 11/02/2016	PAGE: V.A.9

NPCA CERTIFIED PLANT

Specifications subject to change without notice

SHEA CONCRETE PRODUCTS
New England's Premier Precaster
800-696-7432 (SHEA)
www.sheaconcrete.com
MAILING ADDRESS: 87 HAVERHILL RD AMESBURY, MA 01913

NH CO-OP U5-7 THREE PHASE SECTIONALIZER VAULT

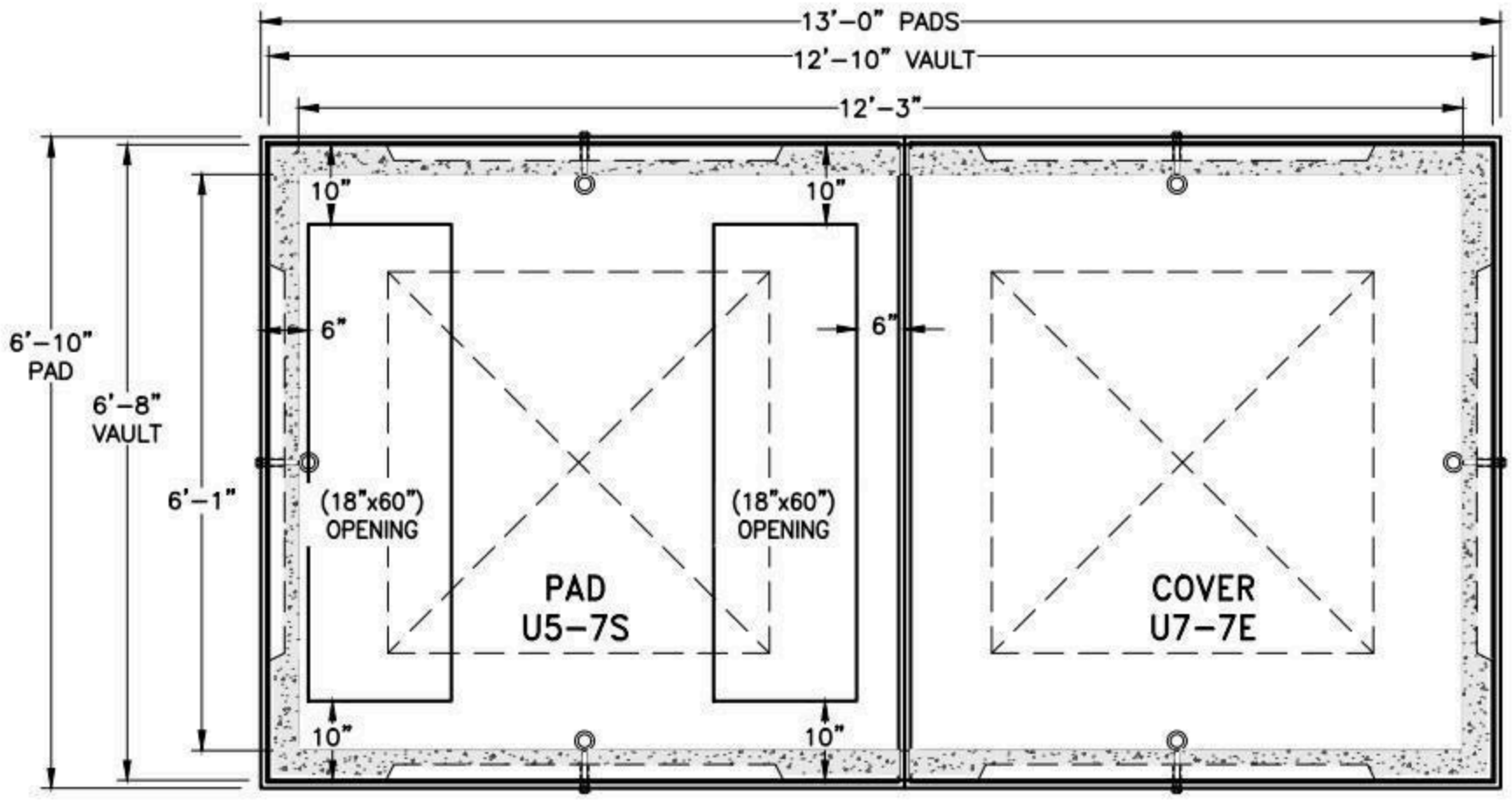

PLAN VIEW

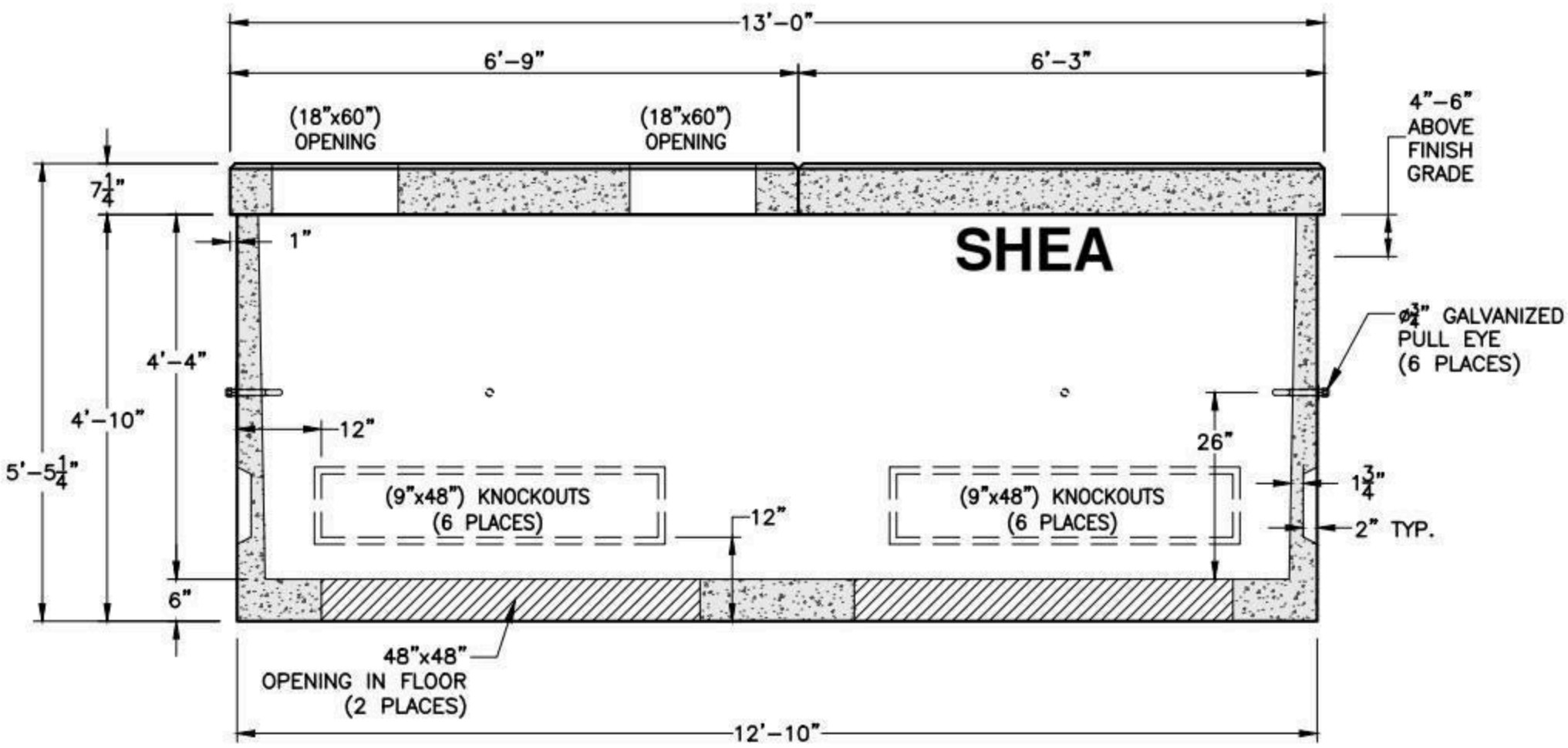

GENERAL NOTES:

1. CONCRETE: 5,000 PSI MIN. AFTER 28 DAYS
2. REINFORCING STEEL: ASTM A-615 GRADE 60
3. CONFORMS TO NHEC SPECIFICATION
4. TOP OF VAULT SHALL BE 4"-6" ABOVE FINISH GRADE
5. VAULT IS FOR NON-TRAFFIC APPLICATIONS

EST WEIGHT:

PAD:	3,800 LBS
COVER:	3,560 LBS
BASE:	11,100 LBS
TOTAL:	18,460 LBS

SHEA PRODUCT ID:	NHEC-U57S	FILE NAME:	U5-7 THREE PHASE SEC VAULT.dwg		
WEIGHT (LBS):	18,460#	DRAWN BY:	NMB	DATE: 10/26/2016	PAGE: V.A.10

NPCA CERTIFIED PLANT

773 Salem Street-Wilmington, MA | 153 Cranberry Hwy-Rochester, MA | 87 Haverhill Road-Amesbury, MA | 160 Old Turnpike Rd-Nottingham, NH

Specifications subject to change without notice

SHEA CONCRETE PRODUCTS
New England's Premier Precaster
800-696-7432 (SHEA)
www.sheaconcrete.com
MAILING ADDRESS: 87 HAVERHILL RD AMESBURY, MA 01913

NH CO-OP U5-6B UNDERWATER CABLE COVER

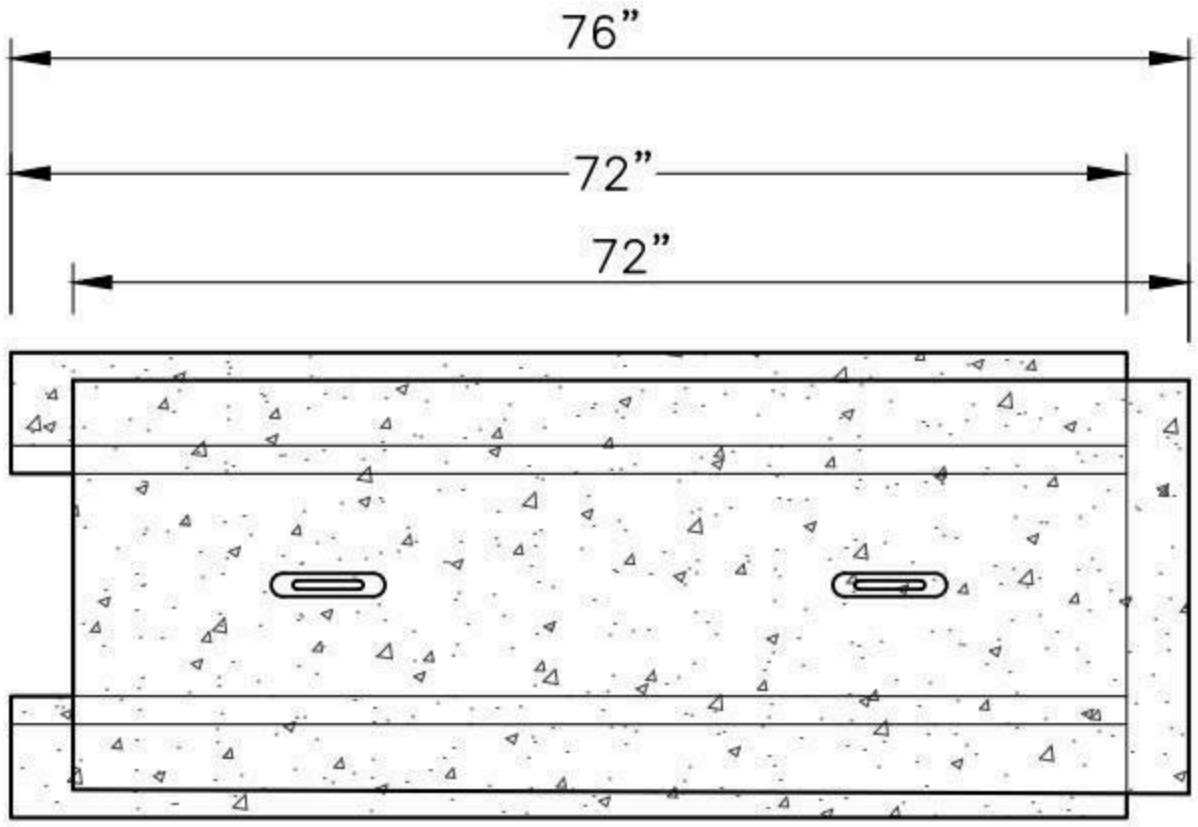

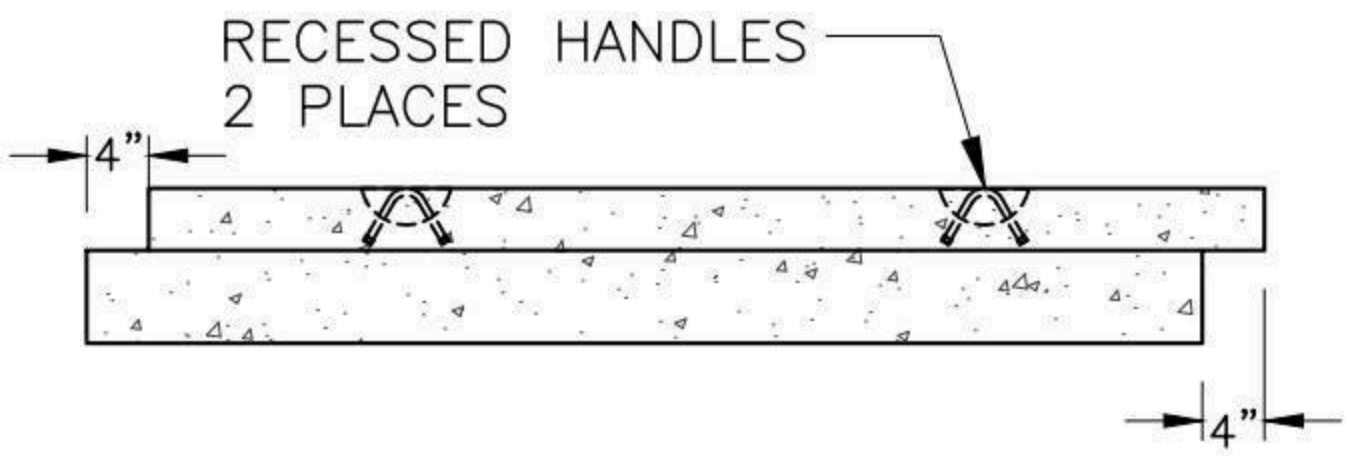

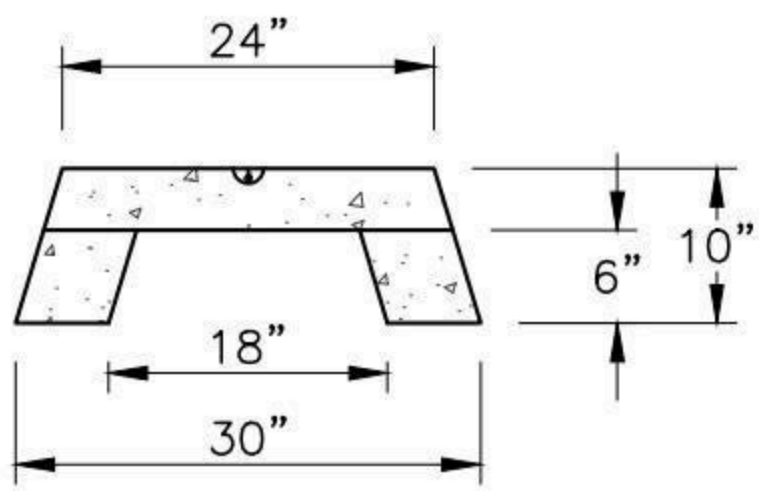

GENERAL NOTES:

1. REINFORCEMENT STEEL CONFORMS TO: ASTM A185
2. CONCRETE: FC = 5,000 PSI @ 28 DAYS MINIMUM

SHEA PRODUCT ID: U7-6B	FILE NAME: U7-6B Underwater Cable Cover.dwg		
WEIGHT (LBS): 2,110#	DRAWN BY: MNN	DATE: 12/28/2017	PAGE: V.A.11

NPCA CERTIFIED PLANT

773 Salem Street-Wilmington, MA | 153 Cranberry Hwy-Rochester, MA | 87 Haverhill Road-Amesbury, MA | 160 Old Turnpike Rd-Nottingham, NH

Specifications subject to change without notice

SHEA CONCRETE PRODUCTS
New England's Premier Precaster
800-696-7432 (SHEA)
www.sheaconcrete.com
MAILING ADDRESS: 87 HAVERHILL RD AMESBURY, MA 01913

LIBERTY UTILITIES LU-MS3334 HANDHOLE

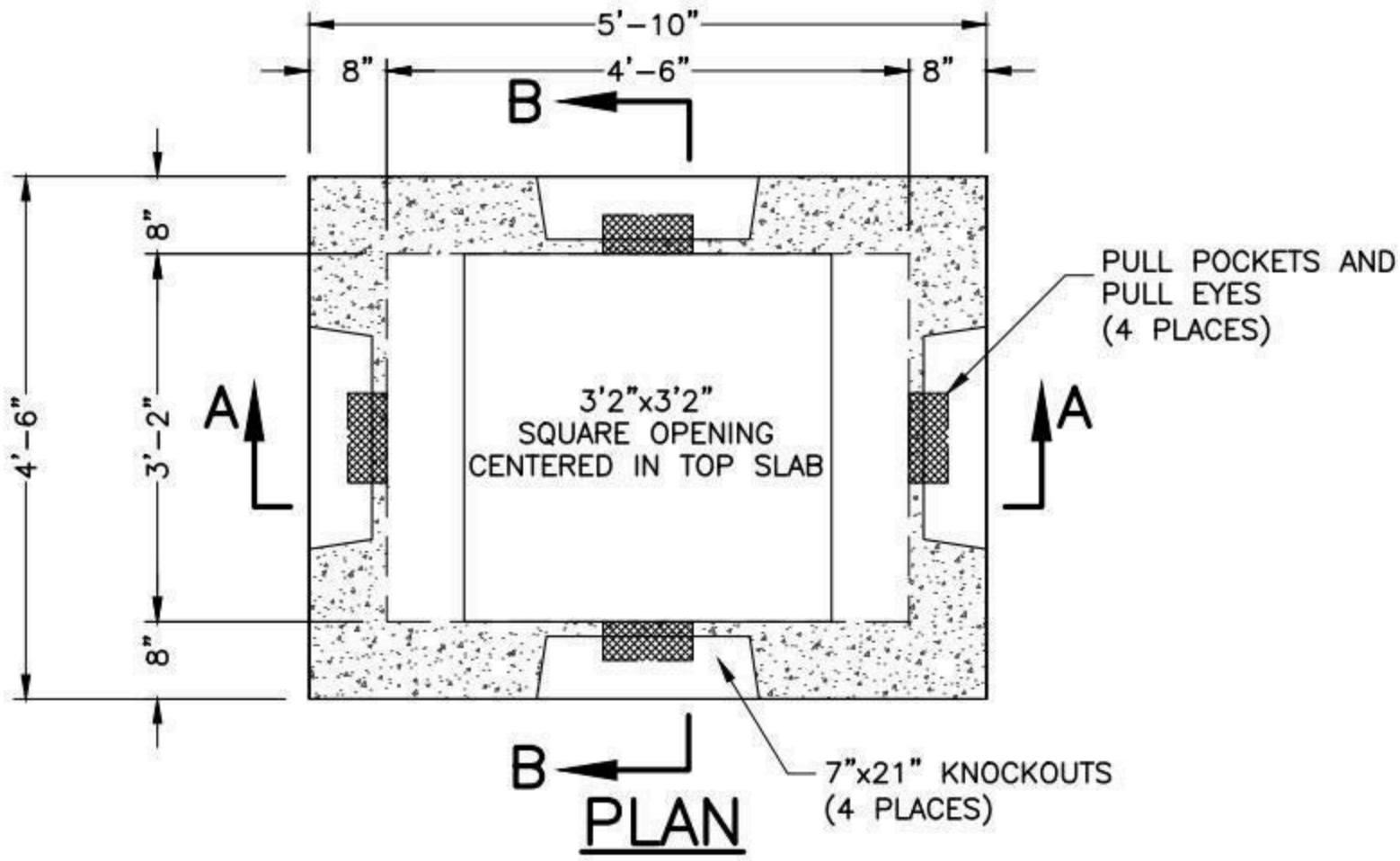

PLAN

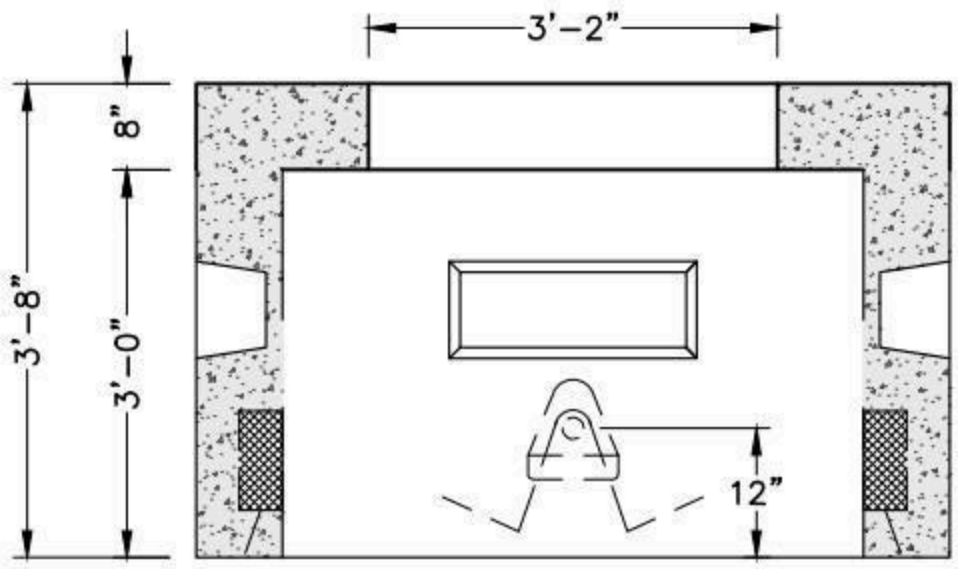

SECTION A-A

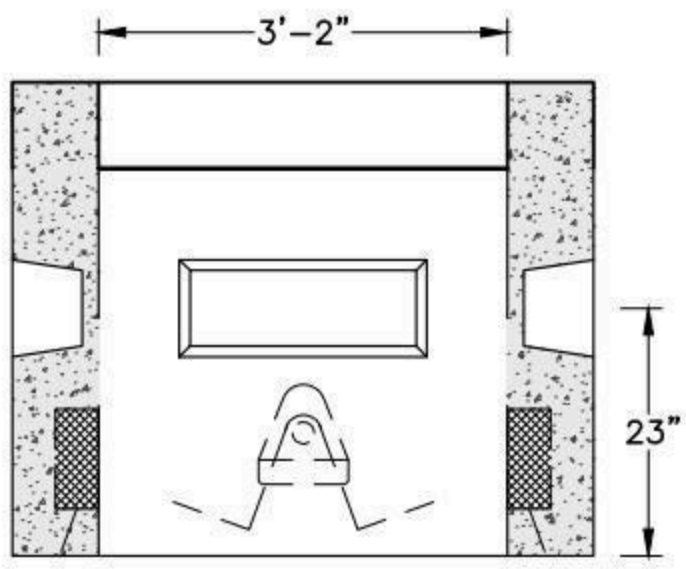

SECTION B-B

NOTES:
1. CONCRETE MINIMUM STRENGTH 4,000 PSI AFTER 28 DAYS.
2. STEEL REINFORCEMENT CONFORMS TO LATEST ASTM SPECIFICATION: ASTM A-615 GRADE #60
3. DESIGNED FOR H-20 LOADING.
4. BUTYL RESIN JOINT CONFORMS TO LATEST ASTM C443 SPEC.

SHEA PRODUCT ID: LUMS-HANDHOLE	FILE NAME: LU-MS3334_HH_SQOPEN.dwg		
WEIGHT (LBS): 7,000#	DRAWN BY: NMB	DATE: 05/25/18	PAGE: VI.A.1

NPCA CERTIFIED PLANT

773 Salem Street-Wilmington, MA | 153 Cranberry Hwy-Rochester, MA | 87 Haverhill Road-Amesbury, MA | 160 Old Turnpike Rd-Nottingham, NH

Specifications subject to change without notice

SHEA CONCRETE PRODUCTS
New England's Premier Precaster
800-696-7432 (SHEA)
www.sheaconcrete.com
MAILING ADDRESS: 87 HAVERHILL RD AMESBURY, MA 01913

LIBERTY UTILITIES LU-MS3462 2-WAY DISTRIBUTION MANHOLE

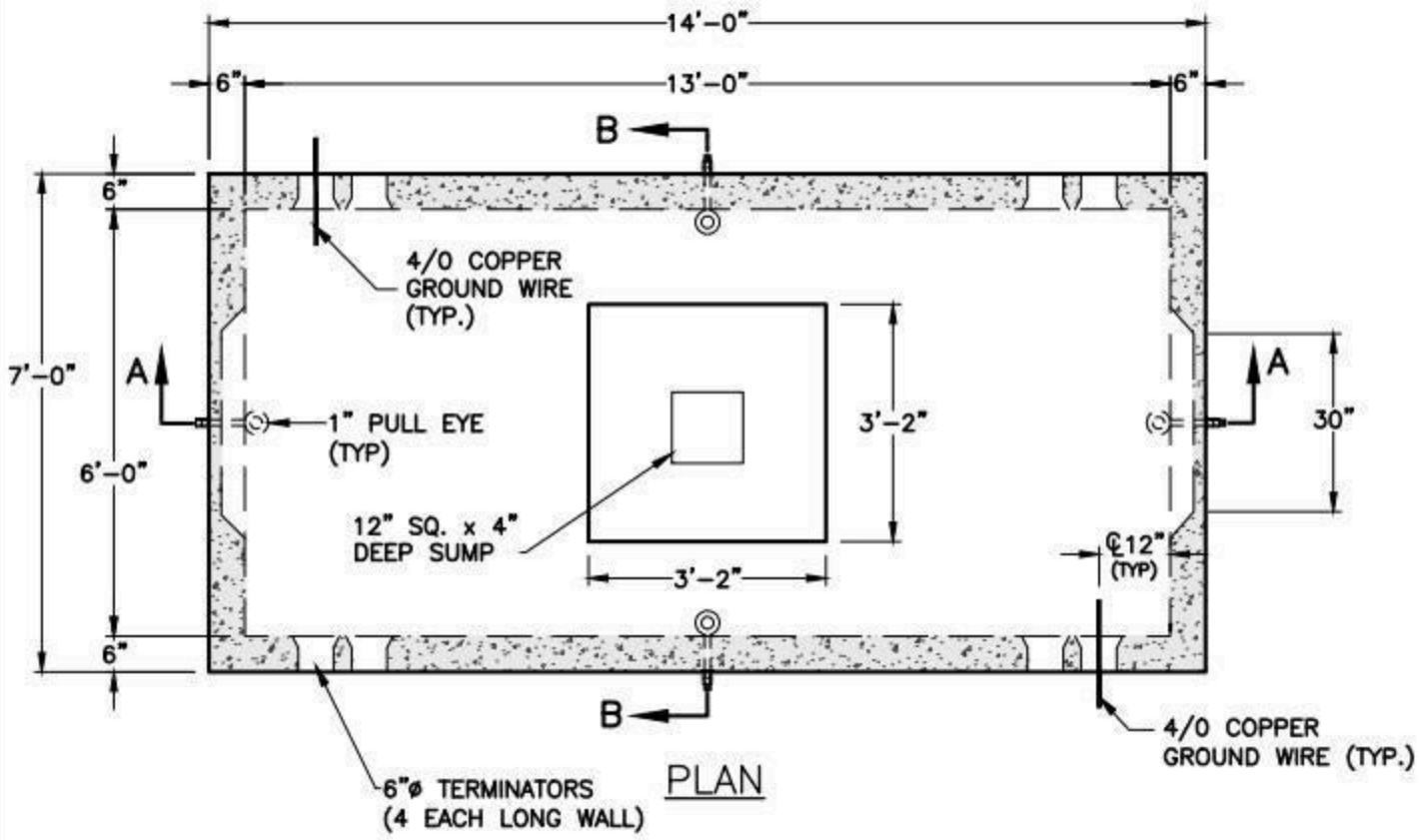

PLAN

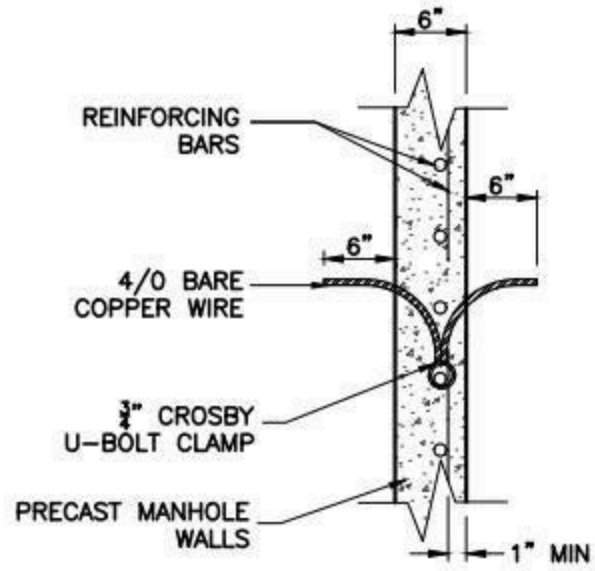

COPPER GROUND WIRE DETAIL

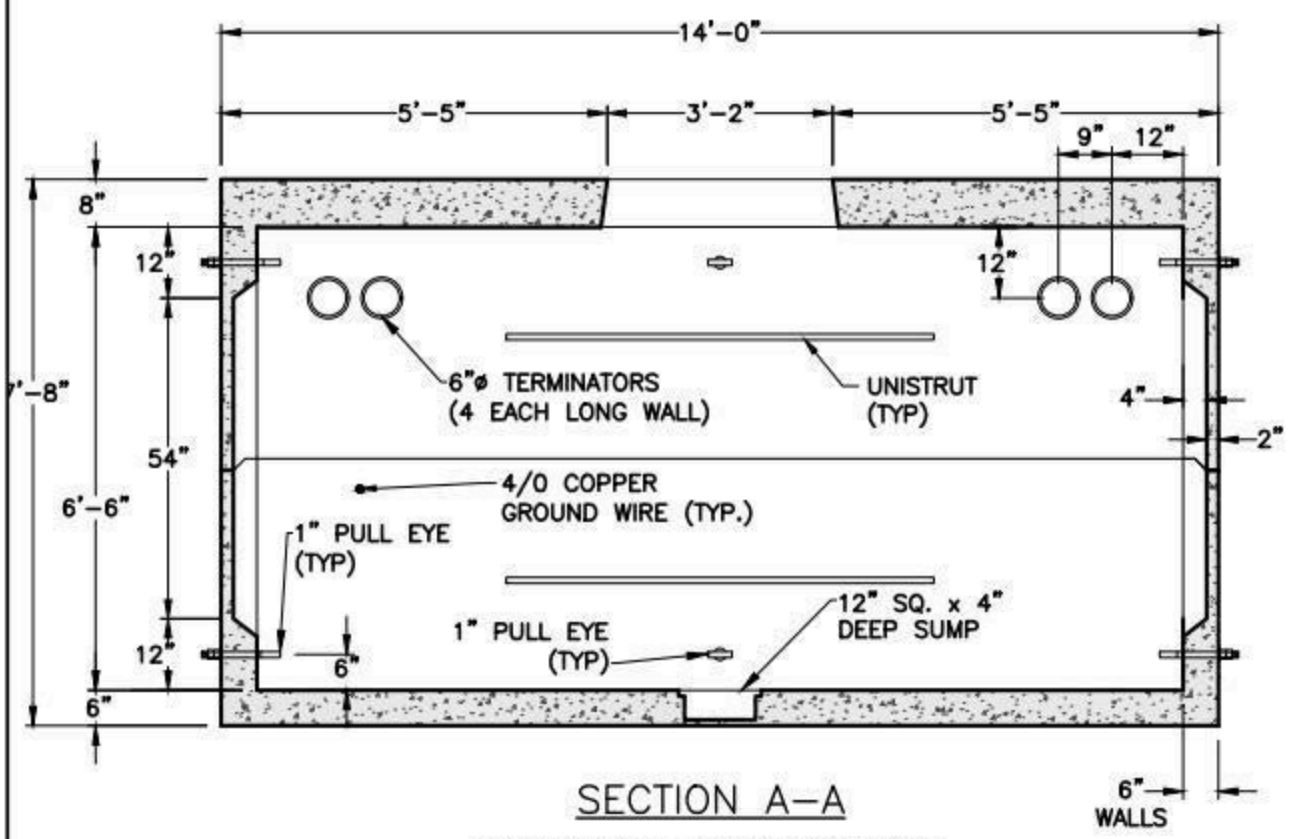

SECTION A-A

OPPOSITE WALLS ARE MIRROR IMAGES.

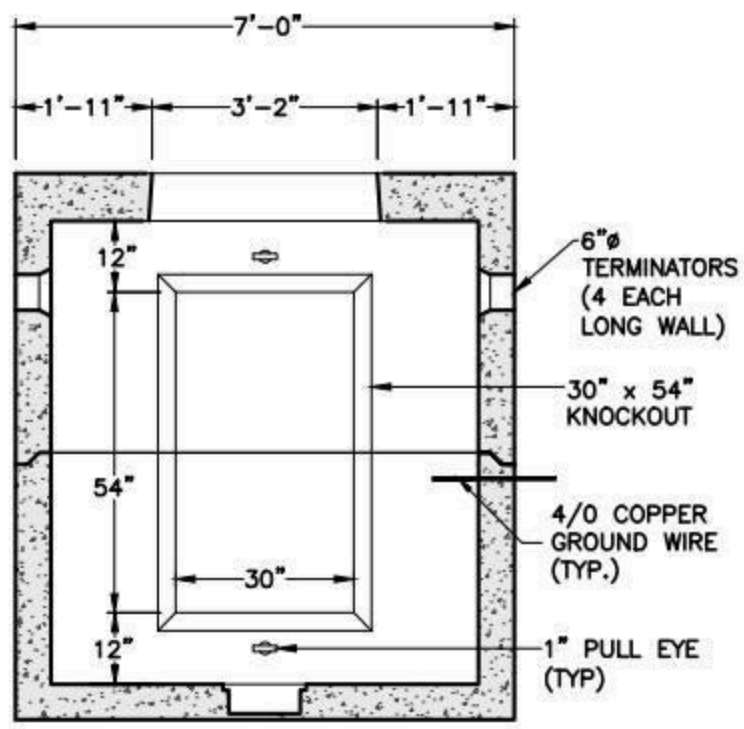

SECTION B-B

OPPOSITE WALLS ARE MIRROR IMAGES.

NOTES

1. CONCRETE MINIMUM STRENGTH 5,000 PSI AFTER 28 DAYS.
2. STEEL REINFORCEMENT – ASTM A615, GRADE 60.
3. MINIMUM STEEL COVER – 1 INCH.
4. DESIGN LOADING – AASHTO HS20-44.
5. LIBERTY UTILITIES PRODUCT CODE 8830-9200889.

	WEIGHT
TOP SECTION	18,000#
BOTTOM SECTION	17,000#
TOTAL WEIGHT	35,000#

SHEA PRODUCT ID: LUMS-3462	FILE NAME: LU-MS3462_2WAY DIST MAN.dwg		
WEIGHT (LBS): 35,000#	DRAWN BY: NMB	DATE: 04/06/2018	PAGE: VI.B.1

NPCA CERTIFIED PLANT

Specifications subject to change without notice

SHEA CONCRETE PRODUCTS
New England's Premier Precaster
800-696-7432 (SHEA)
www.sheaconcrete.com
MAILING ADDRESS: 87 HAVERHILL RD AMESBURY, MA 01913

LIBERTY UTILITIES LU-MS3464 3-WAY DISTRIBUTION MANHOLE

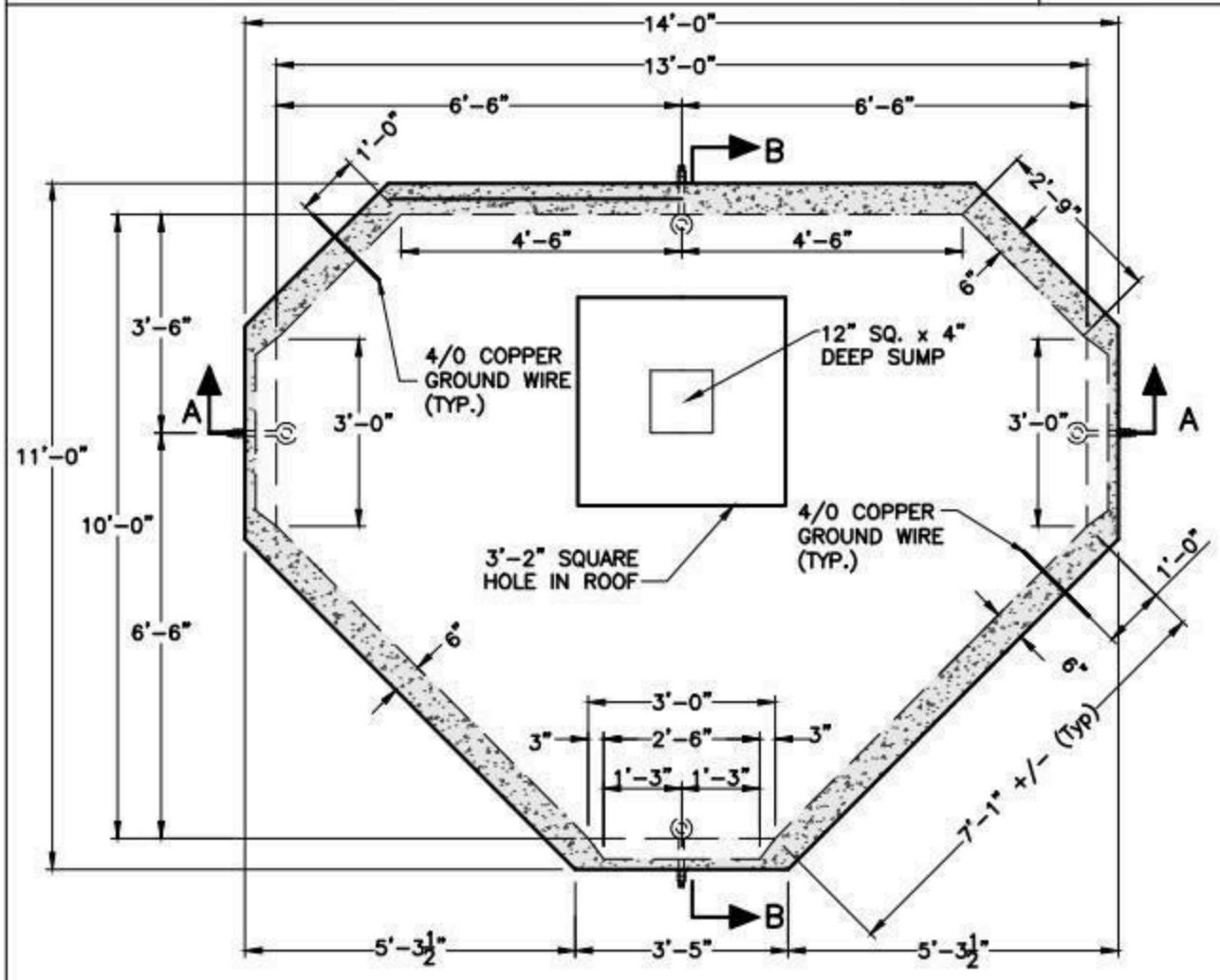

PLAN

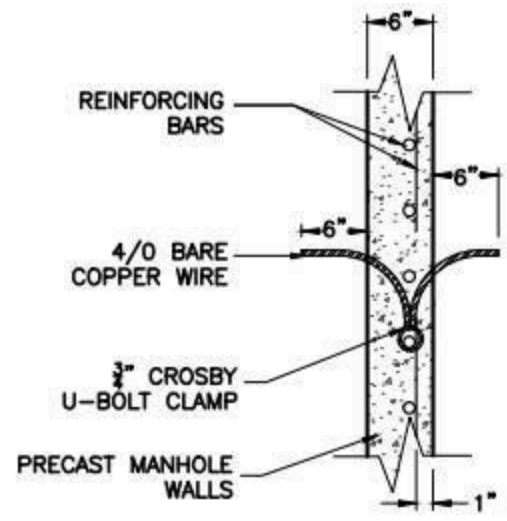

COPPER GROUND WIRE DETAIL

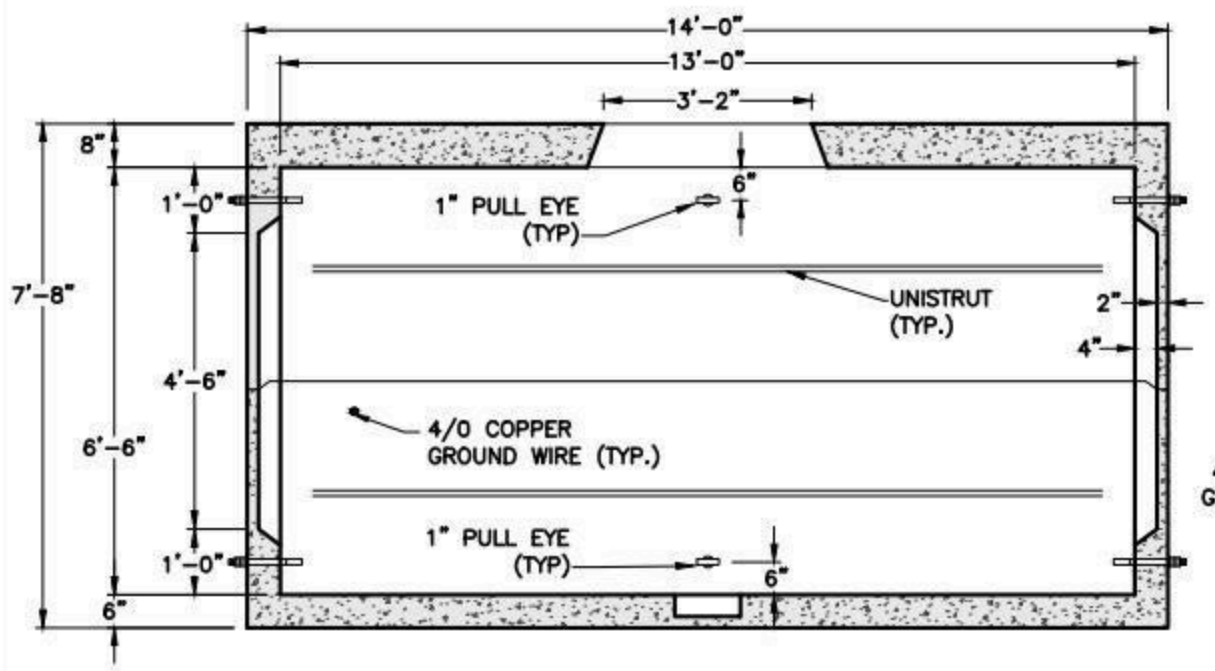

SECTION A-A

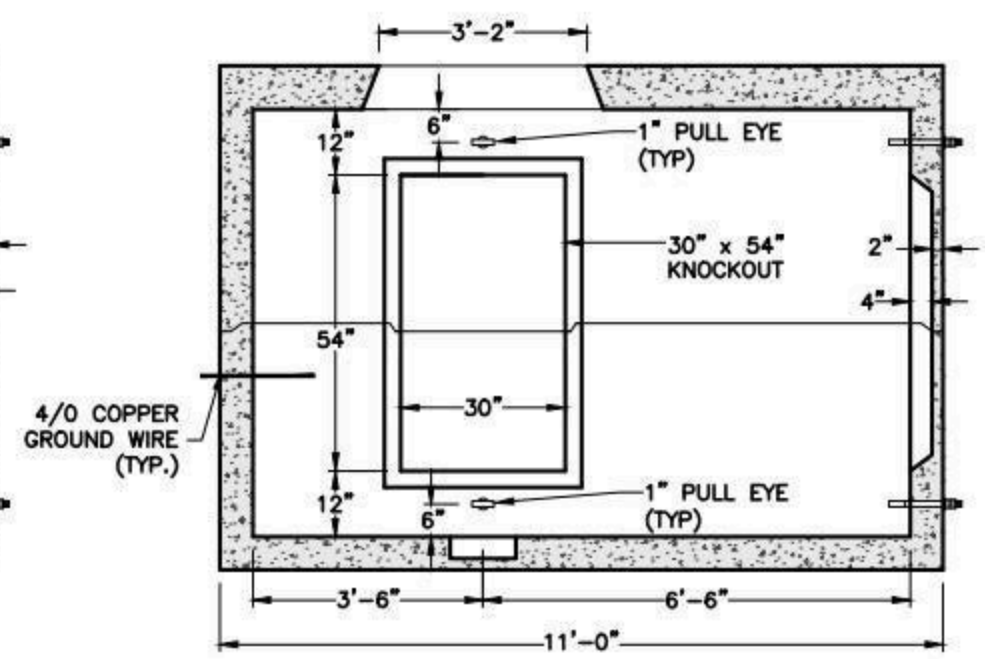

SECTION B-B

NOTES:

1. CONCRETE MINIMUM STRENGTH 5,000 PSI AFTER 28 DAYS.
2. STEEL REINFORCEMENT – ASTM A615, GRADE 60.
3. MINIMUM STEEL COVER – 1-1/2 INCH.
4. DESIGN LOADING – AASHTO HS20-44.
5. DESIGN SPECIFICATIONS – ACI 318 & AASHTO LOAD FACTOR DESIGN METHOD.
6. CONSTRUCTION JOINT – SEALED WITH 1" DIAMETER BUTYL RUBBER OR ACMELITE SEALANT.
7. TRIANGLE MANHOLE INSIDE DIMENSIONS: 10'-0"W x 13'-0"L x 6'-6"H.

SHEA PRODUCT ID: LUMS-3464	FILE NAME: LU-MS3464_3WAY DIST MAN.dwg		
WEIGHT (LBS): 38,500#	DRAWN BY: MNN	DATE: 02/27/18	PAGE: VI.B.2

NPCA CERTIFIED PLANT

Specifications subject to change without notice

SHEA CONCRETE PRODUCTS
New England's Premier Precaster
800-696-7432 (SHEA)
www.sheaconcrete.com
MAILING ADDRESS: 87 HAVERHILL RD AMESBURY, MA 01913

LIBERTY UTILITIES LU-MS3465 4-WAY DISTRIBUTION MANHOLE

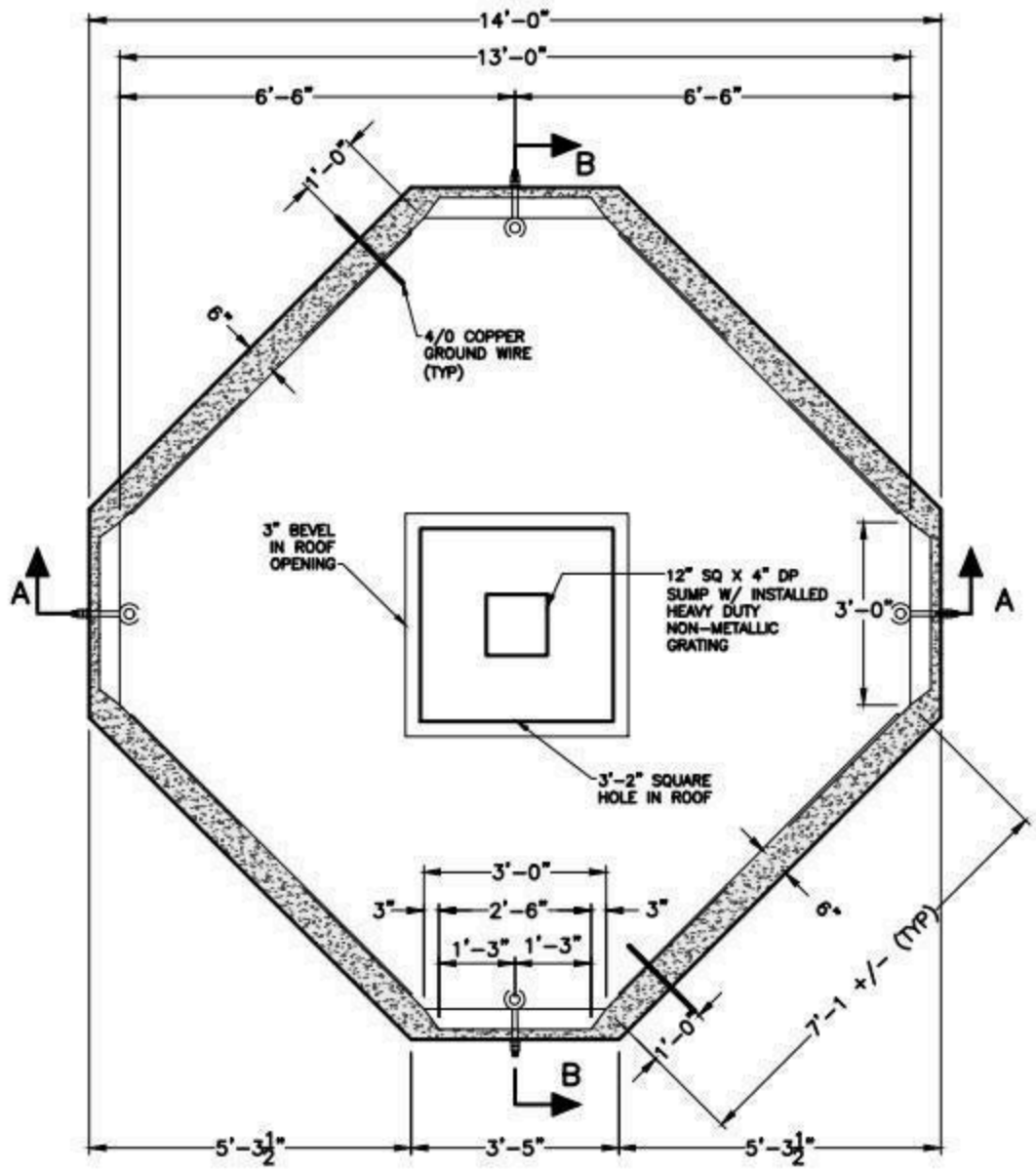

PLAN

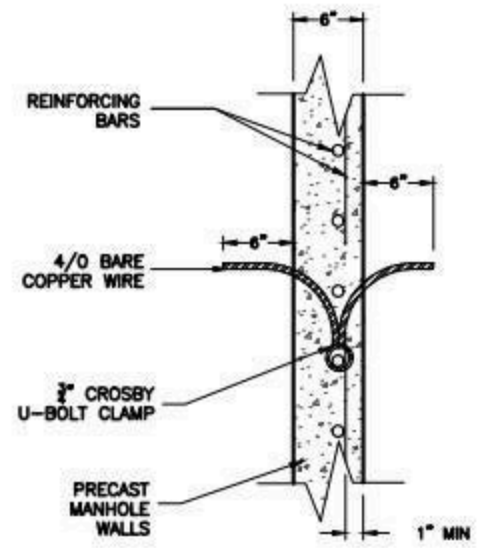

COPPER GROUND WIRE DETAIL

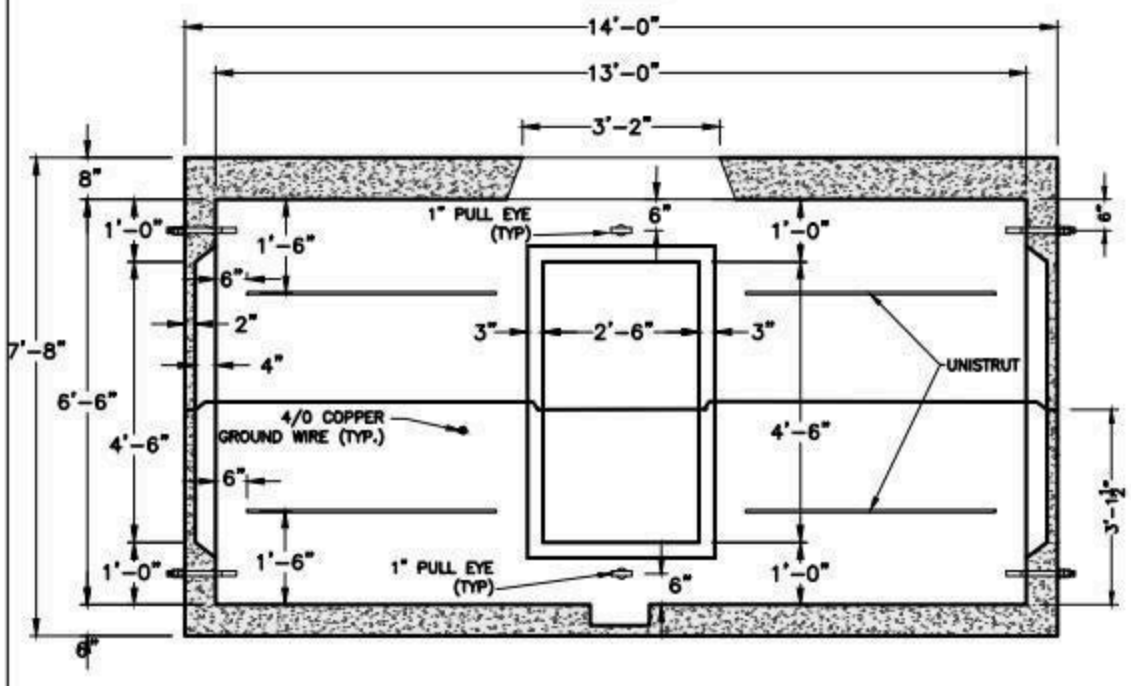

SECTION A-A

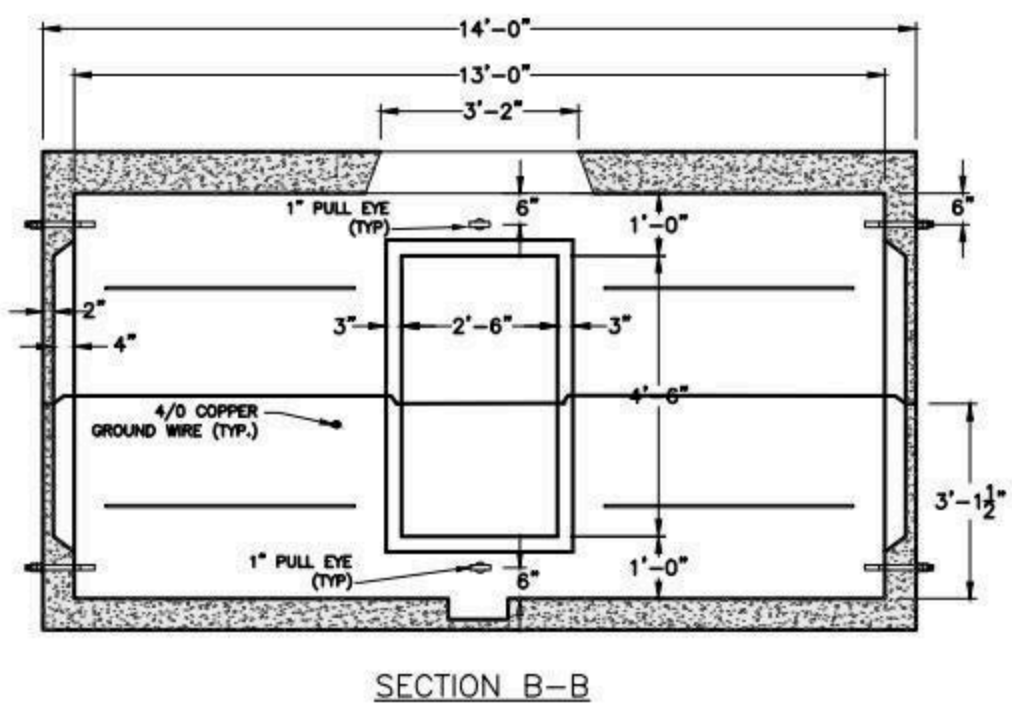

SECTION B-B

NOTES:

1. CONCRETE MINIMUM STRENGTH 5,000 PSI AFTER 28 DAYS.
2. STEEL REINFORCEMENT – ASTM A615, GRADE 60.
3. MINIMUM STEEL COVER – 1-1/2 INCH.
4. DESIGN LOADING – AASHTO HS20-44.
5. DESIGN SPECIFICATIONS – ACI 318 & AASHTO LOAD FACTOR DESIGN METHOD.
6. CONSTRUCTION JOINT – SEALED WITH 1" DIAMETER BUTYL RUBBER OR ACMELITE SEALANT.

SHEA PRODUCT ID: LUMS-3465	FILE NAME: LU-MS3465_4WAY DIST MAN.dwg			NPCA CERTIFIED PLANT
WEIGHT (LBS): 43,400#	DRAWN BY: NMB	DATE: 04/06/2018	PAGE: VI.B.3	

Specifications subject to change without notice

SHEA CONCRETE PRODUCTS
New England's Premier Precaster
800-696-7432 (SHEA)
www.sheaconcrete.com
MAILING ADDRESS: 87 HAVERHILL RD AMESBURY, MA 01913

LIBERTY UTILITIES
5' X 9' X 7' MANHOLE

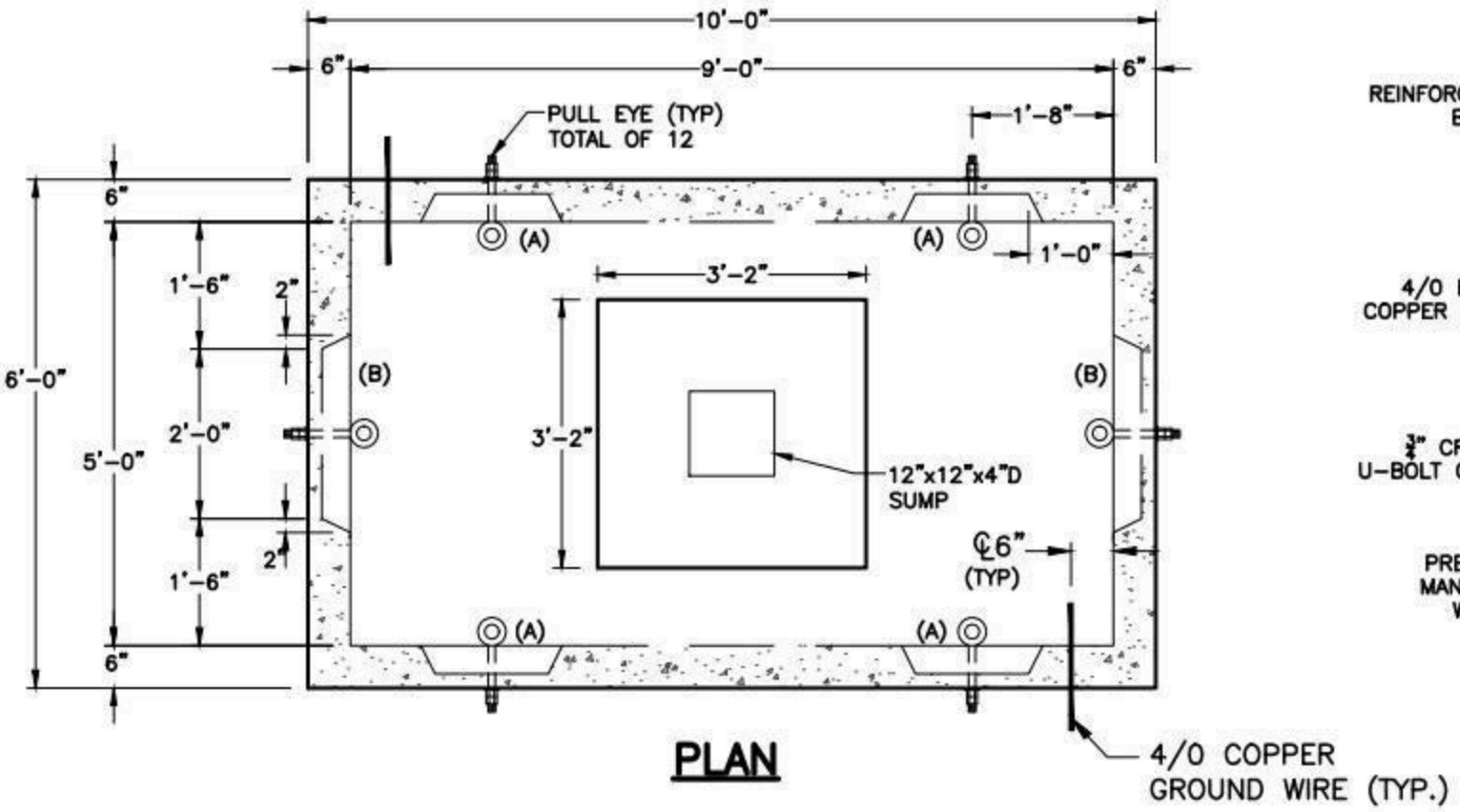

PLAN

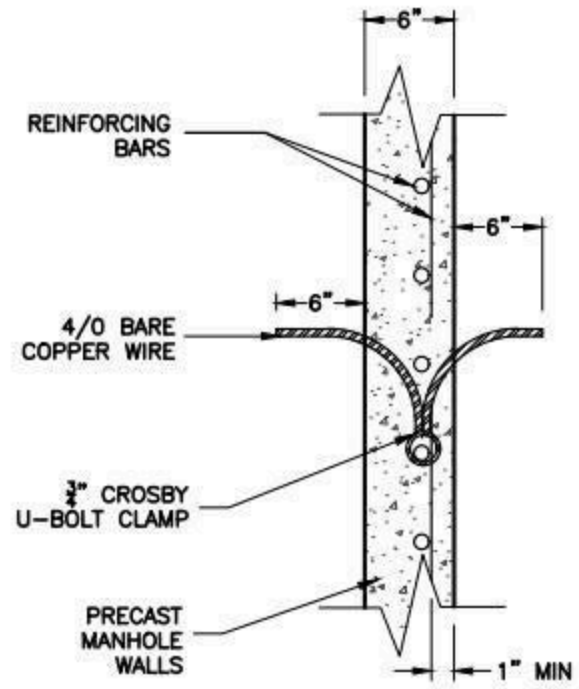

COPPER GROUND WIRE DETAIL

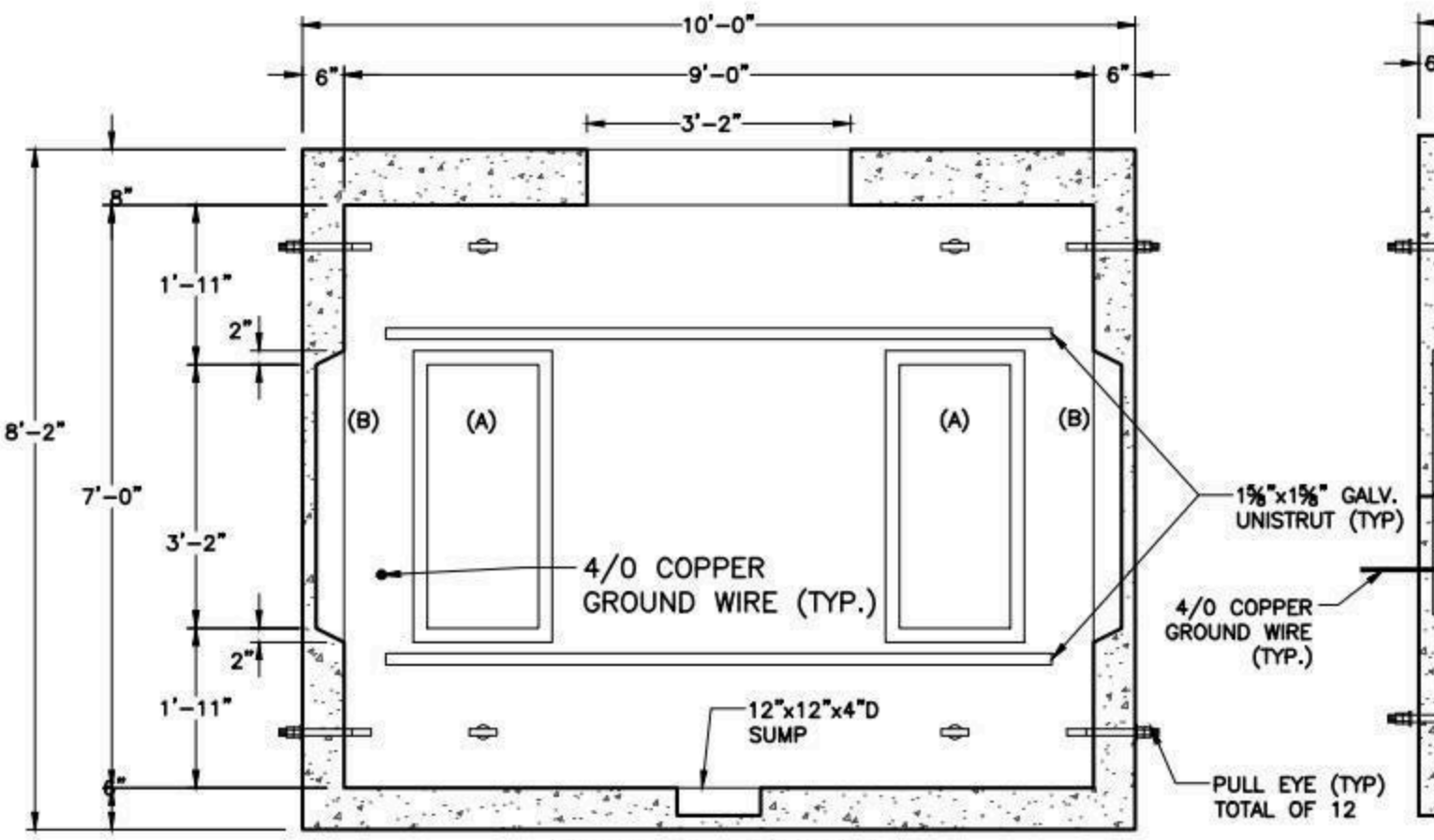

SIDE ELEVATION

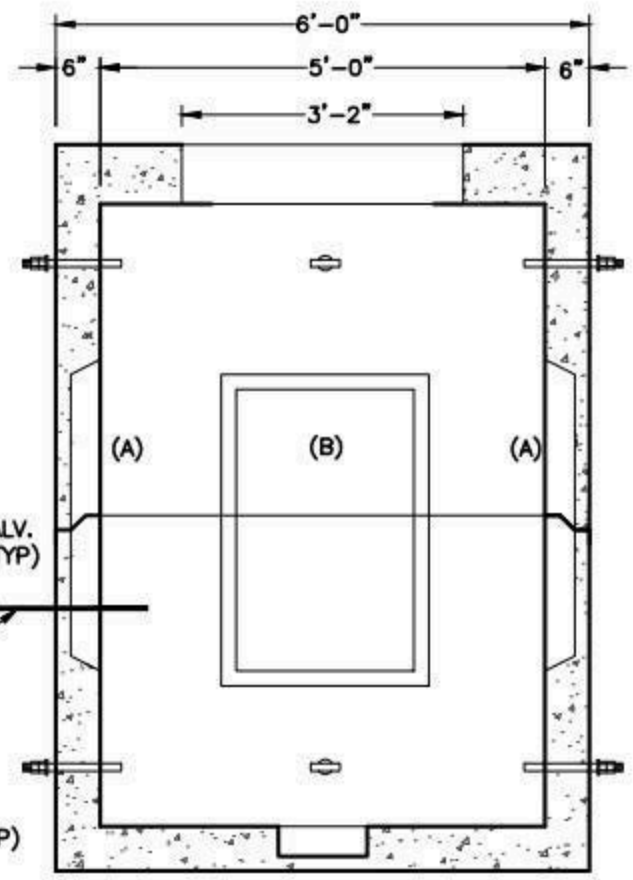

END EVEVATION

NOTES

1. CONCRETE MINIMUM STRENGTH 5,000 PSI AFTER 28 DAYS.
2. STEEL REINFORCEMENT – ASTM A615, GRADE 60.
3. MINIMUM STEEL COVER – 1 INCH.
4. DESIGN LOADING – AASHTO HS20-44.

KNOCKOUTS	
(A)	16"x38"
(B)	24"x38"

SHEA PRODUCT ID: NG-59-7	FILE NAME: LU-MSUM39.dwg		
WEIGHT (LBS): 24,400#	DRAWN BY: NMB	DATE: 04/06/2018	PAGE: VI.B.4

NPCA CERTIFIED PLANT

Specifications subject to change without notice

SHEA CONCRETE PRODUCTS
New England's Premier Precaster
800-696-7432 (SHEA)
www.sheaconcrete.com
MAILING ADDRESS: 87 HAVERHILL RD AMESBURY, MA 01913

LIBERTY UTILITIES LU-MS3467 15 kV SWITCHGEAR MANHOLE

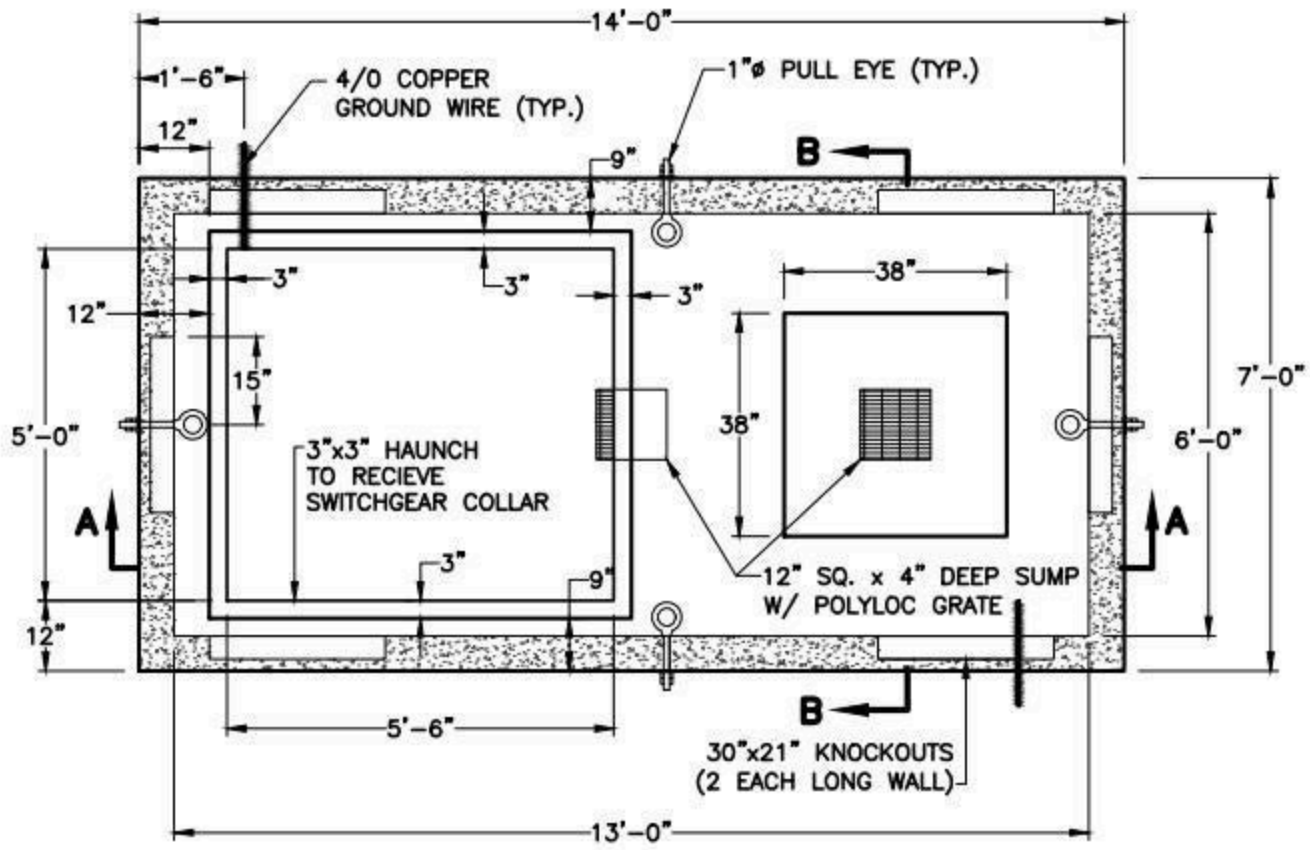

PLAN

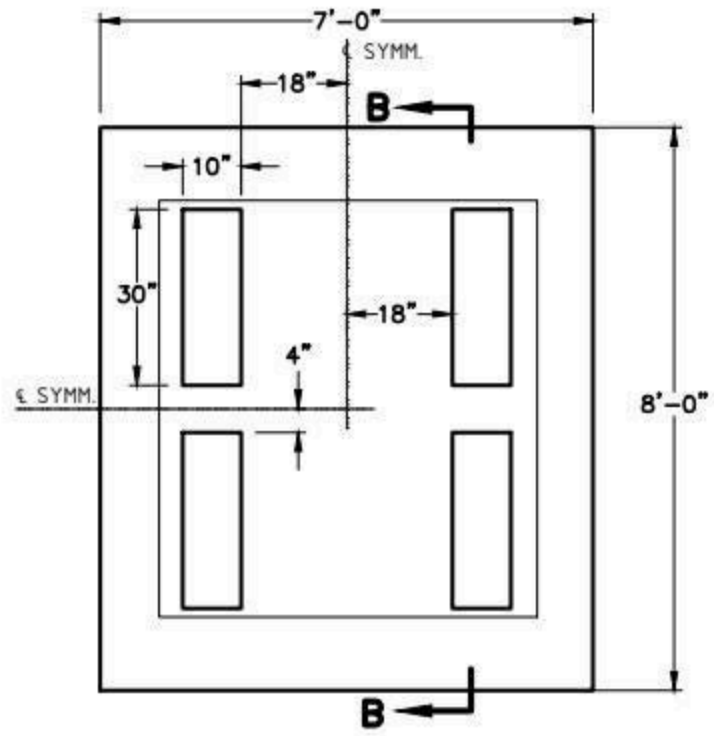

COLLAR "A" 15kV SG COLLAR PLAN

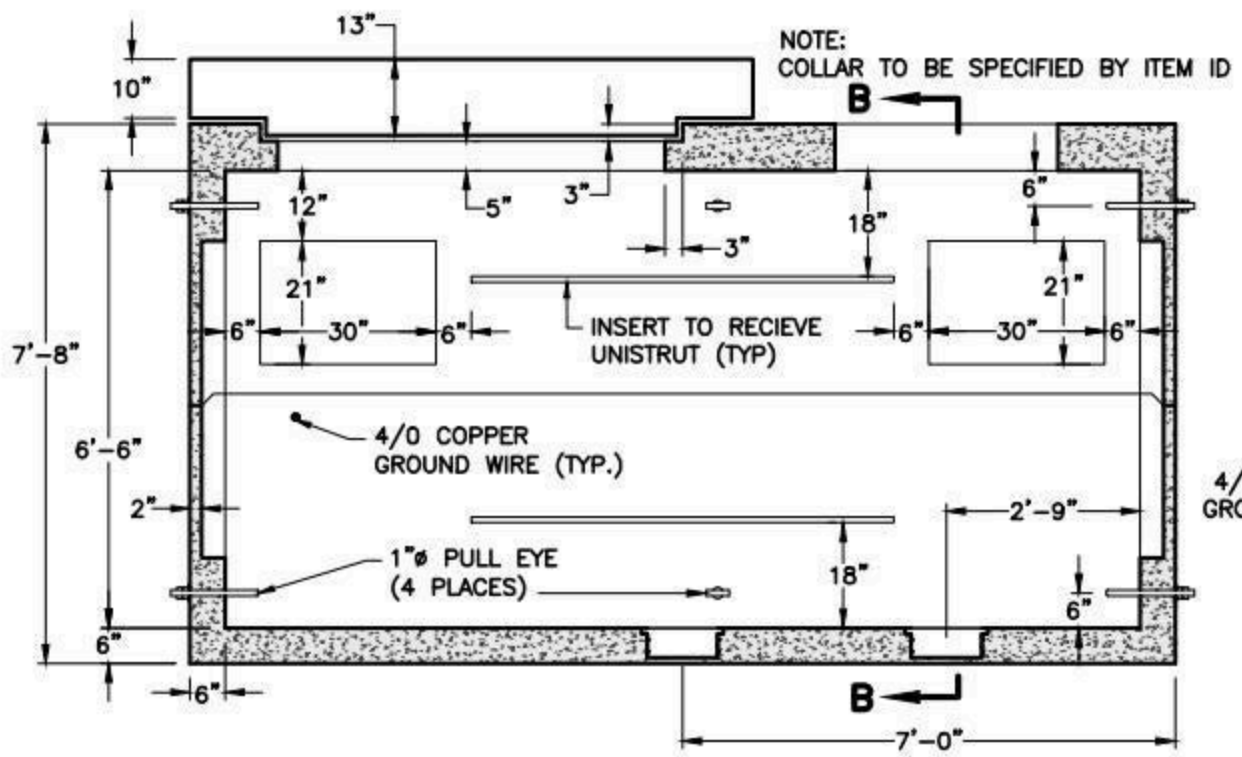

SECTION A-A

OPPOSITE WALLS ARE MIRROR IMAGES.

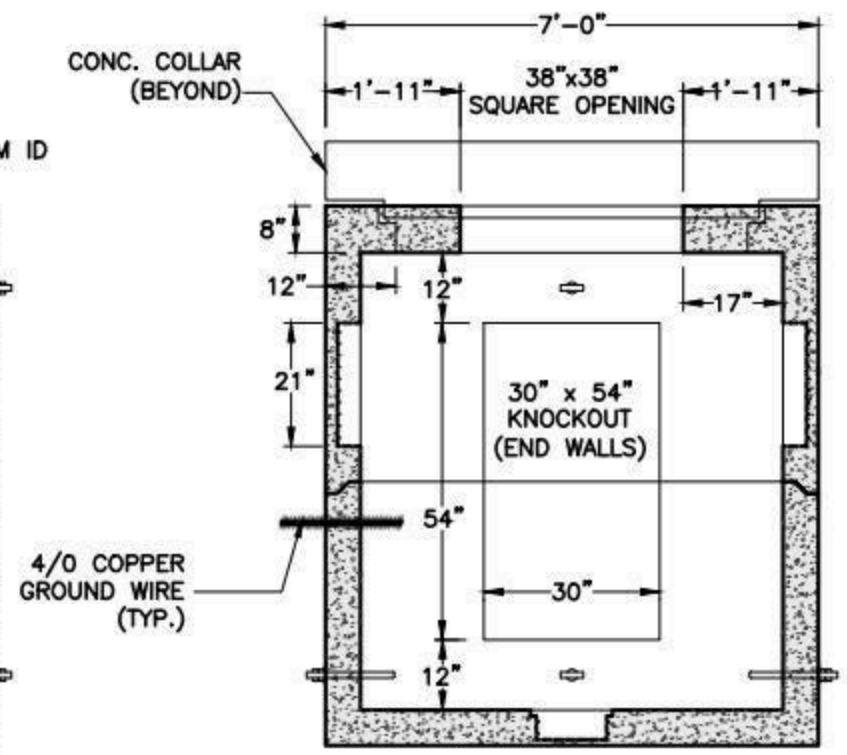

SECTION B-B

OPPOSITE WALLS ARE MIRROR IMAGES.

NOTES:

1. CONCRETE MINIMUM STRENGTH 5,000 PSI AFTER 28 DAYS.
2. STEEL REINFORCEMENT – ASTM A615, GRADE 60, 1" MIN. COVER.
3. DESIGN LOADING – AASHTO HS20-44, COVER 0 TO 5FT.
4. TONGUE & GROOVE JOINT SEALED WITH BUTYL RESIN.
5. DESIGNED IN ACCORDANCE WITH ASTM C-857 AND C-858.

SHEA PRODUCT ID: NG-613-66SG	FILE NAME: LU-MS3467 SWITCHGEAR MANHOLE.dwg		
WEIGHT (LBS): 34,300#	DRAWN BY: NMB	DATE: 05/25/18	PAGE: VI.C.1

NPCA CERTIFIED PLANT

Specifications subject to change without notice

SHEA CONCRETE PRODUCTS
New England's Premier Precaster
800-696-7432 (SHEA)
www.sheaconcrete.com
MAILING ADDRESS: 87 HAVERHILL RD AMESBURY, MA 01913

LIBERTY UTILITIES LU-MS2582
3-PHASE T.P. 75-500 KVA

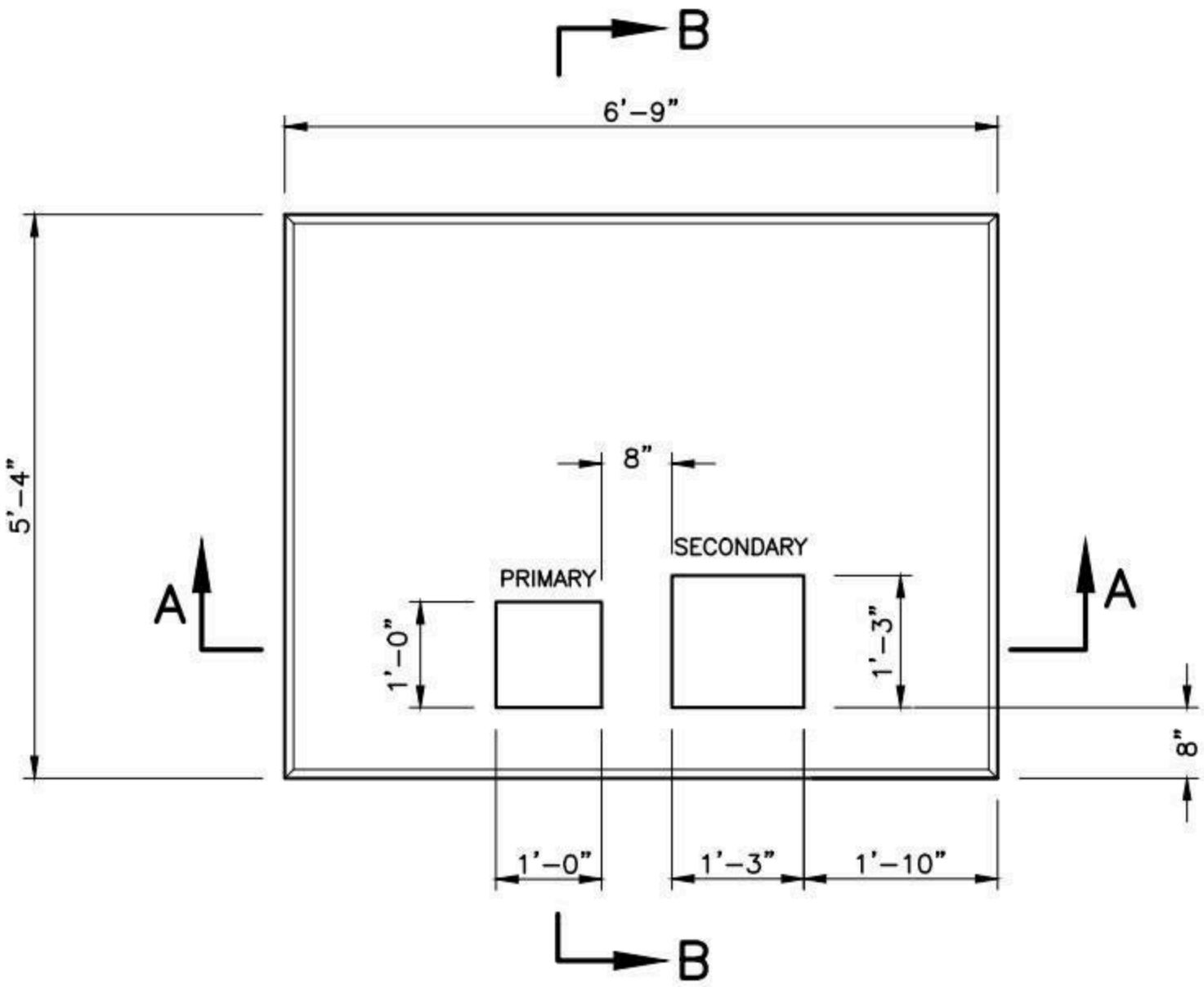

PLAN

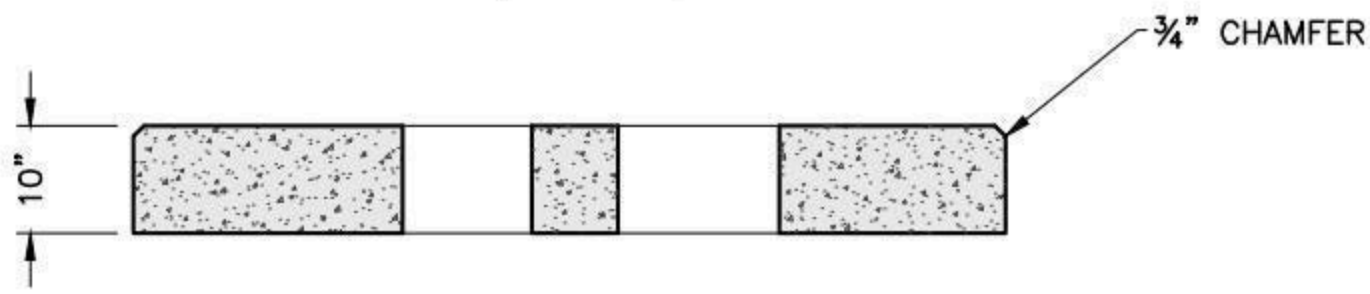

SECTION A-A

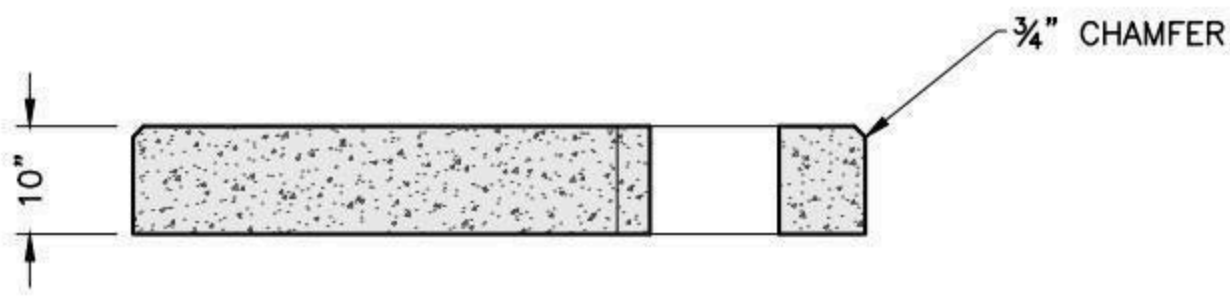

SECTION B-B

NOTES:

1. CONCRETE MINIMUM STRENGTH 5,000 PSI AFTER 28 DAYS.
2. ALL REINFORCEMENT PER ASTM A-615
3. ALL MATERIAL CONFORM TO ACI-318.
4. THREE PHASE-15 kV. 75-500 kVA.

SHEA PRODUCT ID: LUMS-2582	FILE NAME: LU-MS2582_NG44-113_TPAD.dwg			NPCA CERTIFIED PLANT
WEIGHT (LBS): 4,450#	DRAWN BY: NMB	DATE: 05/15/2015	PAGE: VI.D.1	

Specifications subject to change without notice

SHEA CONCRETE PRODUCTS
New England's Premier Precaster
800-696-7432 (SHEA)
www.sheaconcrete.com
MAILING ADDRESS: 87 HAVERHILL RD AMESBURY, MA 01913

LIBERTY OIL CURB ASSEMBLY 3-PHASE T.P. 75-500 KVA

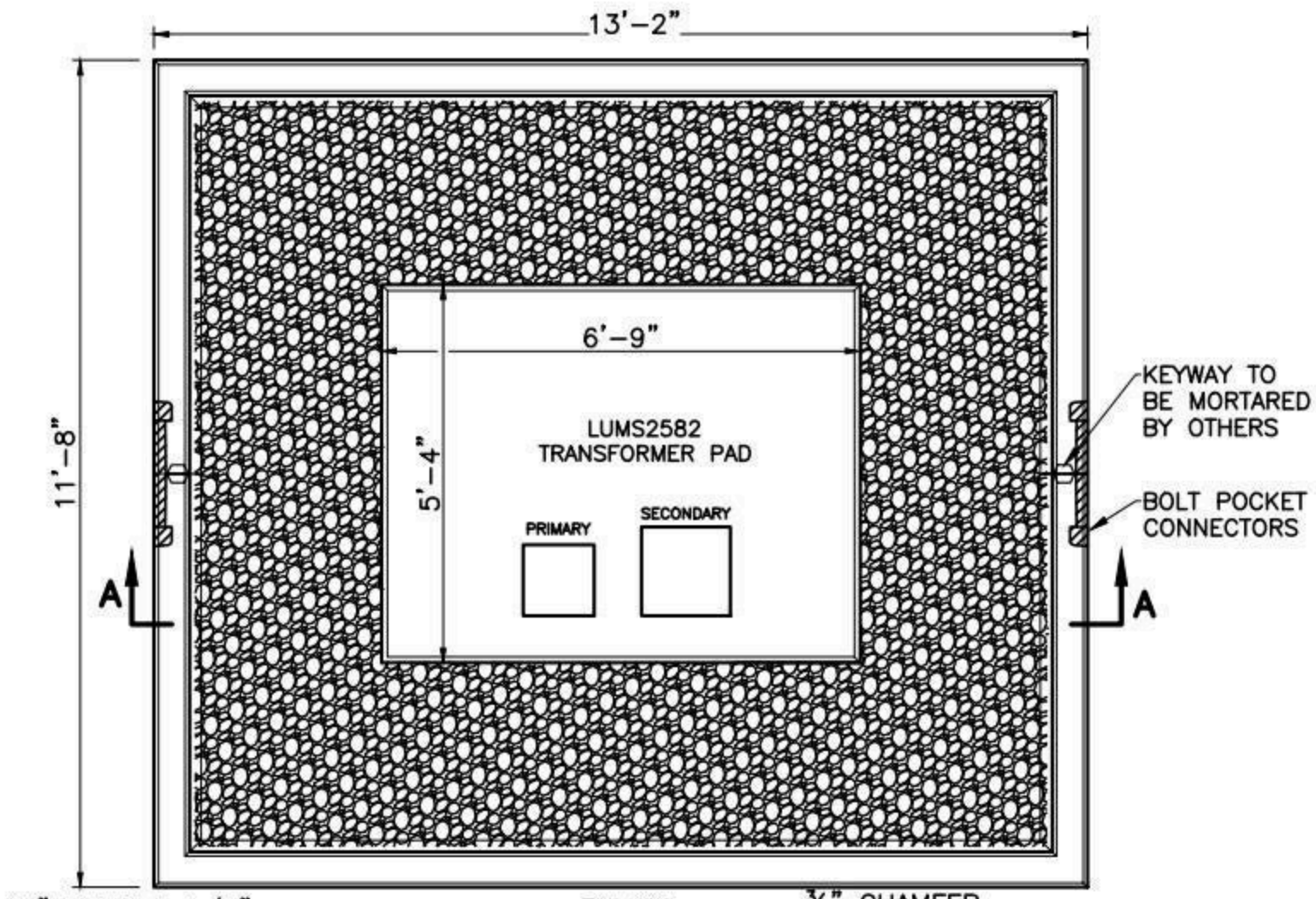

PLAN

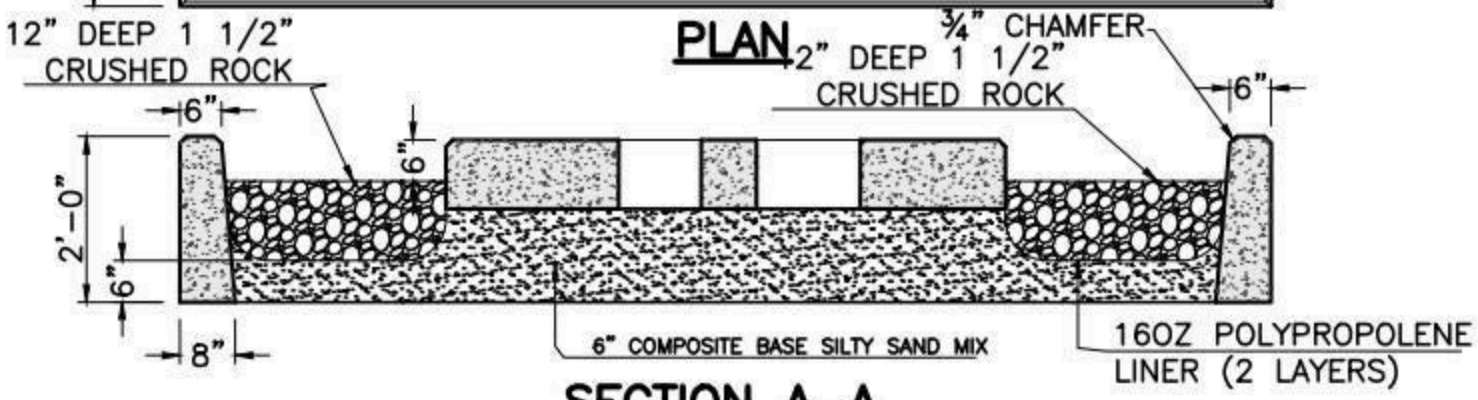

SECTION A-A

NOTES:
1. CONCRETE: 4,000 PSI MINIMUM AFTER 28 DAYS.
2. ALL REINFORCEMENT #5 REBAR
3. ALL MATERIAL CONFORMS TO ACI-318
4. TO BE ASSEMBLED AND GROUTED BY CONTRACTOR.
5. STANDARD ITEM #
6. ITEM ID #

SHEA PRODUCT ID: NGOC124X142	FILE NAME: LU-MS2582_OIL CONTAINMENT.dwg		
WEIGHT (LBS): 9,500#	DRAWN BY: MNN	DATE: 02/28/18	PAGE: VI.D.2

NPCA CERTIFIED PLANT

Specifications subject to change without notice

SHEA CONCRETE PRODUCTS
New England's Premier Precaster
800-696-7432 (SHEA)
www.sheaconcrete.com
MAILING ADDRESS: 87 HAVERHILL RD AMESBURY, MA 01913

LIBERTY UTILITIES LU-MS2583
3-PHASE T.P. 750-2500 KVA

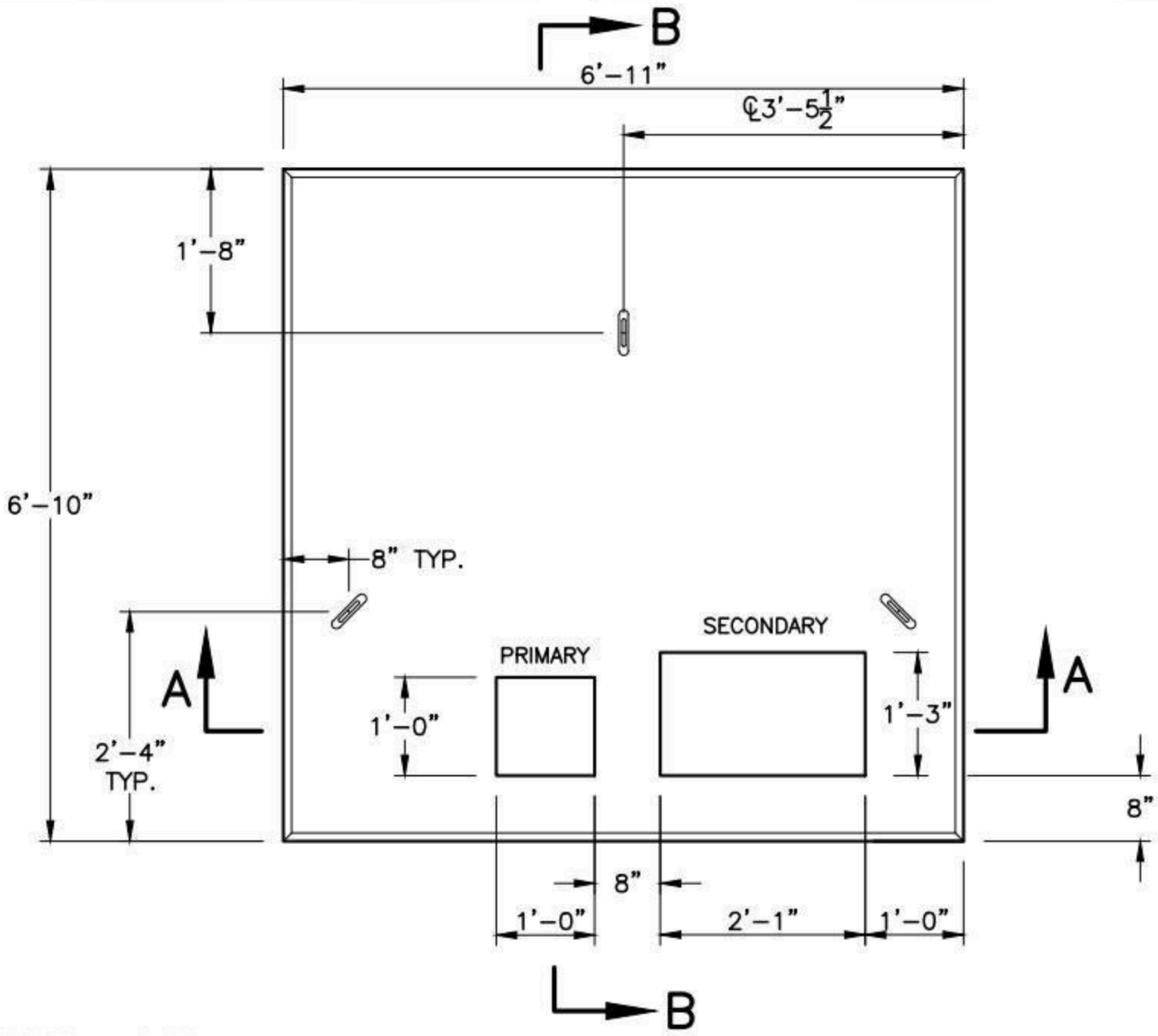

PLAN

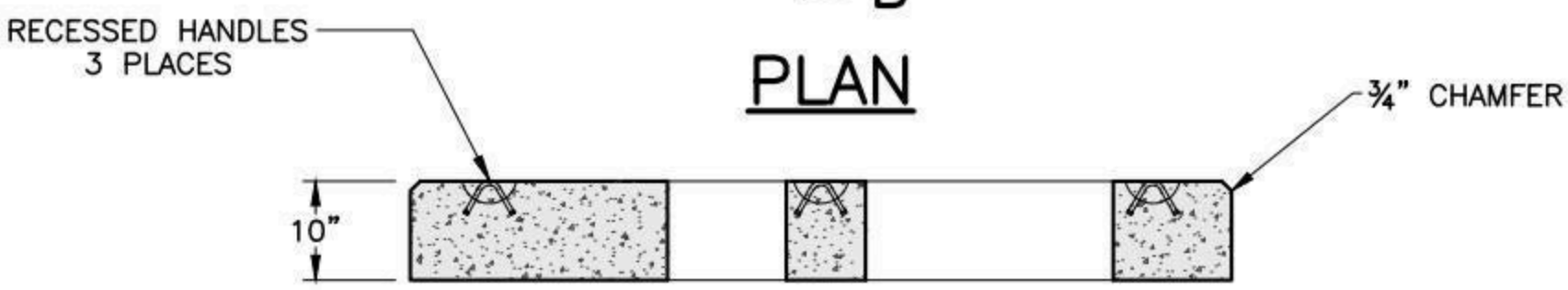

SECTION A-A

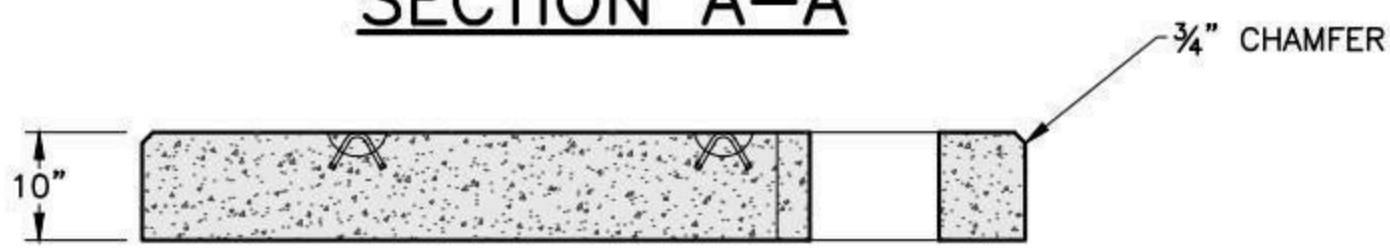

SECTION B-B

NOTES:

1. CONCRETE MINIMUM STRENGTH 5,000 PSI AFTER 28 DAYS.
2. KEEP 3' AWAY FROM EDGE OF SIDEWALK AND 8' FROM EDGE OF ROADWAY.
3. ALL REINFORCEMENT PER ASTM A-615
4. THREE PHASE-15 kV MAXIMUM. 750-1000 kVA-kVA-208Y/120, 750-2500 kVA-480Y/277.

SHEA PRODUCT ID: LUMS-2583	FILE NAME: LU-MS2583_NG44-114_TPAD.dwg			NPCA CERTIFIED PLANT
WEIGHT (LBS): 5,400#	DRAWN BY: NMB	DATE: 02/28/18	PAGE: VI.D.3	

Specifications subject to change without notice

SHEA CONCRETE PRODUCTS
New England's Premier Precaster
800-696-7432 (SHEA)
www.sheaconcrete.com
MAILING ADDRESS: 87 HAVERHILL RD AMESBURY, MA 01913

LIBERTY OIL CURB ASSEMBLY
3-PHASE T.P. 750-2500 KVA

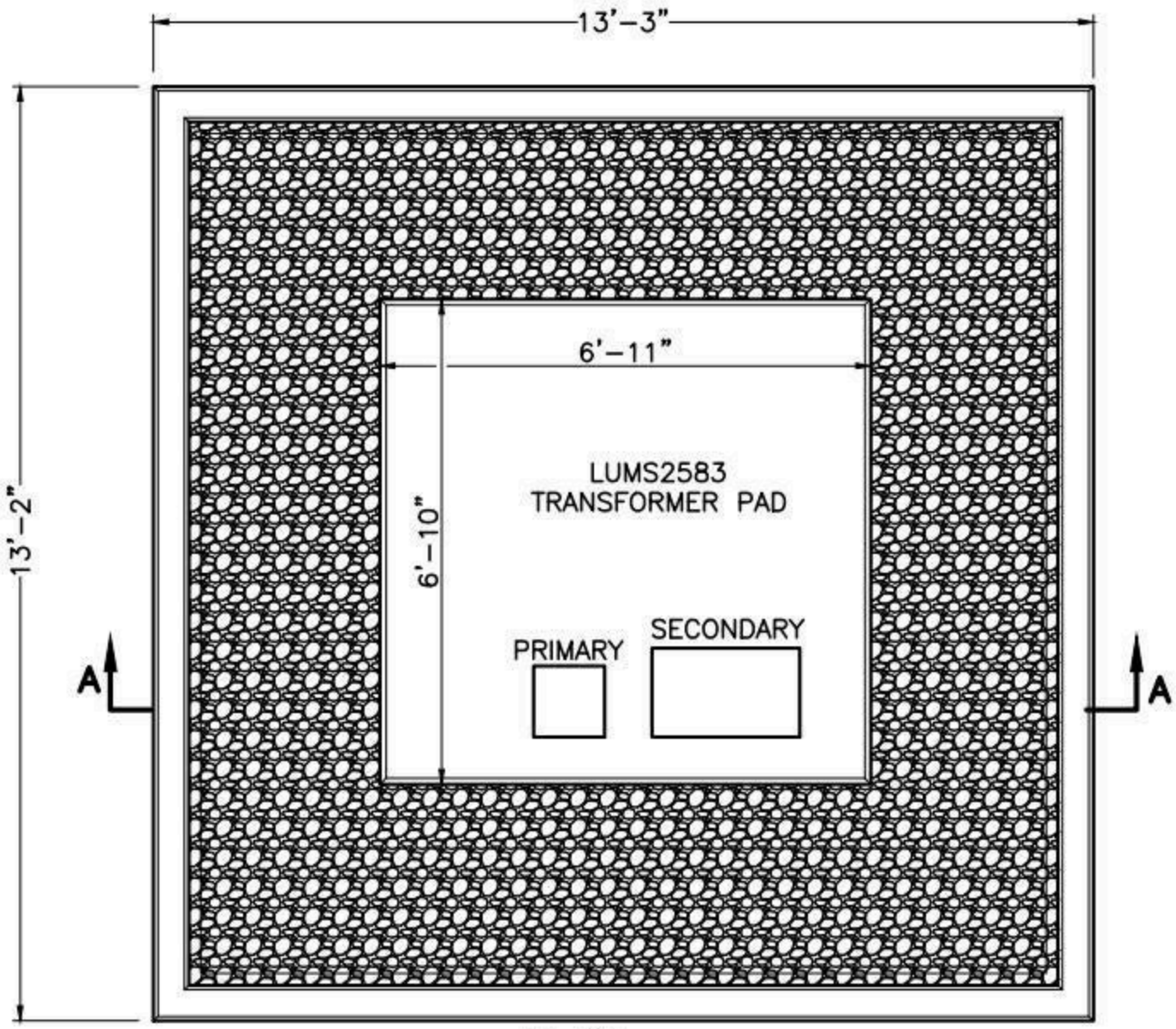

PLAN

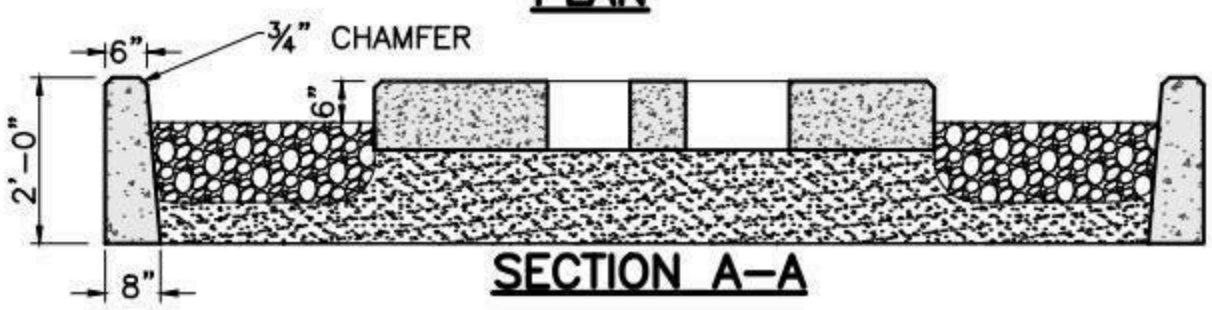

SECTION A-A

NOTES:
1. CONCRETE: 4,000 PSI MINIMUM AFTER 28 DAYS.
2. ALL REINFORCEMENT #5 REBAR
3. ALL MATERIAL CONFORMS TO ACI-318
4. TO BE ASSEMBLED AND GROUTED BY CONTRACTOR.
5. STANDARD ITEM #
6. ITEM ID #

SHEA PRODUCT ID: NGOC142X143	FILE NAME: LU-MS2583_OIL CONTAINMENT.dwg		
WEIGHT (LBS): 9,900#	DRAWN BY: MNN	DATE: 02/28/18	PAGE: VI.D.4

NPCA CERTIFIED PLANT

Specifications subject to change without notice

SHEA CONCRETE PRODUCTS
New England's Premier Precaster
800-696-7432 (SHEA)
www.sheaconcrete.com
MAILING ADDRESS: 87 HAVERHILL RD AMESBURY, MA 01913

UNITIL 2-3-11 SINGLE PHASE PULL BOX

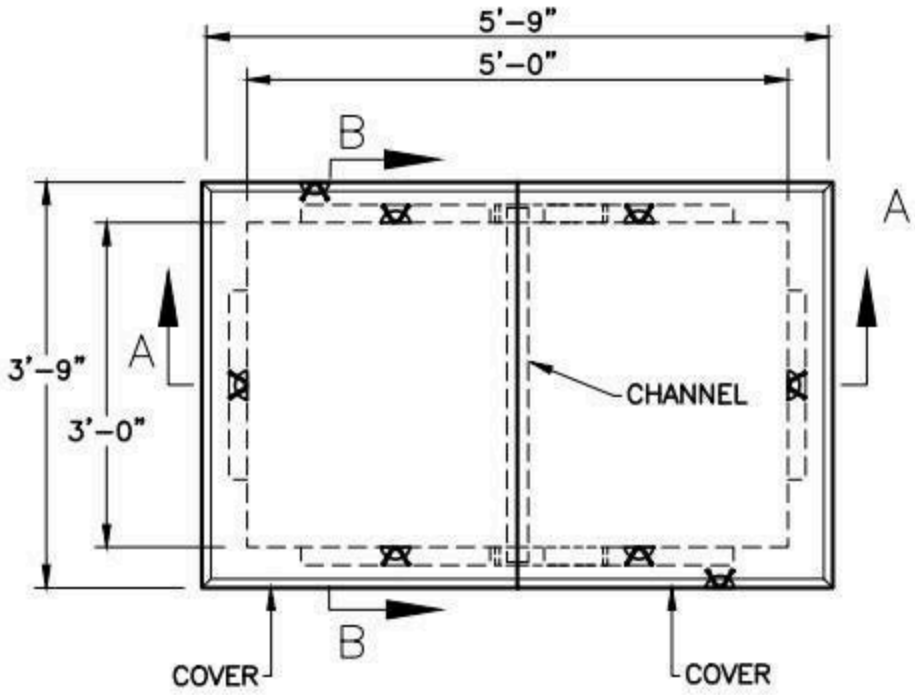

PLAN

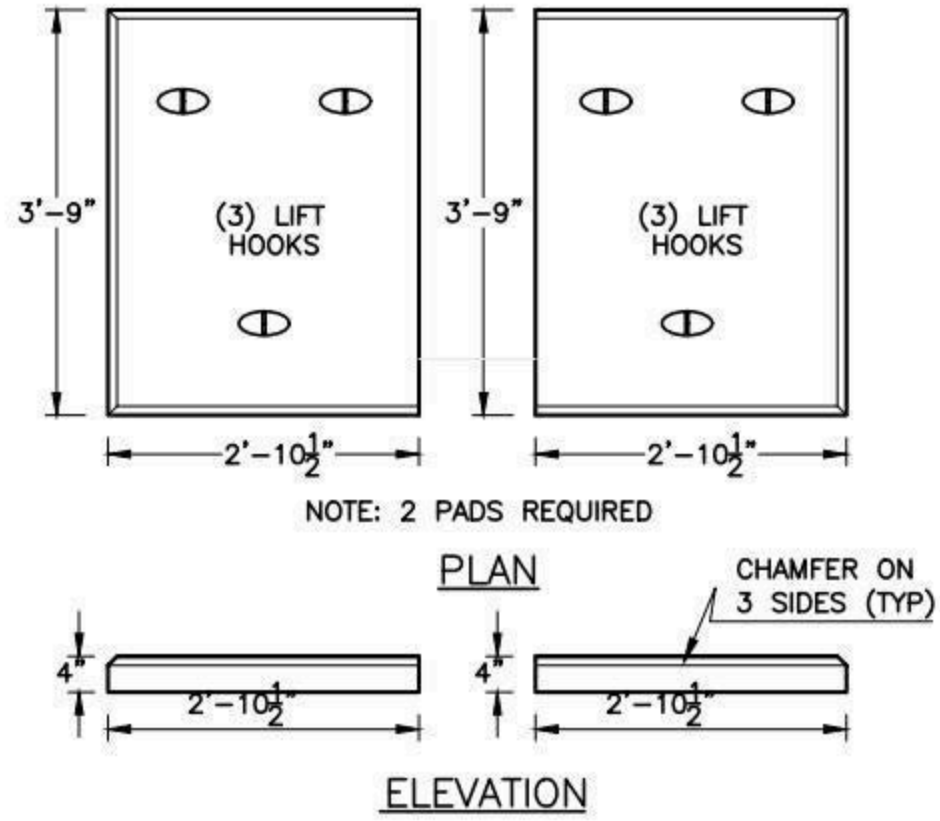

COVER

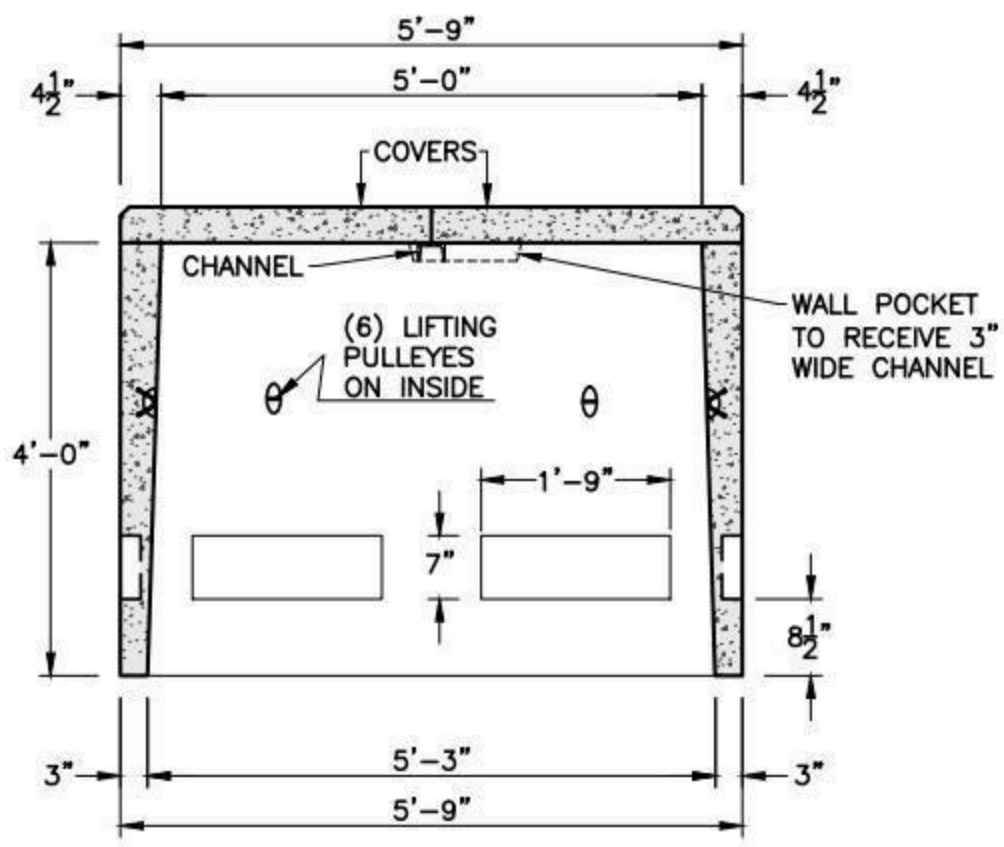

SECTION A-A

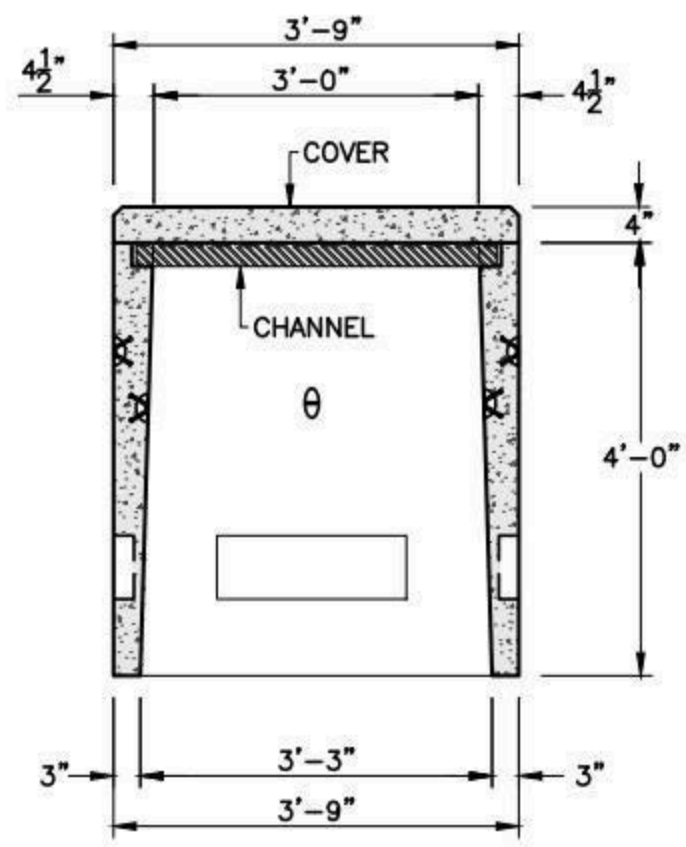

SECTION B-B

NOTES:

1. CONCRETE MINIMUM STRENGTH 4,000 PSI AFTER 28 DAYS.

SHEA PRODUCT ID: U2-3-11	FILE NAME: UNITIL 2-3-11.dwg		
WEIGHT (LBS): 4,500#	DRAWN BY: NMB	DATE: 12/11/2014	PAGE: VII.A.1

NPCA CERTIFIED PLANT

Specifications subject to change without notice

SHEA CONCRETE PRODUCTS
New England's Premier Precaster
800-696-7432 (SHEA)
www.sheaconcrete.com
MAILING ADDRESS: 87 HAVERHILL RD AMESBURY, MA 01913

UNITIL 2-3-12 THREE PHASE PULL BOX

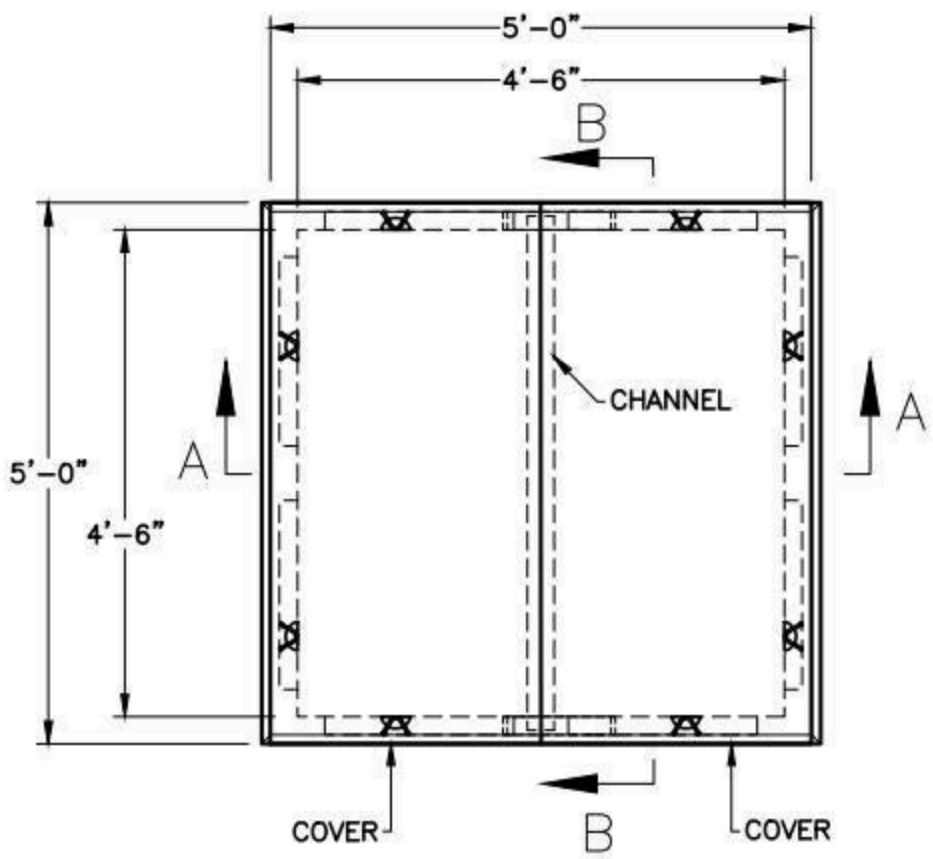

PLAN

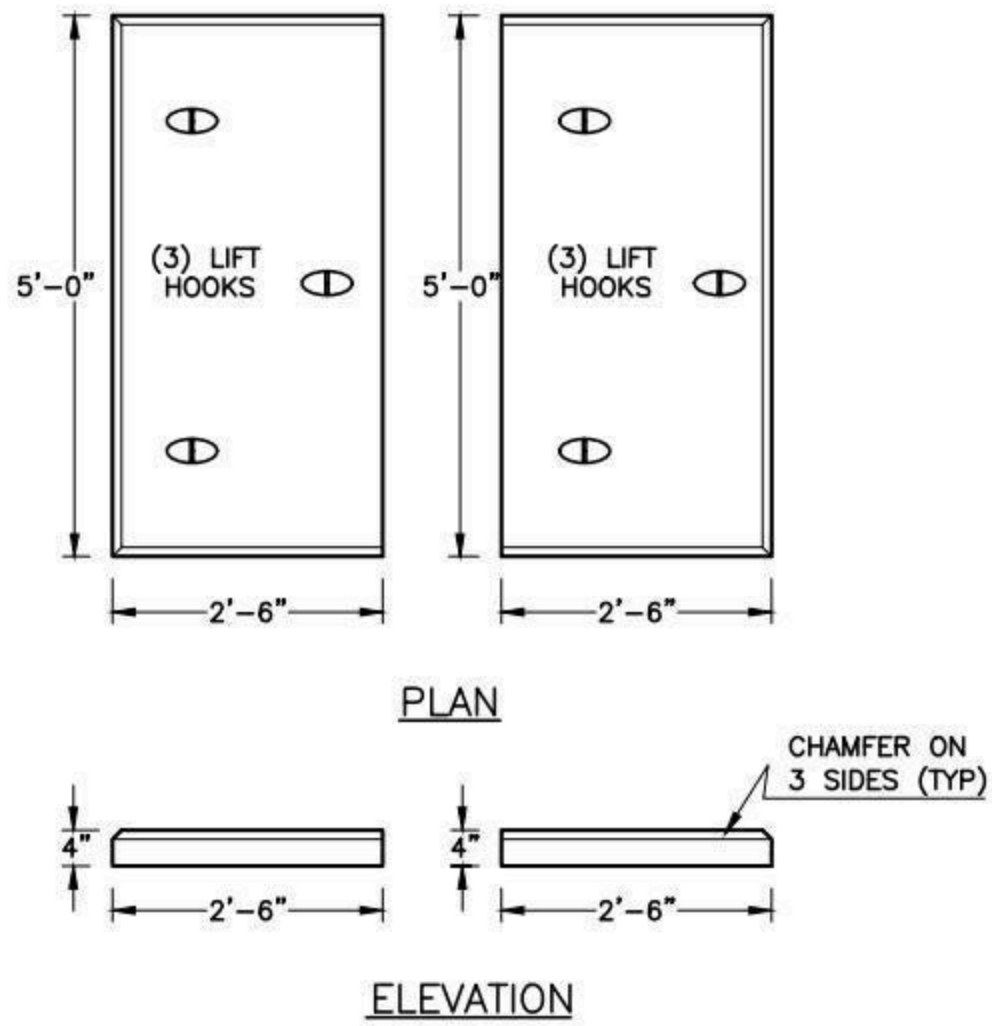

COVER

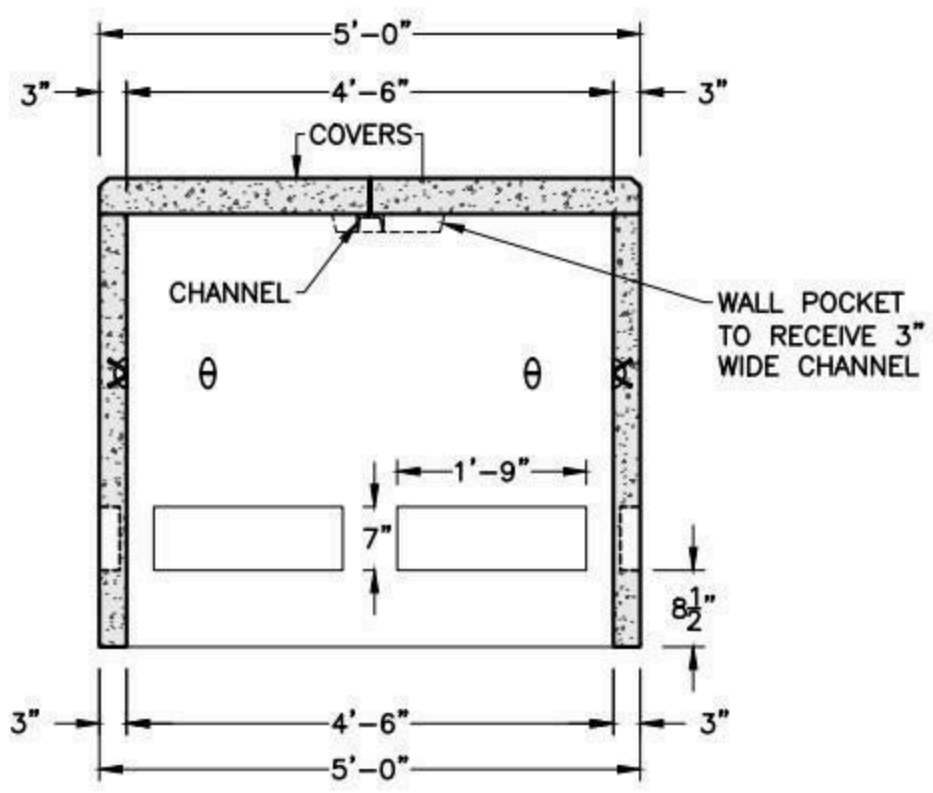

SECTION A-A

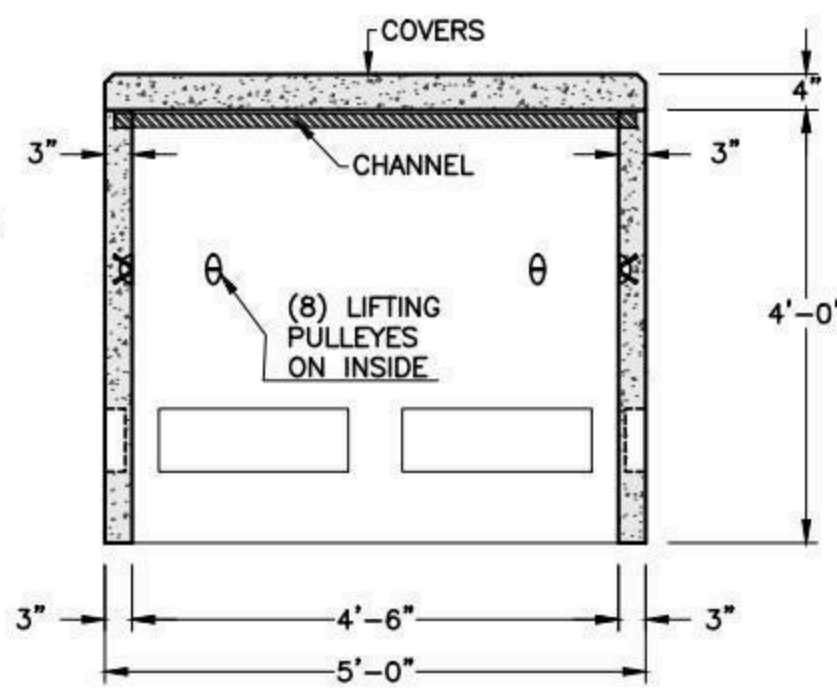

SECTION B-B

NOTES:

1. CONCRETE MINIMUM STRENGTH 4,000 PSI AFTER 28 DAYS.

SHEA PRODUCT ID: U2-3-12	FILE NAME: UNITIL 2-3-12.dwg		
WEIGHT (LBS): 4,500#	DRAWN BY: NMB	DATE: 12/11/2014	PAGE: VII.A.2

NPCA CERTIFIED PLANT

Specifications subject to change without notice

SHEA CONCRETE PRODUCTS
New England's Premier Precaster
800-696-7432 (SHEA)
www.sheaconcrete.com
MAILING ADDRESS: 87 HAVERHILL RD AMESBURY, MA 01913

UNITIL 2-3-13
SINGLE PHASE TRANSFORMER

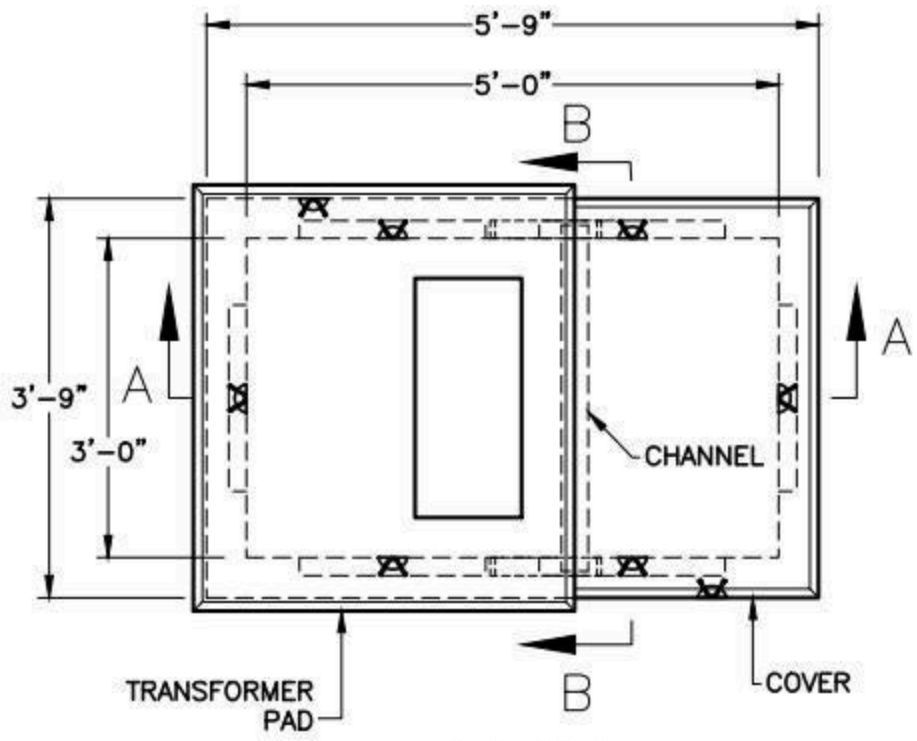

PLAN

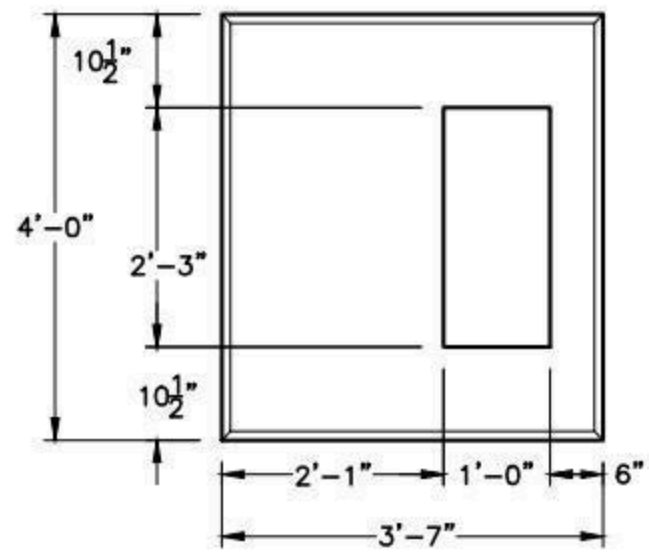

PLAN

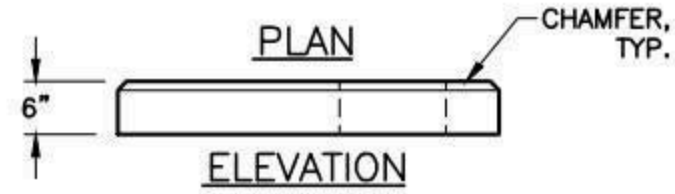

ELEVATION

TRANSFORMER PAD

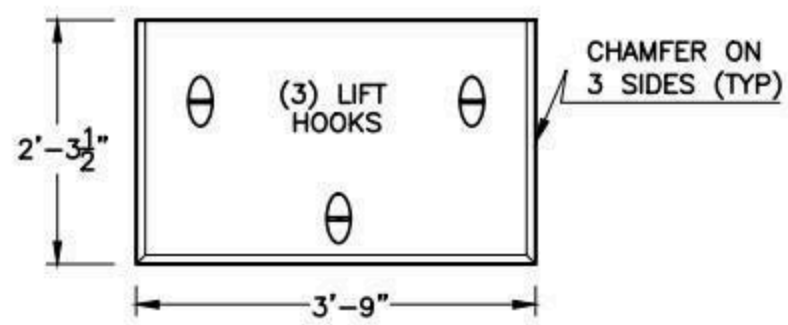

PLAN

COVER

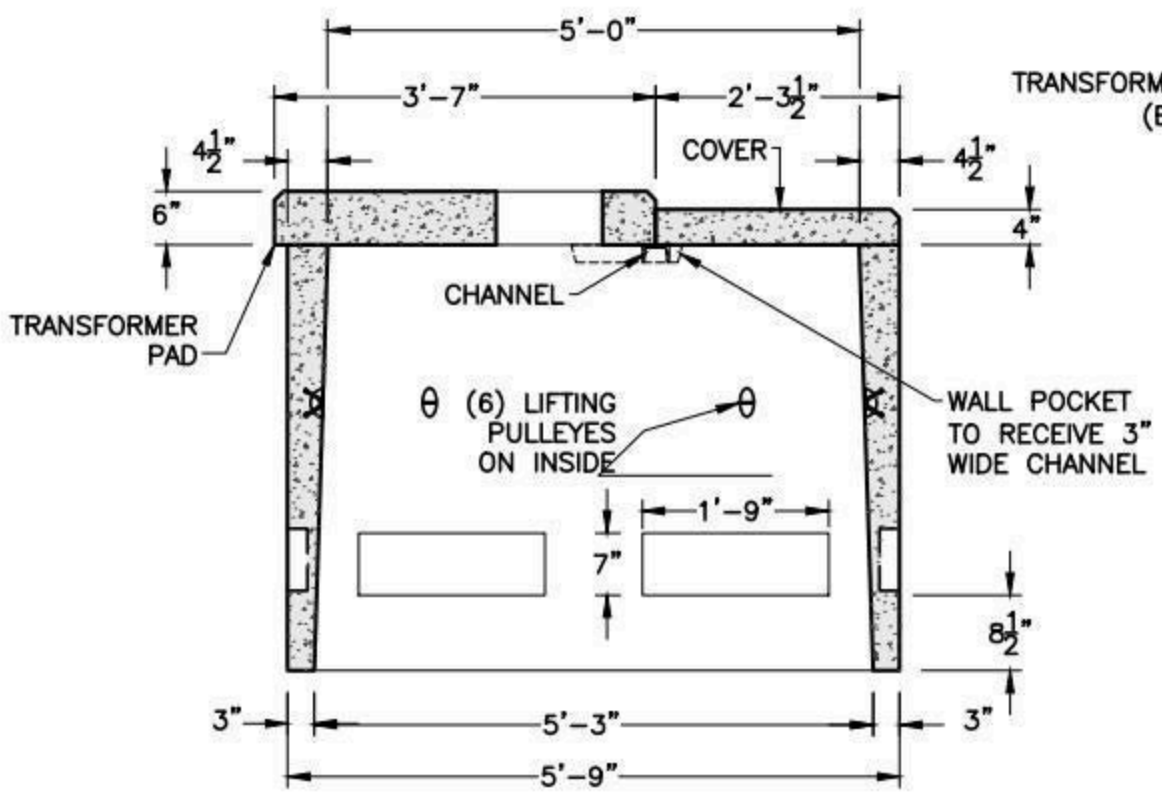

SECTION A-A

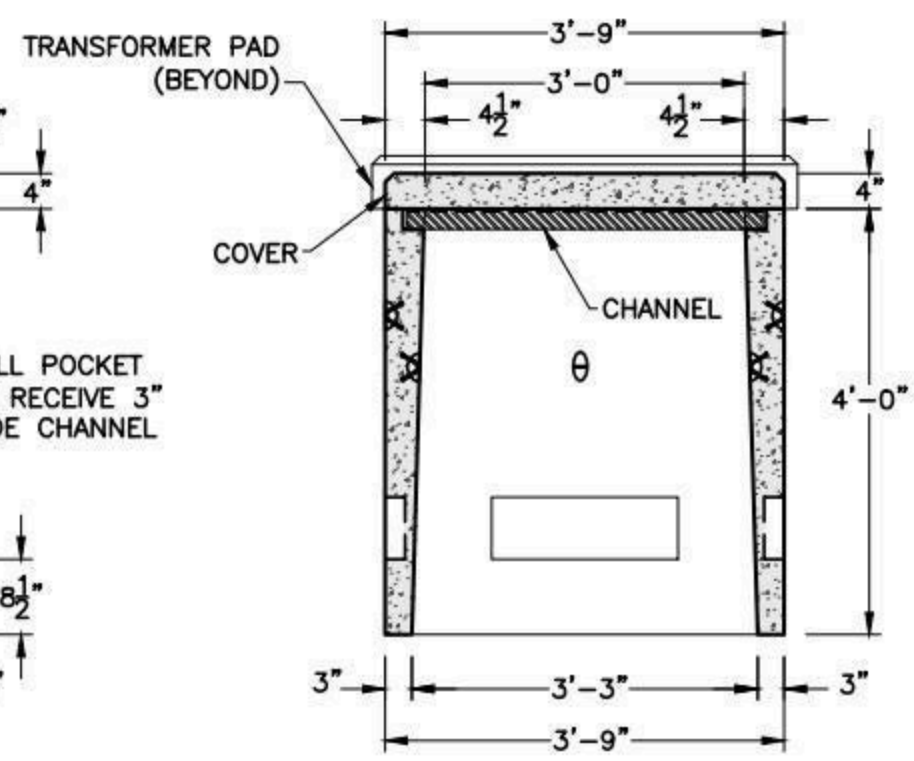

SECTION B-B

NOTES:

1. CONCRETE MINIMUM STRENGTH 4,000 PSI AFTER 28 DAYS.

SHEA PRODUCT ID: U2-3-13	FILE NAME: UNITIL 2-3-13.dwg		
WEIGHT (LBS): 4,500#	DRAWN BY: MNN	DATE: 01/11/2018	PAGE: VII.A.3

NPCA CERTIFIED PLANT

Specifications subject to change without notice

SHEA CONCRETE PRODUCTS
New England's Premier Precaster
800-696-7432 (SHEA)
www.sheaconcrete.com
MAILING ADDRESS: 87 HAVERHILL RD AMESBURY, MA 01913

UNITIL 2-3-14
THREE PHASE TRANSFORMER

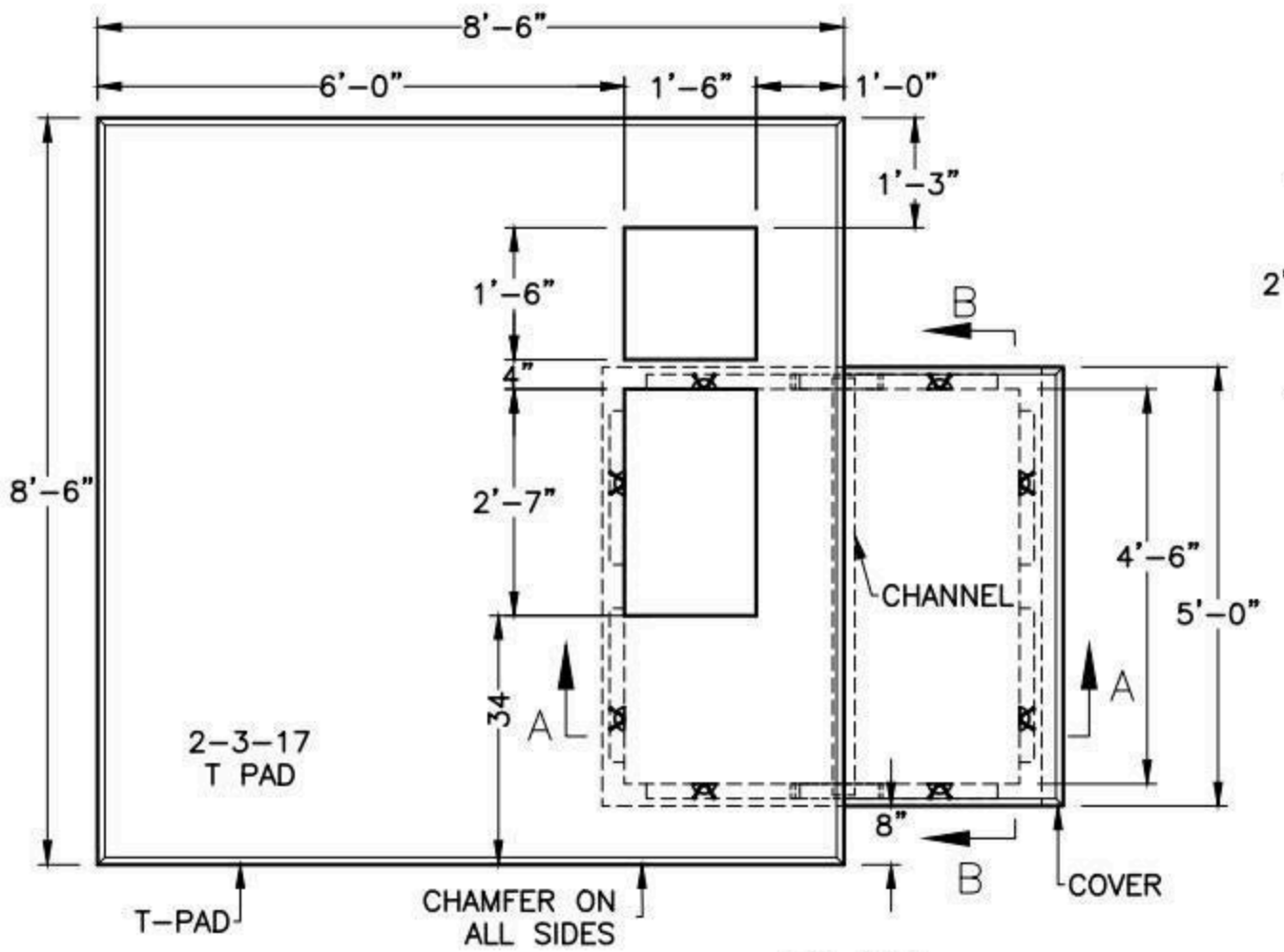

PLAN

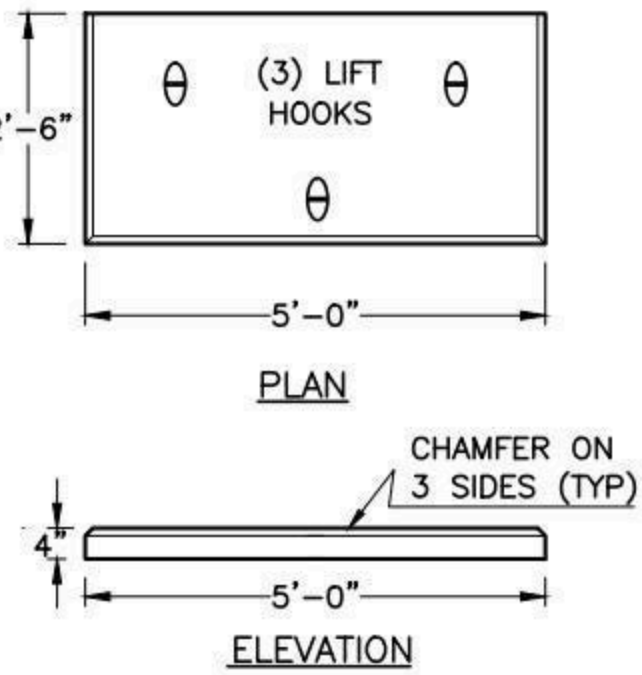

COVER

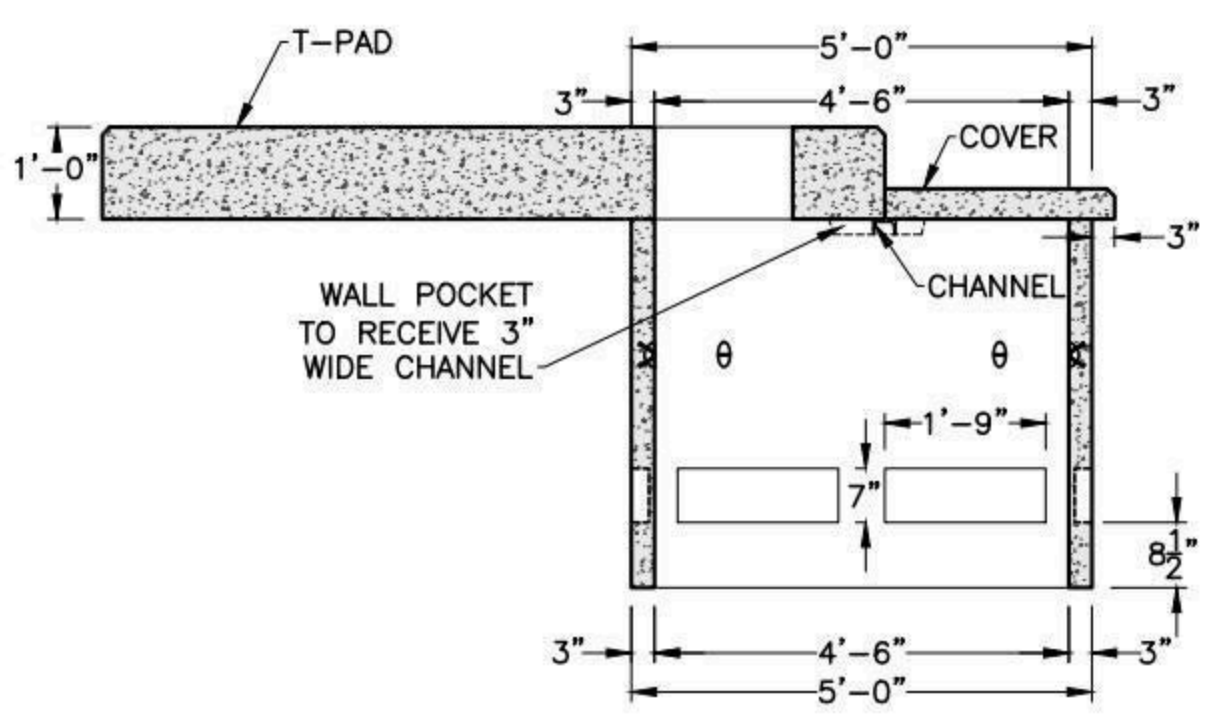

SECTION A-A

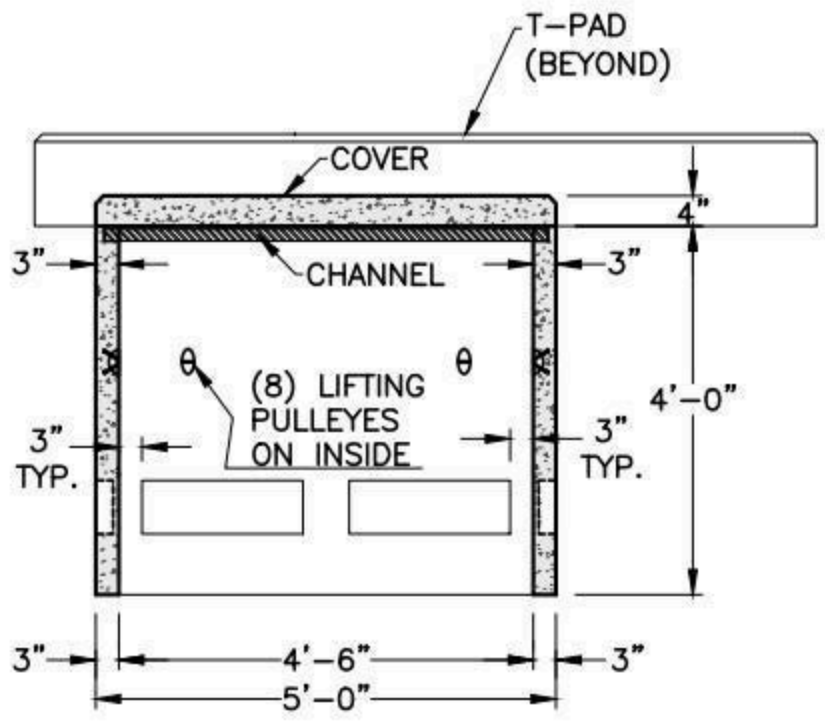

SECTION B-B

NOTES:
1. CONCRETE MINIMUM STRENGTH 4,000 PSI AFTER 28 DAYS.

SHEA PRODUCT ID: U2-3-14	FILE NAME: UNITIL 2-3-14.dwg		
WEIGHT (LBS): 13,420#	DRAWN BY: MNN	DATE: 01/11/2018	PAGE: VII.A.4

Specifications subject to change without notice

SHEA CONCRETE PRODUCTS
New England's Premier Precaster
800-696-7432 (SHEA)
www.sheaconcrete.com
MAILING ADDRESS: 87 HAVERHILL RD AMESBURY, MA 01913

UNITIL 2-3-15 SINGLE PHASE SECTIONALIZING PAD AND CABINET

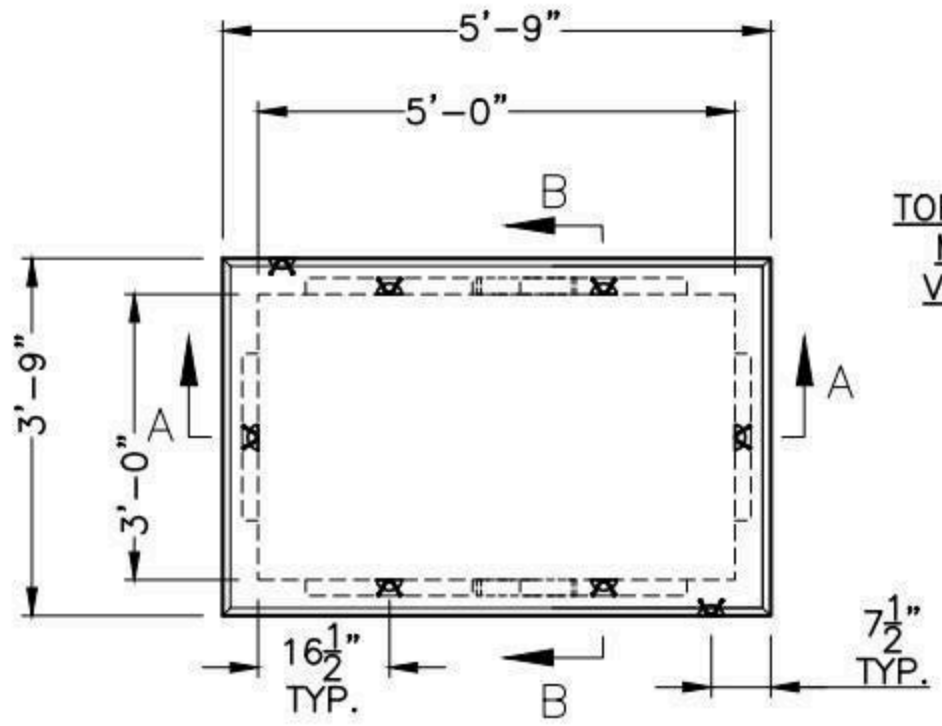

PLAN

TOP SURFACE MUST BE VERY FLAT

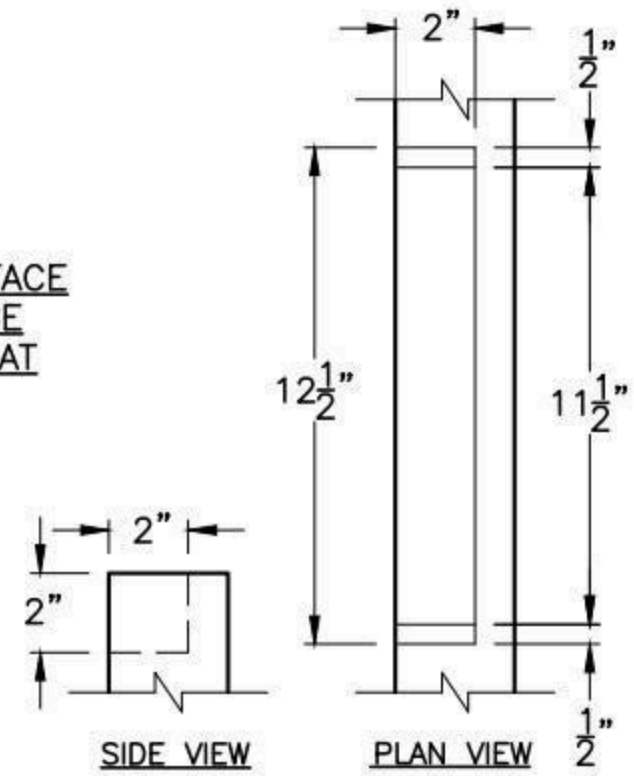

CHANNEL POCKET DETAIL

HANDLES MUST BE RECESSED

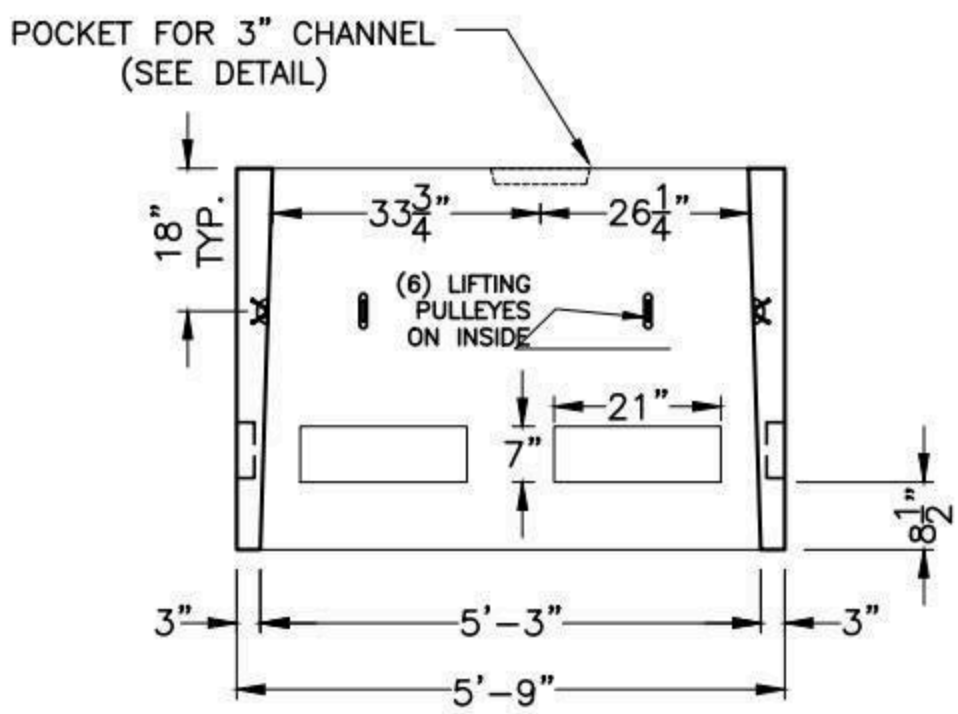

SECTION A-A

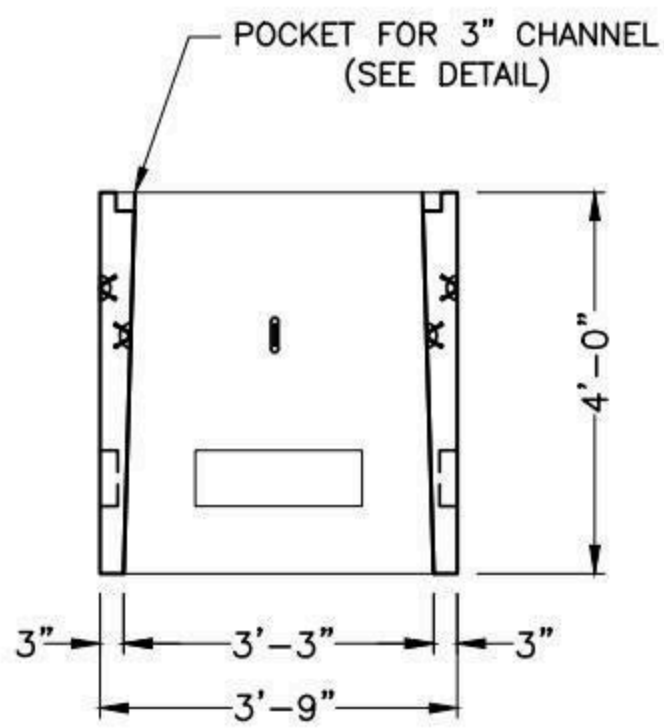

SECTION B-B

NOTES:
1. CONCRETE MINIMUM STRENGTH 4,000 PSI AFTER 28 DAYS.

SHEA PRODUCT ID: U2-3-15	FILE NAME: UNITIL 2-3-15.dwg		
WEIGHT (LBS): 4,500#	DRAWN BY: MNN	DATE: 01/11/2018	PAGE: VII.A.5

NPCA CERTIFIED PLANT

Specifications subject to change without notice

SHEA CONCRETE PRODUCTS
New England's Premier Precaster
800-696-7432 (SHEA)
www.sheaconcrete.com
MAILING ADDRESS: 87 HAVERHILL RD AMESBURY, MA 01913

UNITIL 2-3-16 THREE PHASE SECTIONALIZING PAD AND CABINET

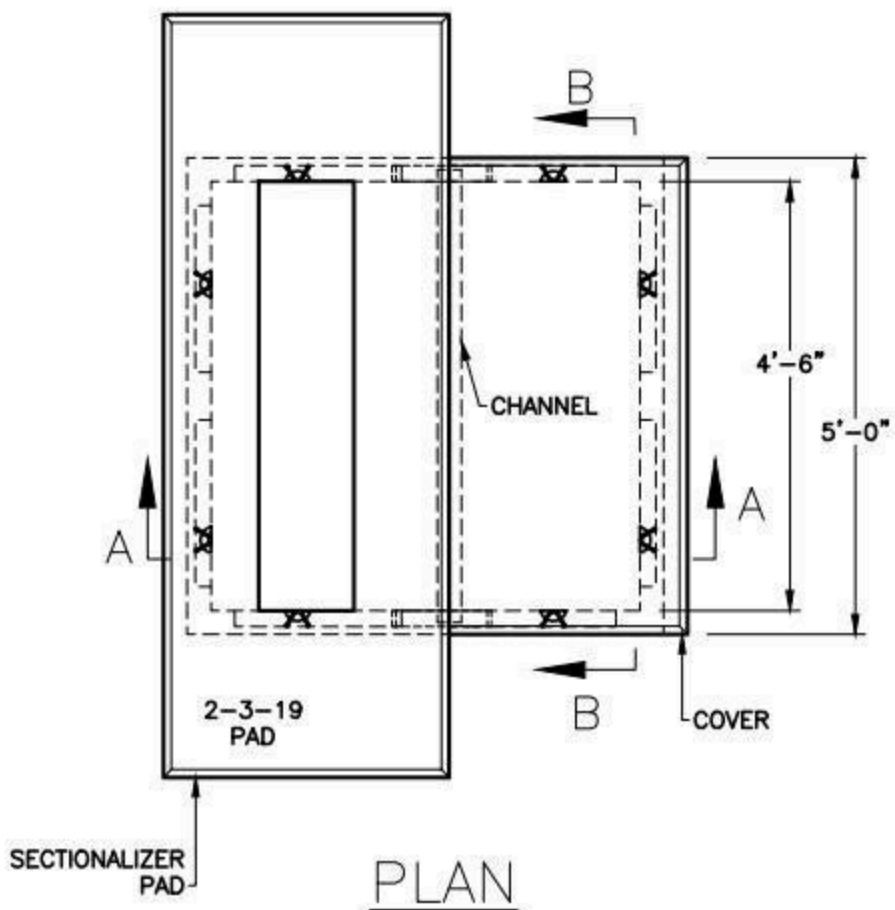

PLAN

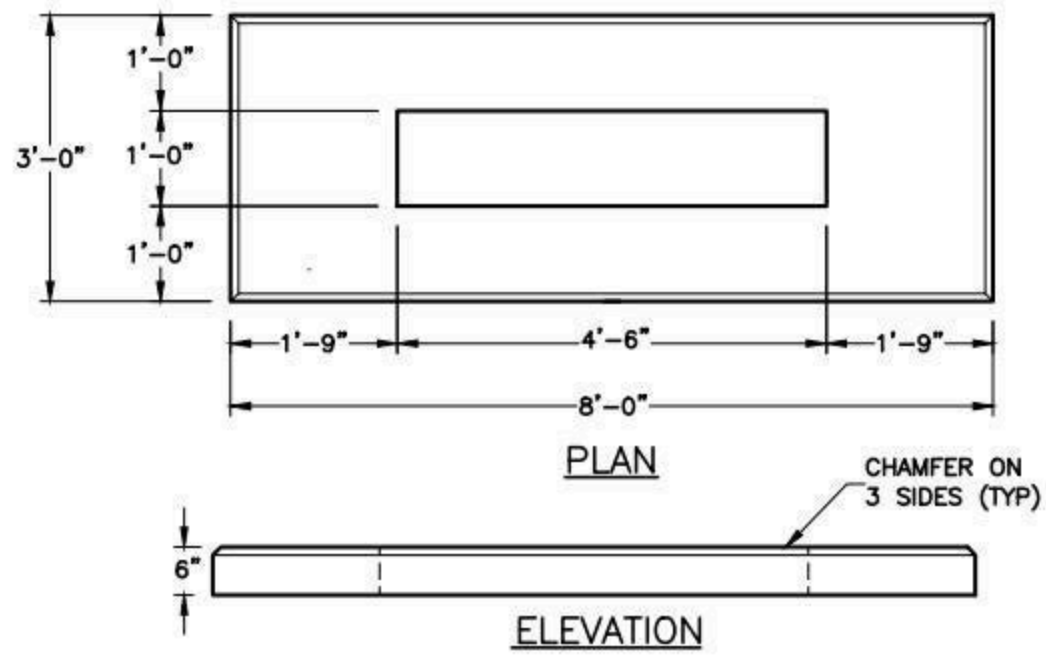

PLAN

ELEVATION

SECTIONALIZER PAD

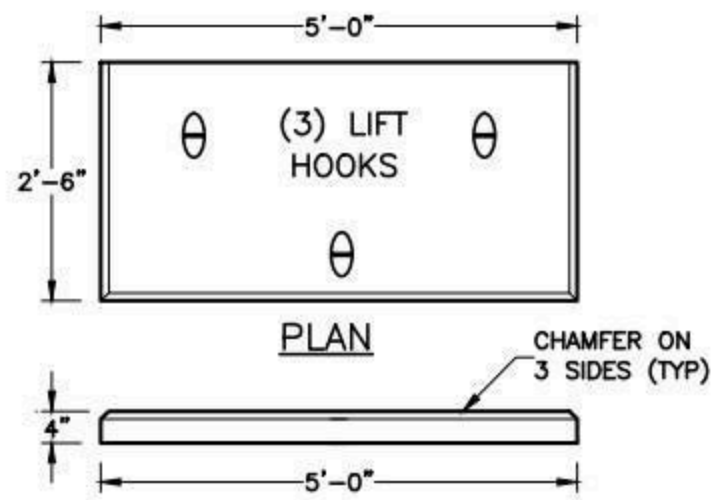

PLAN

ELEVATION

COVER

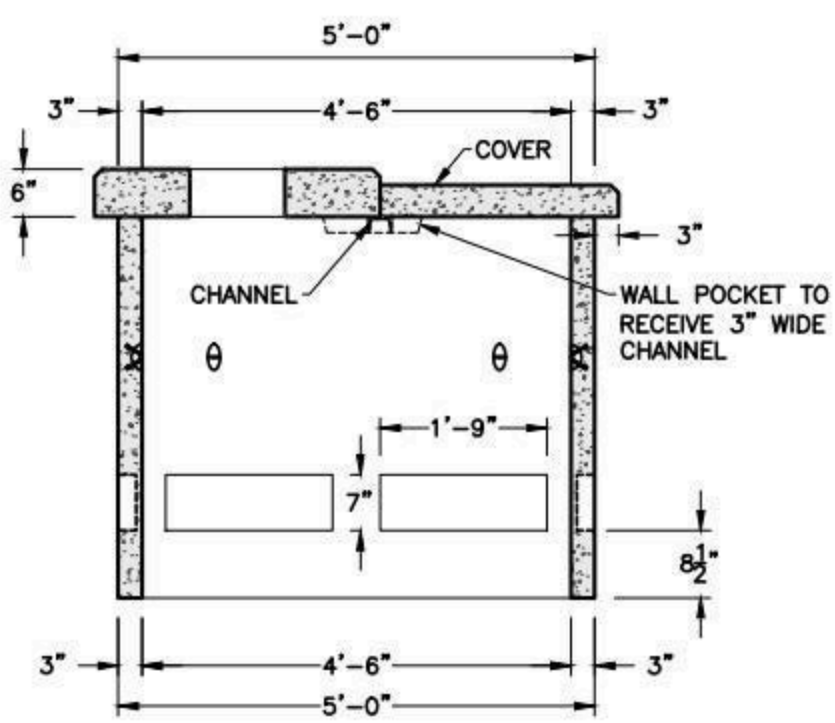

SECTION A-A

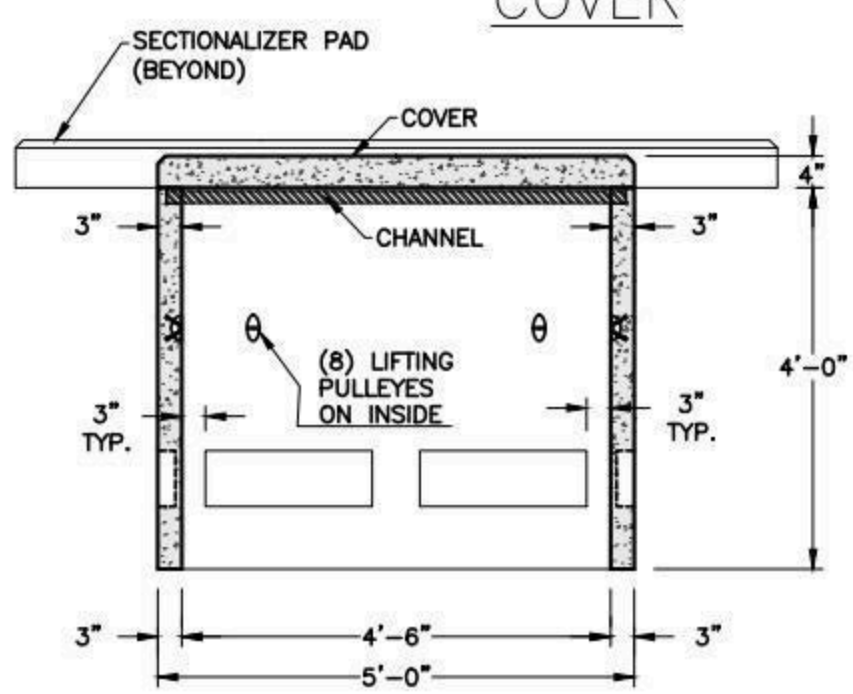

SECTION B-B

NOTES:

1. CONCRETE MINIMUM STRENGTH 4,000 PSI AFTER 28 DAYS.

SHEA PRODUCT ID: U2-3-16	FILE NAME: UNITIL 2-3-16.dwg		
WEIGHT (LBS): 4,500#	DRAWN BY: MNN	DATE: 01/11/2018	PAGE: VII.A.6

NPCA CERTIFIED PLANT

Specifications subject to change without notice

SHEA CONCRETE PRODUCTS
New England's Premier Precaster
800-696-7432 (SHEA)
www.sheaconcrete.com
MAILING ADDRESS: 87 HAVERHILL RD AMESBURY, MA 01913

BOSTON STANDARD LIGHT BASE 17" SQUARE X 60" TALL

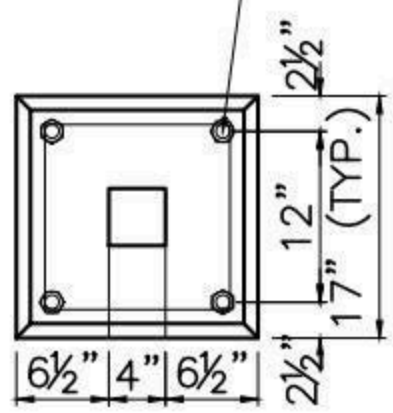

PLAN

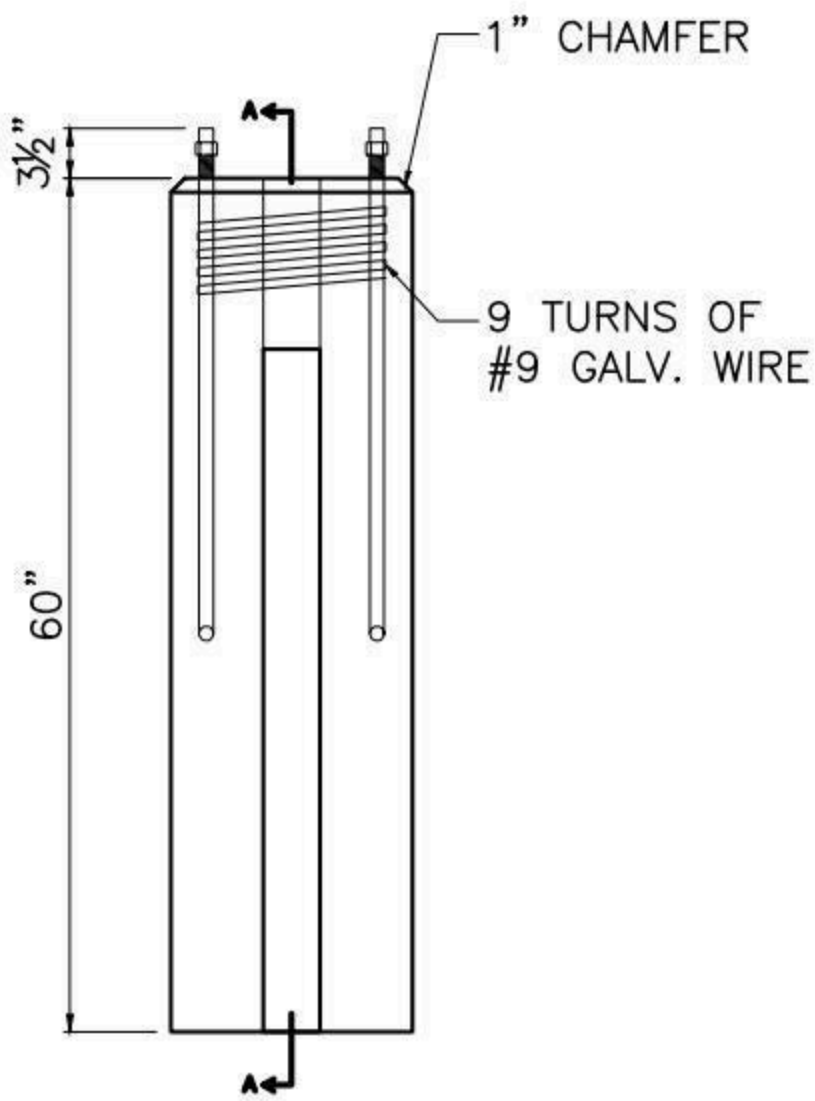

ELEVATION

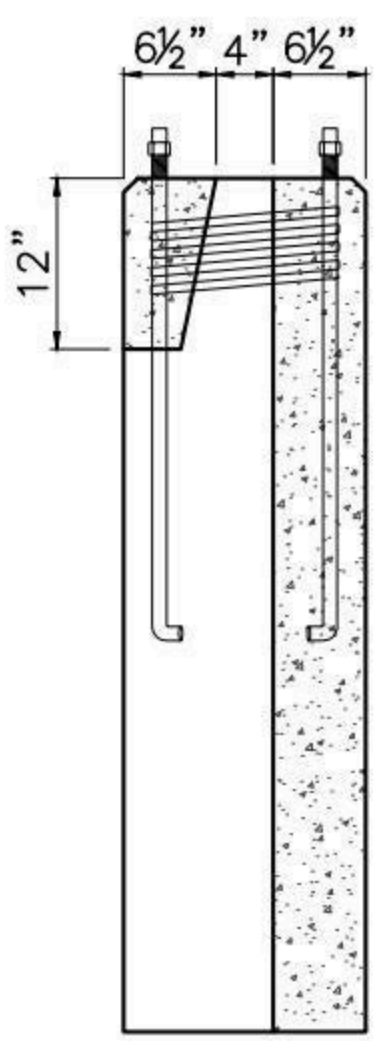

SECTION A–A

NOTES:

1. CONCRETE MINIMUM STRENGTH 5,000 PSI AFTER 28 DAYS.

SHEA PRODUCT ID: LPB17SQ	FILE NAME: BOS STD LPB		
WEIGHT (LBS): 1455	DRAWN BY: L.P.	DATE: 5/9/2018	PAGE: VIII.A.1

NPCA CERTIFIED PLANT

773 Salem Street–Wilmington, MA | 153 Cranberry Hwy–Rochester, MA | 87 Haverhill Road–Amesbury, MA | 160 Old Turnpike Rd–Nottingham, NH

Specifications subject to change without notice

SHEA CONCRETE PRODUCTS
New England's Premier Precaster
800-696-7432 (SHEA)
www.sheaconcrete.com
MAILING ADDRESS: 87 HAVERHILL RD AMESBURY, MA 01913

BOSTON STANDARD HANDHOLE 12" X 24" X 33"

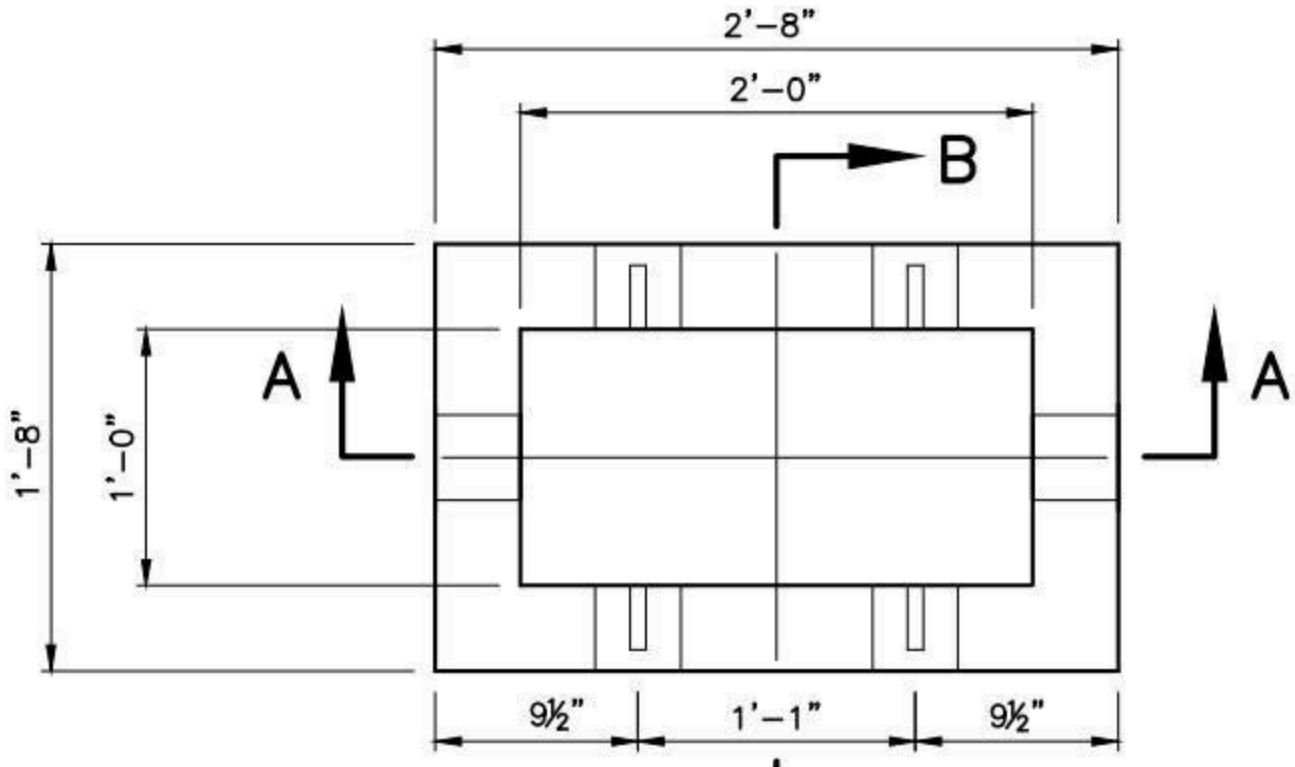

PLAN

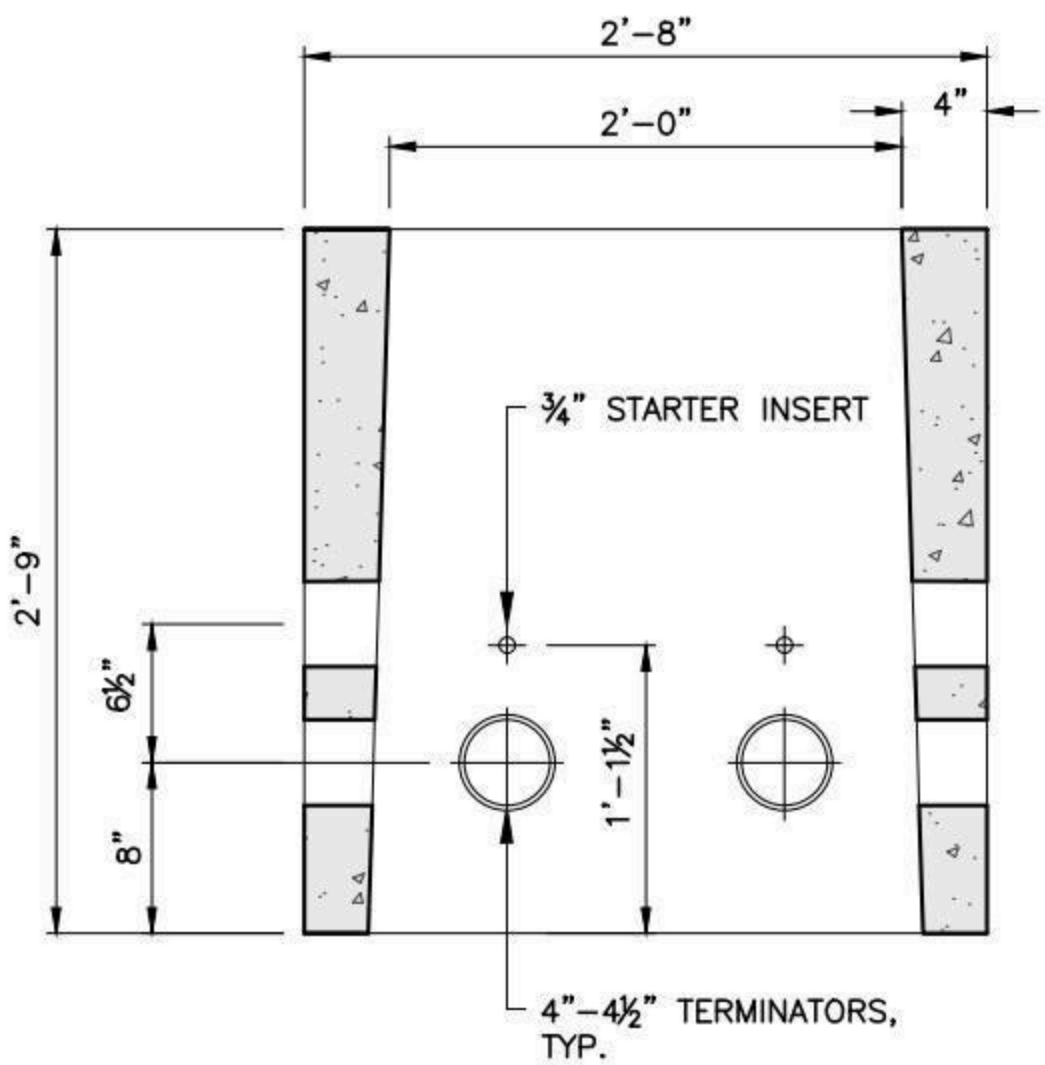

SECTION A-A

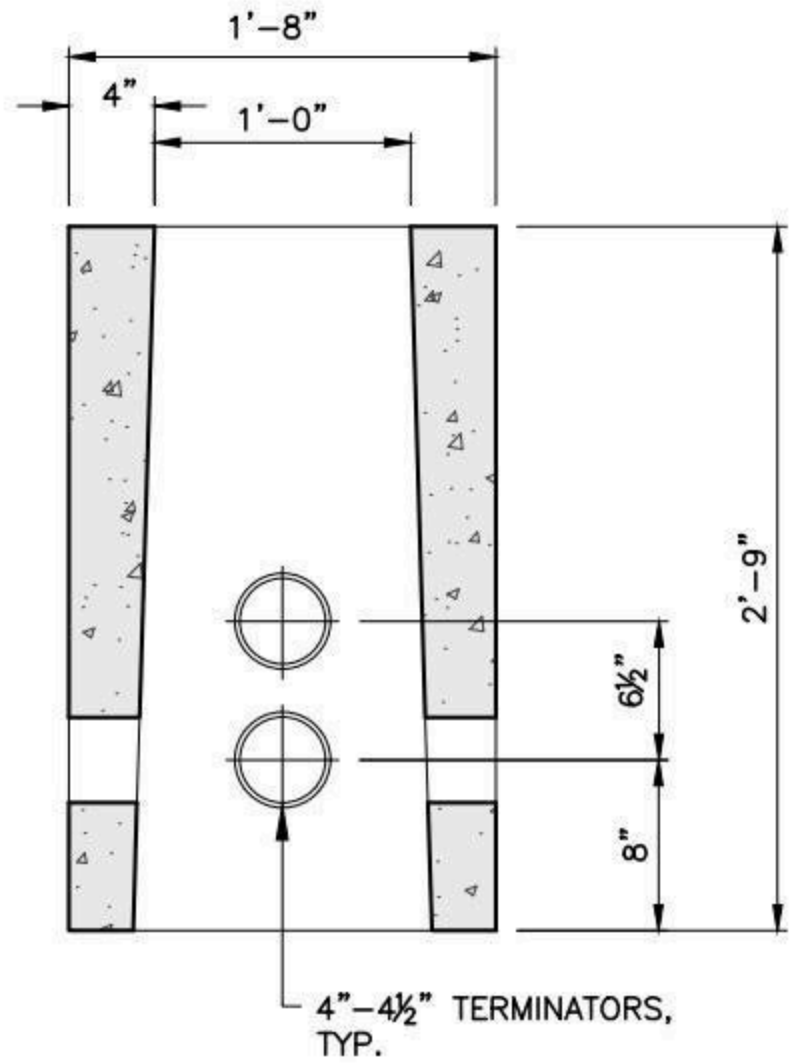

SECTION B-B

NOTES:

1. CONCRETE: 5,000 PSI MINIMUM AFTER 28 DAYS.
2. DESIGN LOADING: AASHTO HS20-44, 0 TO 5 FEET COVER.

SHEA PRODUCT ID: HH-12BOSSTD	FILE NAME: BOS STD 12X24 HH		
WEIGHT (LBS): 975	DRAWN BY: L.P.	DATE: 5/9/2018	PAGE: VIII.A.2

NPCA CERTIFIED PLANT

Specifications subject to change without notice

SHEA CONCRETE PRODUCTS
New England's Premier Precaster
800-696-7432 (SHEA)
www.sheaconcrete.com
MAILING ADDRESS: 87 HAVERHILL RD AMESBURY, MA 01913

BRAINTREE TRANSFORMER PAD
225-1500KVA 8' X 8' X 12"

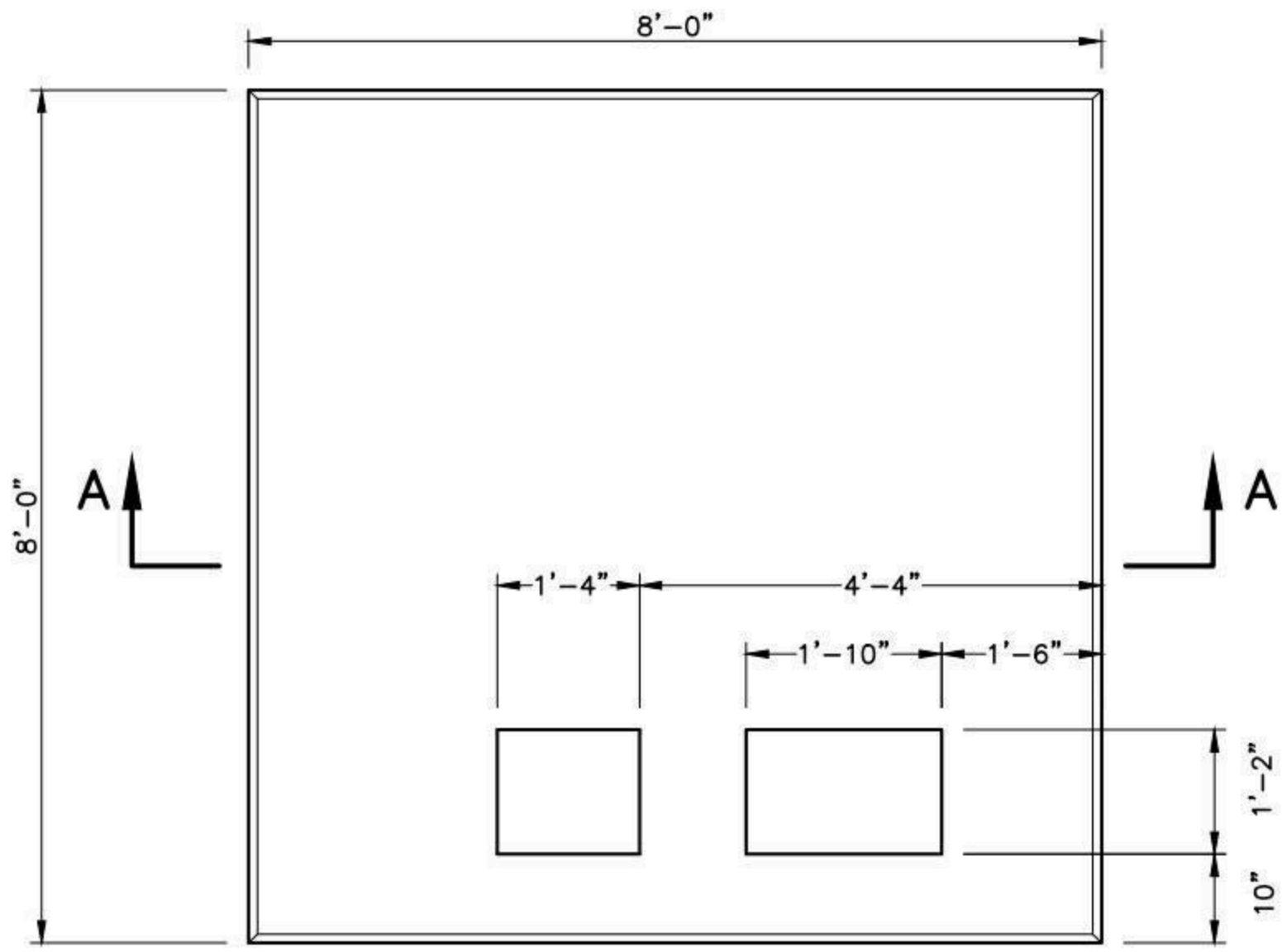

PLAN

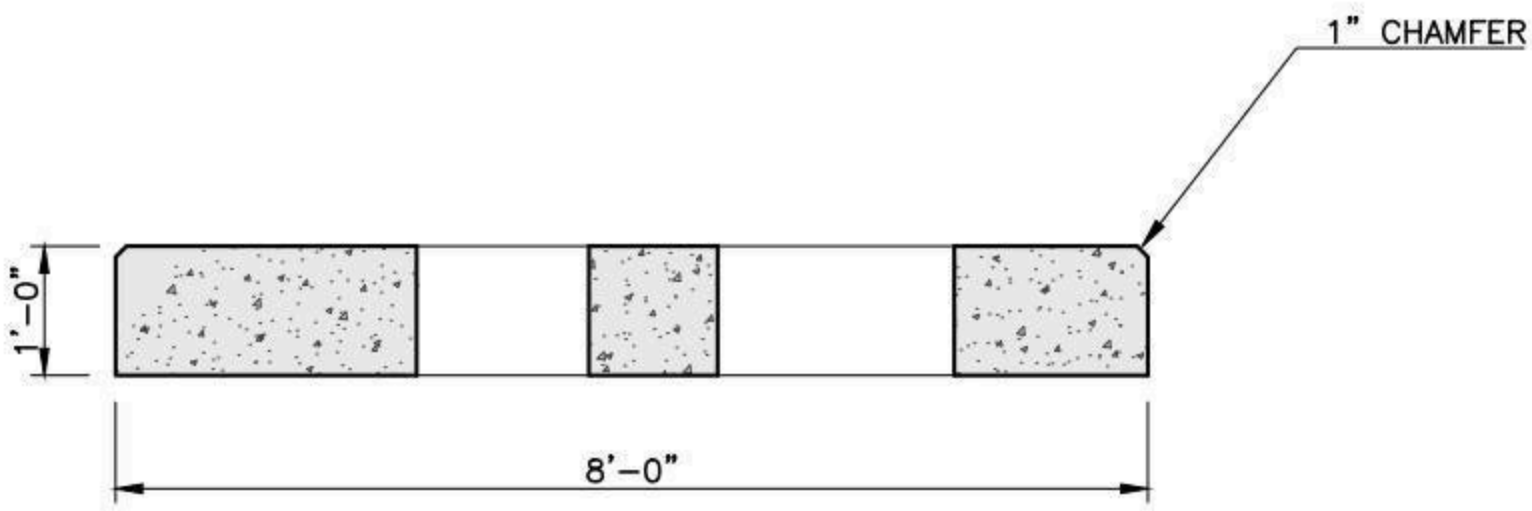

SECTION A-A

NOTES:

1. CONCRETE: 5,000 PSI MINIMUM AFTER 28 DAYS.
2. DESIGN LOADING: AASHTO HS20-44, 0 TO 5 FEET COVER.
3. DESIGN SPECIFICATIONS - ACI 318 & AASHTO LOAD FACTOR DESIGN METHOD.
4. STEEL REINFORCEMENT CONFORMS TO ASTM A615, GRADE 60. MINIMUM COVER 1"

SHEA PRODUCT ID: BELDTP88	FILE NAME: BELD 225-1500KVA			
WEIGHT (LBS): 9280	DRAWN BY: L.P.	DATE: 5/8/2018	PAGE: VIII.B.1	NPCA CERTIFIED PLANT

Specifications subject to change without notice

SHEA CONCRETE PRODUCTS
New England's Premier Precaster
800-696-7432 (SHEA)
www.sheaconcrete.com
MAILING ADDRESS: 87 HAVERHILL RD AMESBURY, MA 01913

BRAINTREE TRANSFORMER PAD
25-100KVA 4' X 4' X 12"

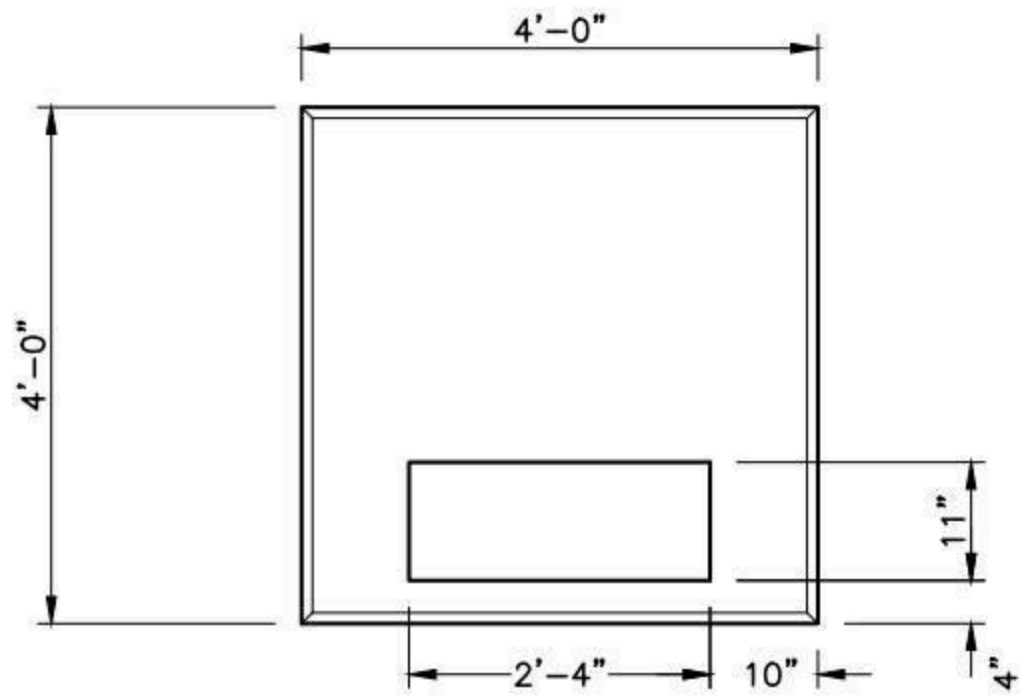

PLAN

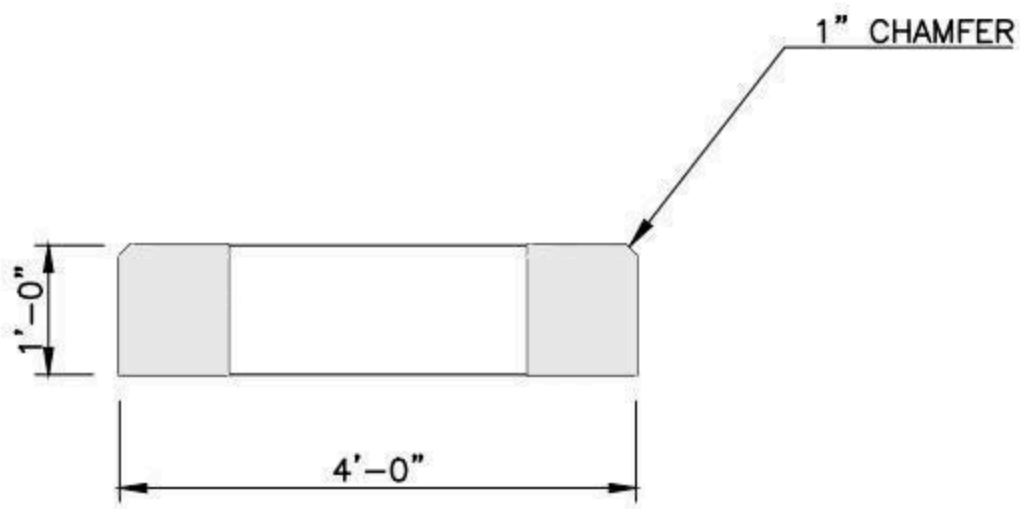

SECTION

NOTES:

1. CONCRETE: 5,000 PSI MINIMUM AFTER 28 DAYS.
2. DESIGN LOADING: AASHTO HS20-44, 0 TO 5 FEET COVER.
3. DESIGN SPECIFICATIONS – ACI 318 & AASHTO LOAD FACTOR DESIGN METHOD.
4. STEEL REINFORCEMENT CONFORMS TO ASTM A615, GRADE 60. MINIMUM COVER 1"

SHEA PRODUCT ID: BELD44	FILE NAME: BELD 25-100KVA			NPCA CERTIFIED PLANT
WEIGHT (LBS): 2320	DRAWN BY: L.P.	DATE: 5/8/2018	PAGE: VIII.B.2	

Specifications subject to change without notice

SHEA CONCRETE PRODUCTS
New England's Premier Precaster
800-696-7432 (SHEA)
www.sheaconcrete.com
MAILING ADDRESS: 87 HAVERHILL RD AMESBURY, MA 01913

CONCORD TRANSFORMER PAD
225 & 300KVA 82" X 96" X 10"

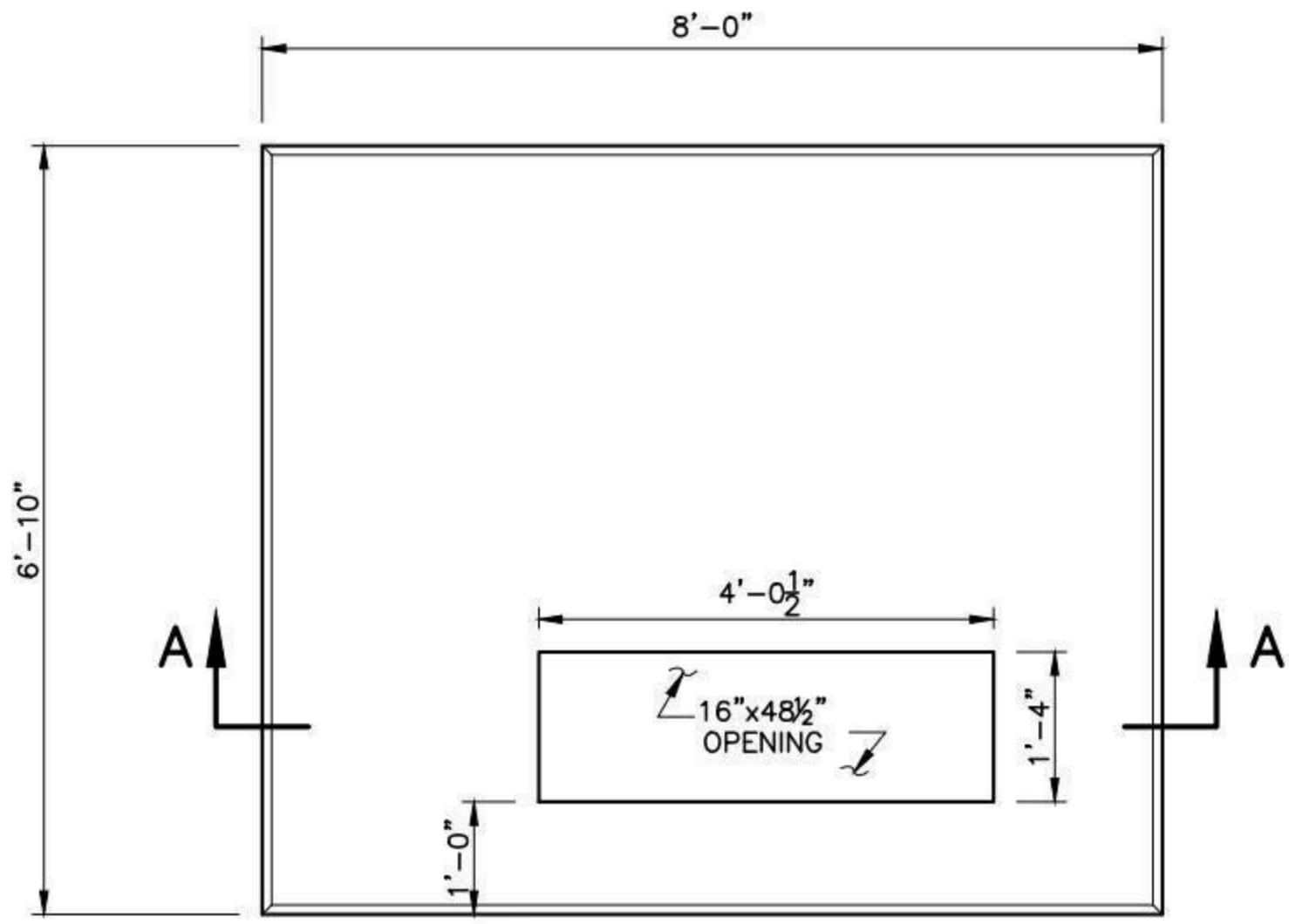

PLAN

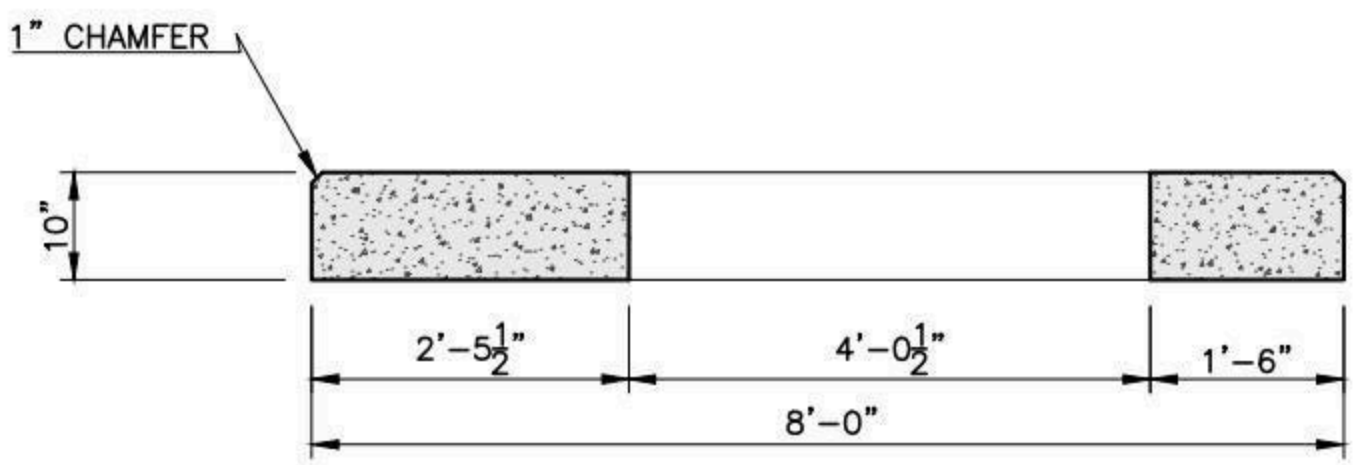

SECTION A-A

NOTES:

1. CONCRETE: 5,000 PSI MINIMUM AFTER 28 DAYS.
2. DESIGN LOADING: AASHTO HS20-44, 0 TO 5 FEET COVER.
3. DESIGN SPECIFICATIONS – ACI 318 & AASHTO LOAD FACTOR DESIGN METHOD.
4. STEEL REINFORCEMENT CONFORMS TO ASTM A615, GRADE 60. MINIMUM COVER 1"

SHEA PRODUCT ID: CMLTP82X96	FILE NAME: CMLP 300KVA		
WEIGHT (LBS): 6605	DRAWN BY: L.P.	DATE: 5/8/2018	PAGE: VIII.C.1

NPCA CERTIFIED PLANT

Specifications subject to change without notice

SHEA CONCRETE PRODUCTS
New England's Premier Precaster
800-696-7432 (SHEA)
www.sheaconcrete.com
MAILING ADDRESS: 87 HAVERHILL RD AMESBURY, MA 01913

HINGHAM TAPERED LIGHT BASE FE-9 17" TO 22" X 40" TALL

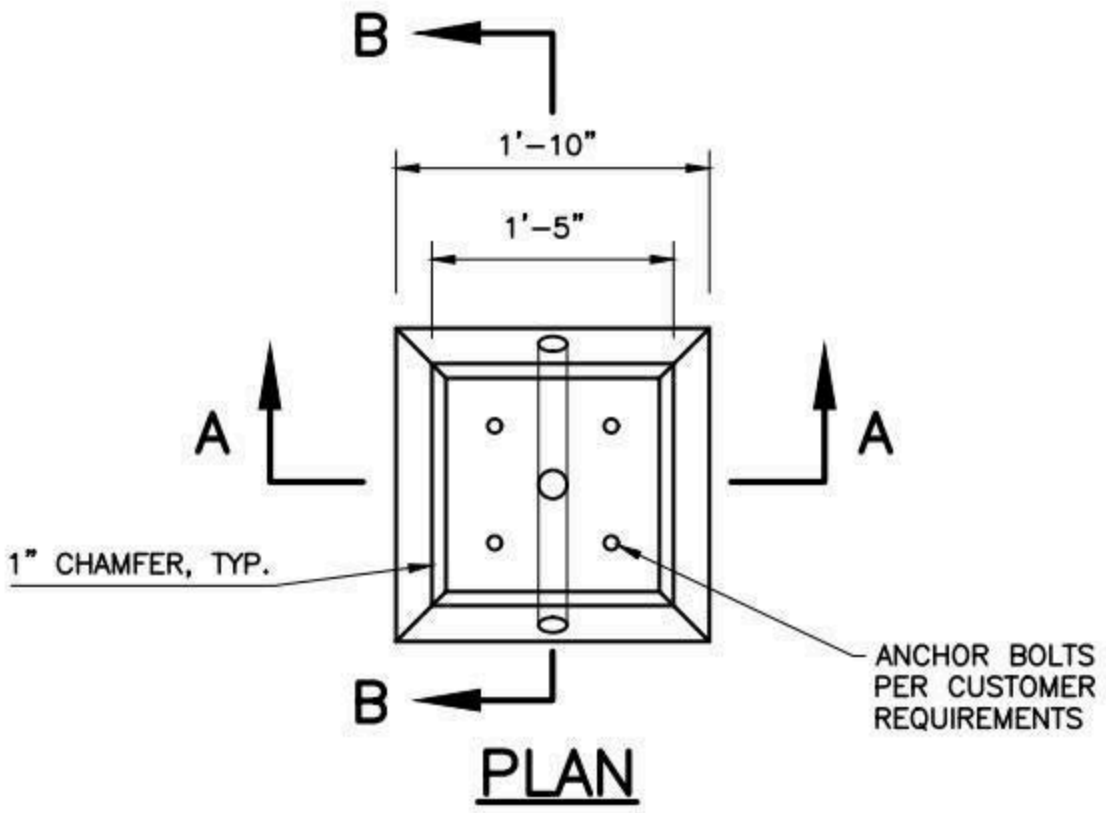

PLAN

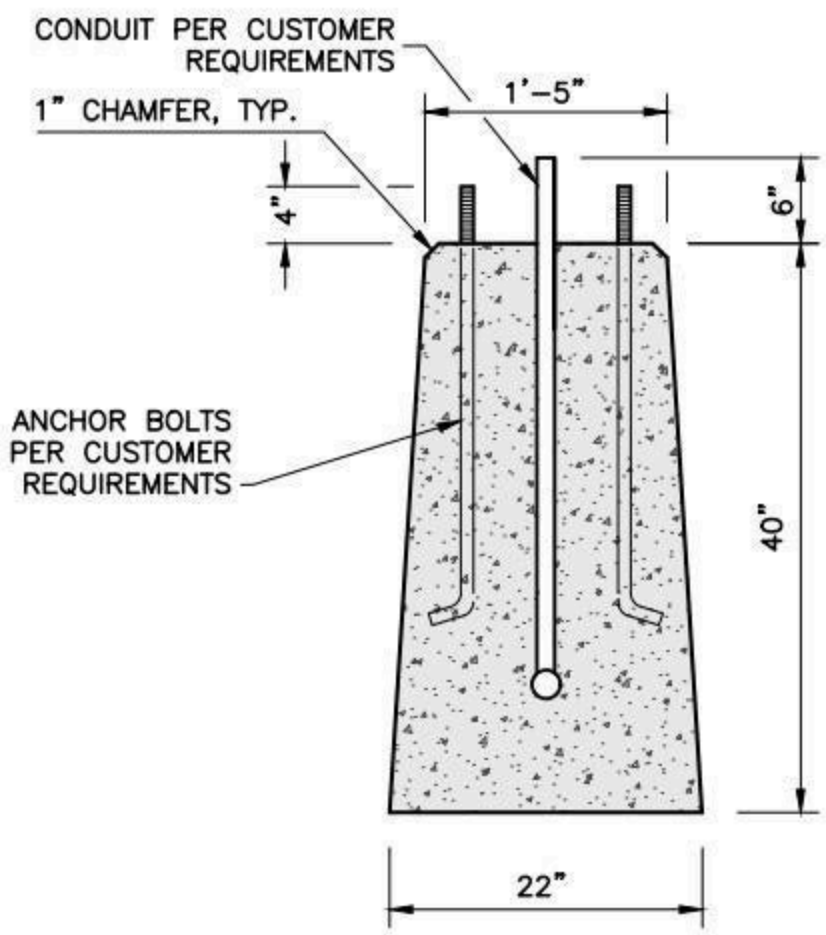

SECTION A-A

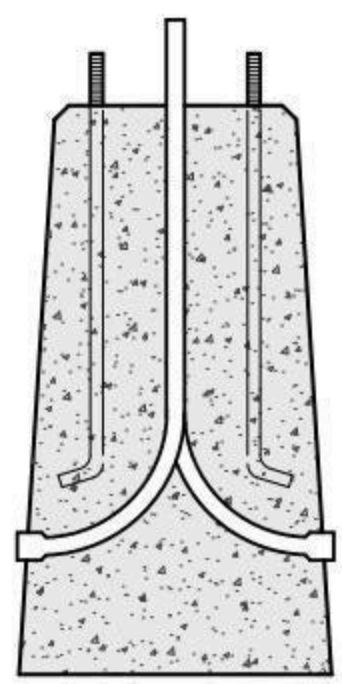

SECTION B-B

NOTES:

1. CONCRETE MINIMUM STRENGTH 5,000 PSI AFTER 28 DAYS.

SHEA PRODUCT ID: LPB17SQX40T	FILE NAME: HINGHAM FE-9		
WEIGHT (LBS): 1625	DRAWN BY: L.P.	DATE: 5/9/2018	PAGE: VIII.D.1

NPCA CERTIFIED PLANT

773 Salem Street-Wilmington, MA | 153 Cranberry Hwy-Rochester, MA | 87 Haverhill Road-Amesbury, MA | 160 Old Turnpike Rd-Nottingham, NH

Specifications subject to change without notice

SHEA CONCRETE PRODUCTS
New England's Premier Precaster
800-696-7432 (SHEA)
www.sheaconcrete.com
MAILING ADDRESS: 87 HAVERHILL RD AMESBURY, MA 01913

MASSDOT MANHOLE SD2.012 4' X 4' X 5'

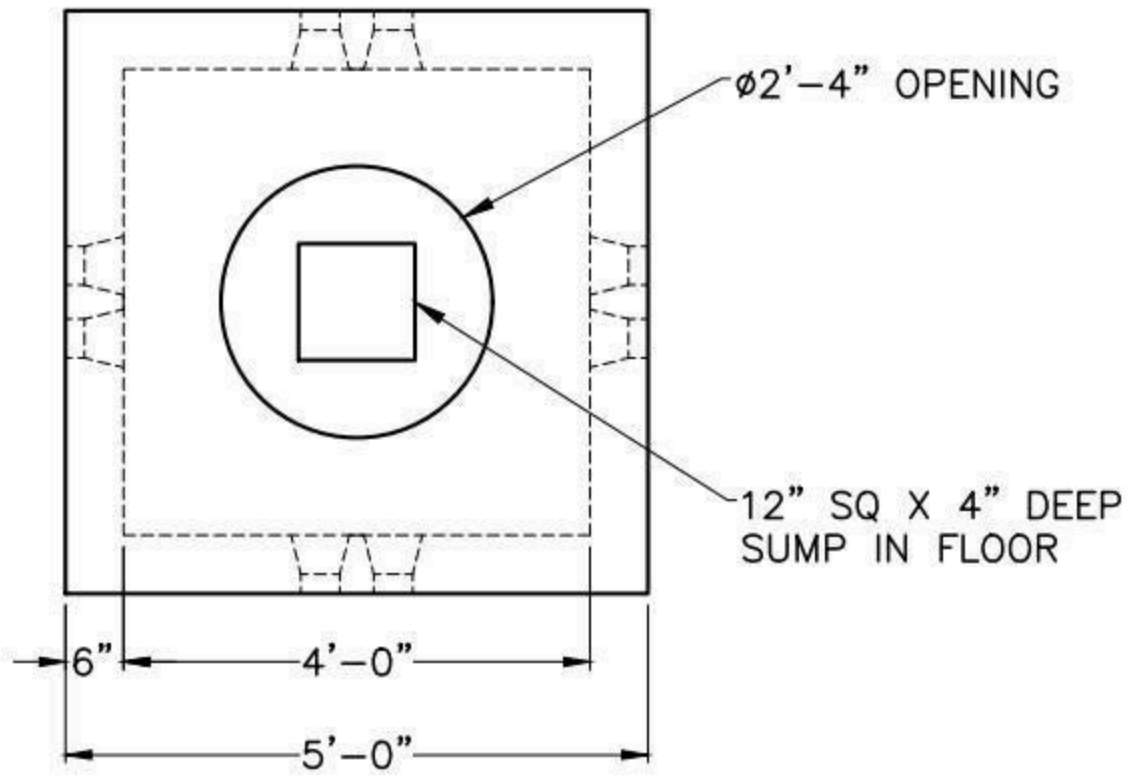

PLAN

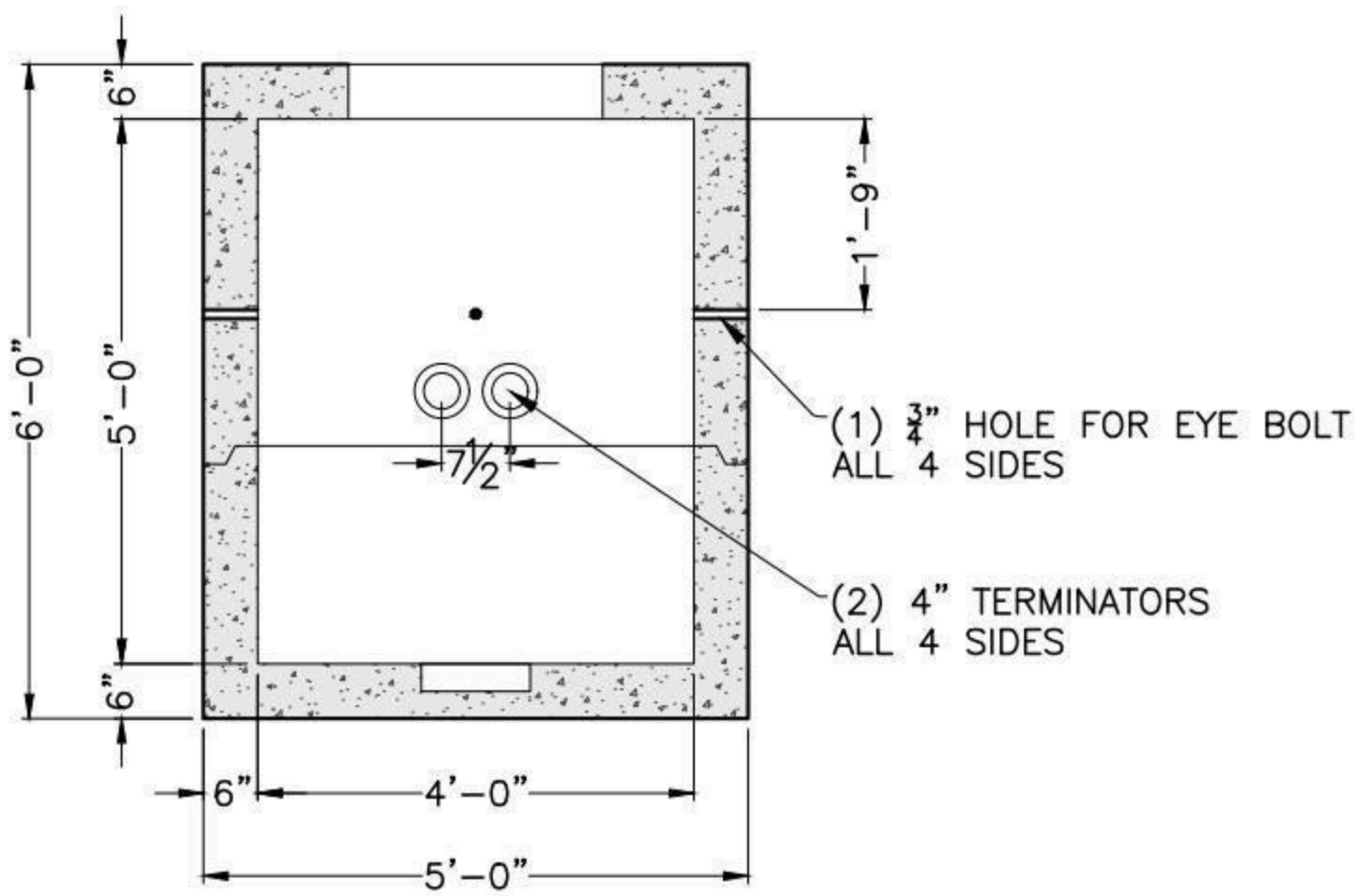

SECTION

NOTES:

1. CONCRETE: 5,000 PSI MINIMUM AFTER 28 DAYS.
2. DESIGN LOADING: AASHTO HS20-44, 0 TO 5 FEET COVER.
3. MEETS MADOT STANDARDS.

SHEA PRODUCT ID: HH-445MA	FILE NAME: SD2.012		
WEIGHT (LBS): 10150	DRAWN BY: L.P.	DATE: 5/9/2018	PAGE: VIII.E.1

NPCA CERTIFIED PLANT

773 Salem Street-Wilmington, MA | 153 Cranberry Hwy-Rochester, MA | 87 Haverhill Road-Amesbury, MA | 160 Old Turnpike Rd-Nottingham, NH

Specifications subject to change without notice

SHEA CONCRETE PRODUCTS
New England's Premier Precaster
800-696-7432 (SHEA)
www.sheaconcrete.com
MAILING ADDRESS: 87 HAVERHILL RD AMESBURY, MA 01913

MASSDOT HANDHOLE SD2.022 13" X 24"

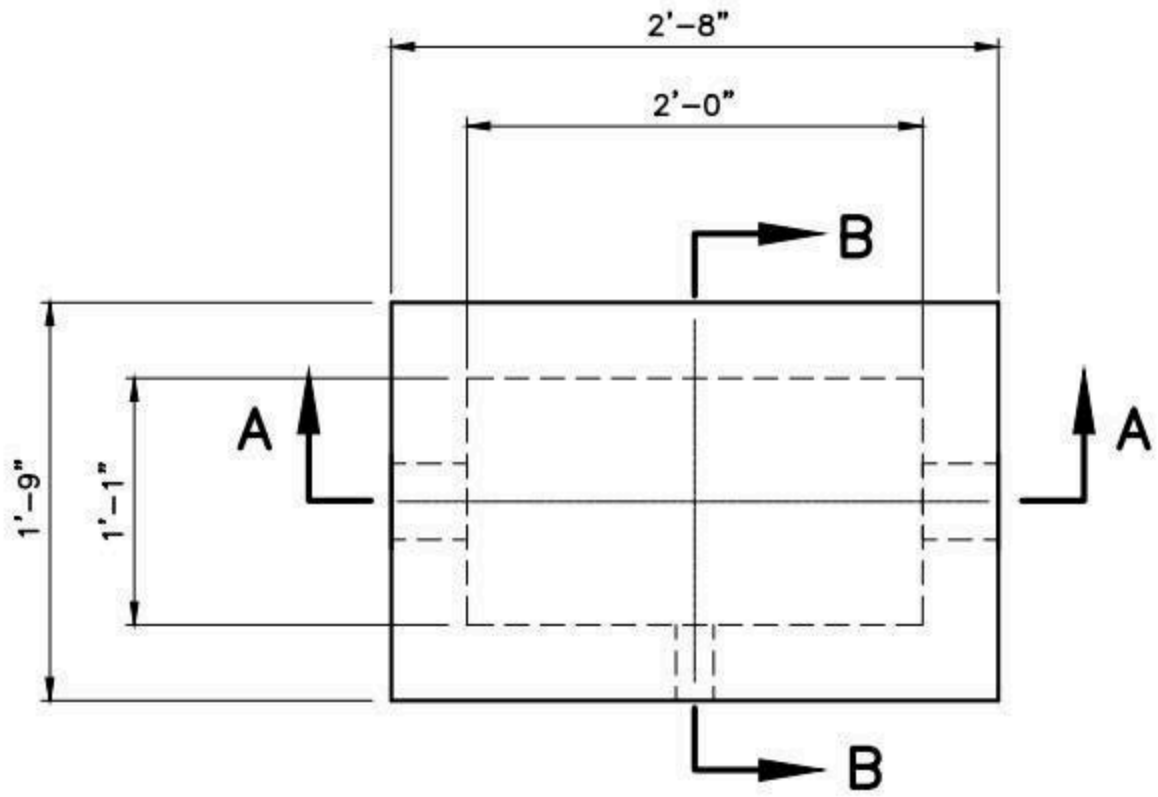

PLAN

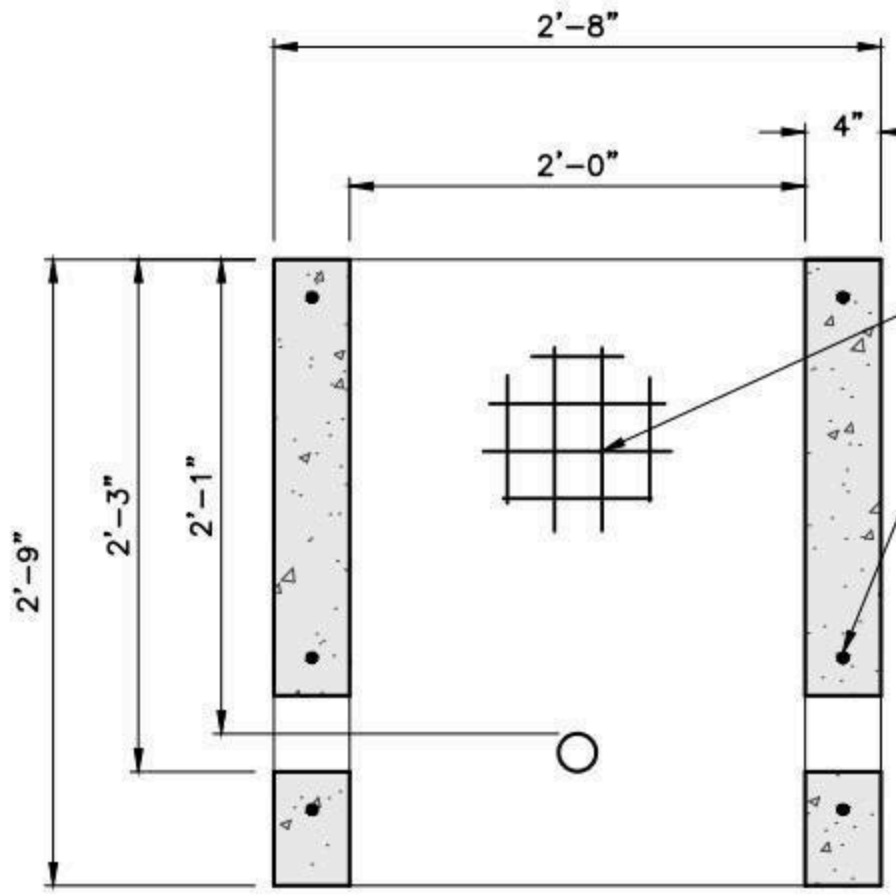

SECTION A-A

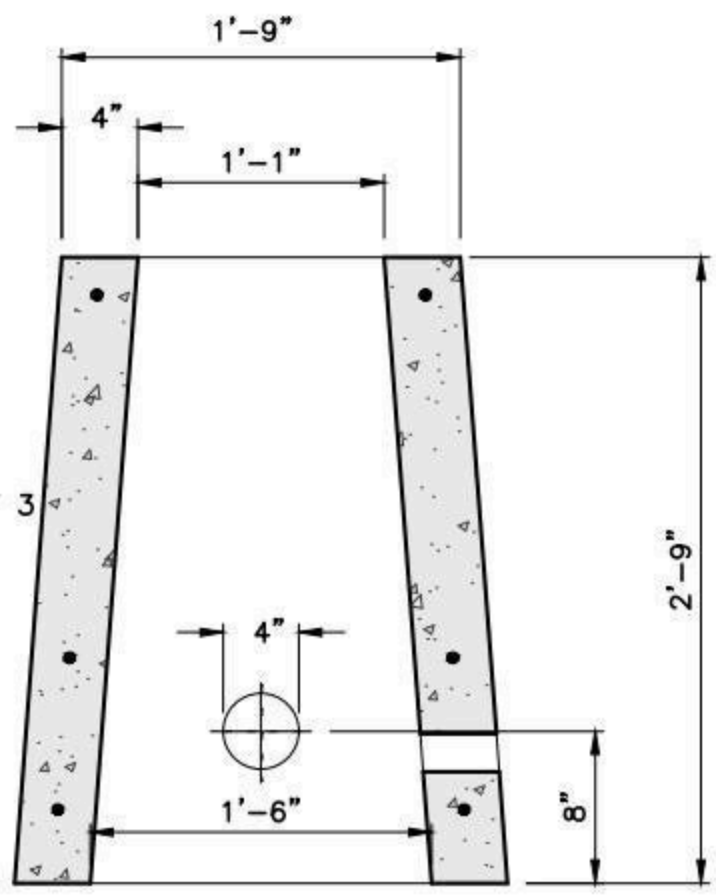

SECTION B-B

NOTES:

1. CONCRETE: 5,000 PSI MINIMUM AFTER 28 DAYS.
2. DESIGN LOADING: AASHTO HS20-44, 0 TO 5 FEET COVER.
3. MEETS MADOT STANDARDS.

SHEA PRODUCT ID: HH-1324MA	FILE NAME: SD2.022		
WEIGHT (LBS): 1000	DRAWN BY: L.P.	DATE: 5/9/2018	PAGE: VIII.E.2

NPCA CERTIFIED PLANT

Specifications subject to change without notice

SHEA CONCRETE PRODUCTS
New England's Premier Precaster
800-696-7432 (SHEA)
www.sheaconcrete.com
MAILING ADDRESS: 87 HAVERHILL RD AMESBURY, MA 01913

MASSDOT HANDHOLE SD2.023 24" X 24"

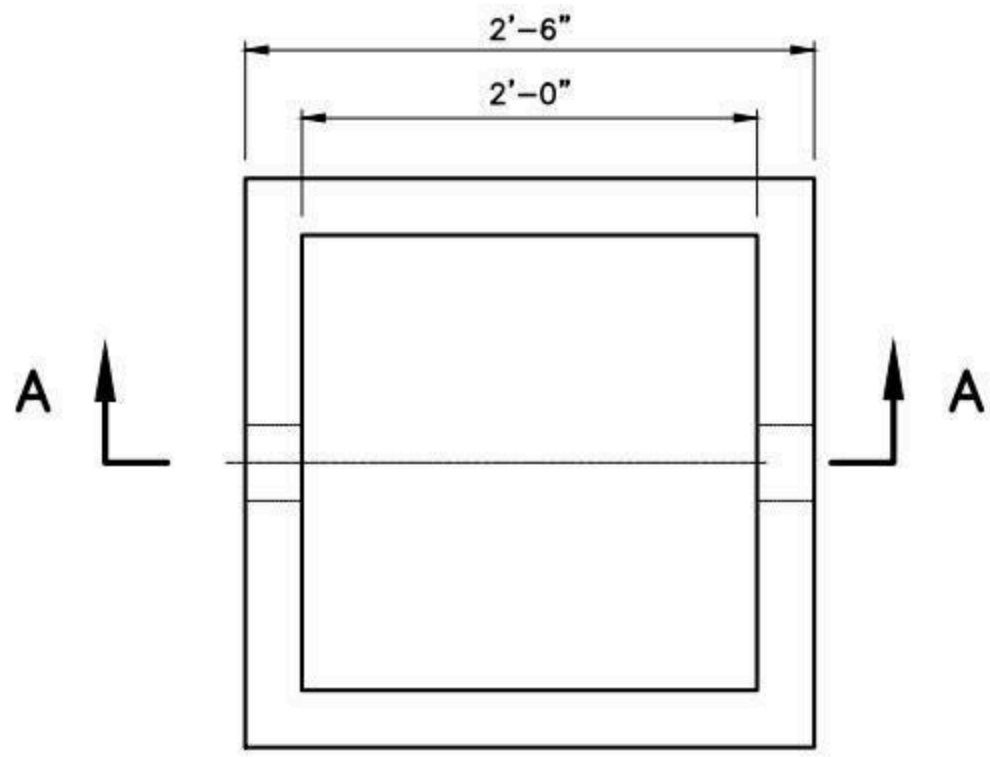

PLAN

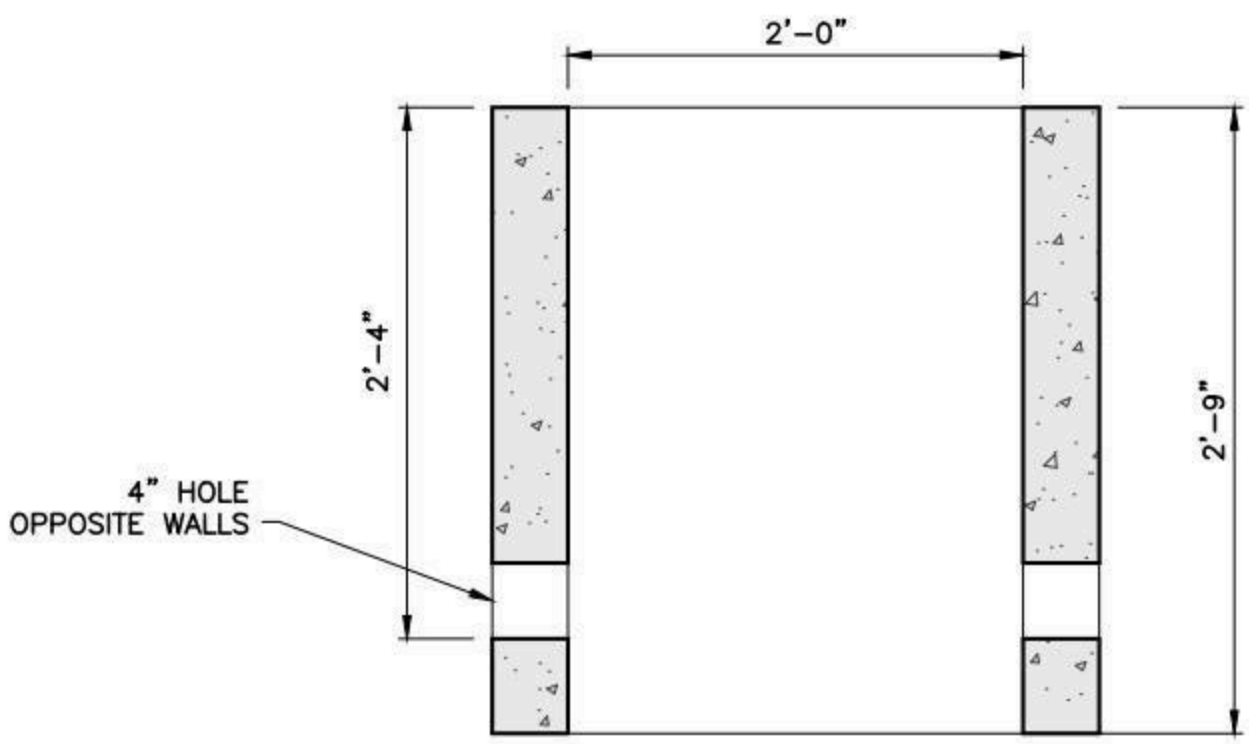

SECTION A-A

OPPOSITE WALLS SIMILAR

NOTES:

1. CONCRETE: 5,000 PSI MINIMUM AFTER 28 DAYS.
2. DESIGN LOADING: AASHTO HS20-44, 0 TO 5 FEET COVER.
3. MEETS MADOT STANDARDS.

SHEA PRODUCT ID: HH-2424MA	FILE NAME: SD2.023		
WEIGHT (LBS): 900	DRAWN BY: L.P.	DATE: 5/9/2018	PAGE: VIII.E.3

NPCA CERTIFIED PLANT

Specifications subject to change without notice

SHEA CONCRETE PRODUCTS
New England's Premier Precaster
800-696-7432 (SHEA)
www.sheaconcrete.com
MAILING ADDRESS: 87 HAVERHILL RD AMESBURY, MA 01913

MASSDOT PULLBOX SD2.030 8" X 23"

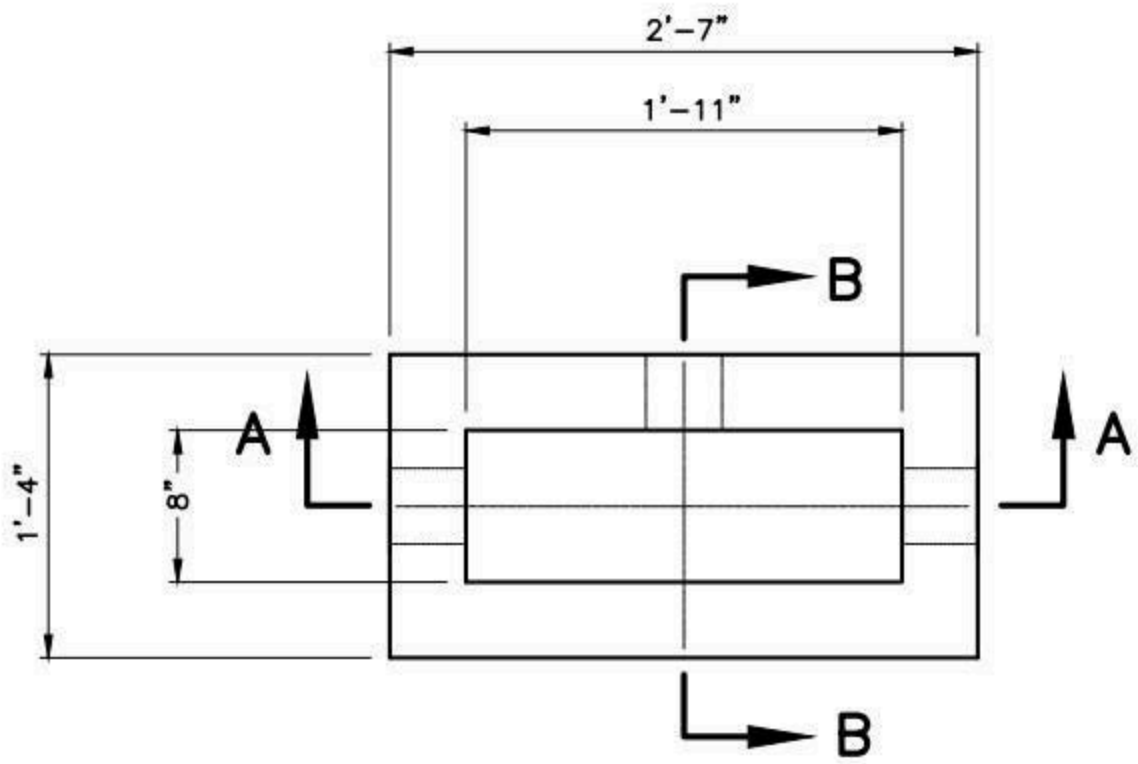

PLAN

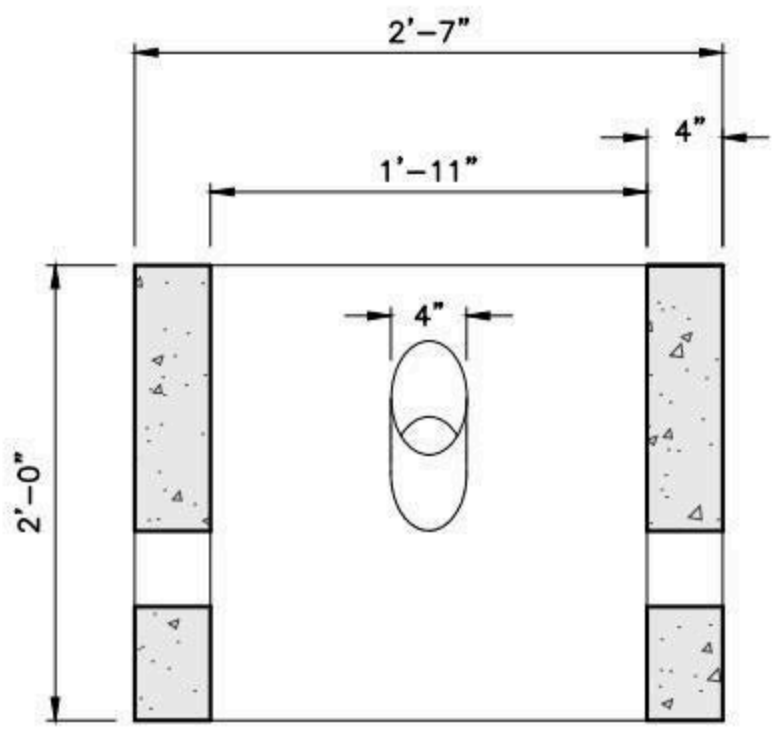

SECTION A-A

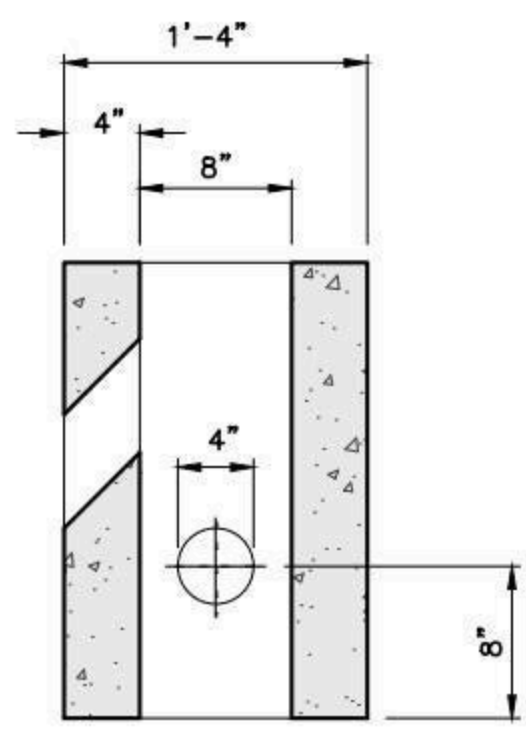

SECTION B-B

NOTES:

1. CONCRETE: 5,000 PSI MINIMUM AFTER 28 DAYS.
2. DESIGN LOADING: AASHTO HS20-44, 0 TO 5 FEET COVER.
3. MEETS MADOT STANDARDS.

SHEA PRODUCT ID: PB-823MA	FILE NAME: SD2.030		
WEIGHT (LBS): 630	DRAWN BY: L.P.	DATE: 5/9/2018	PAGE: VIII.E.4

NPCA CERTIFIED PLANT

Specifications subject to change without notice

SHEA CONCRETE PRODUCTS
New England's Premier Precaster
800-696-7432 (SHEA)
www.sheaconcrete.com
MAILING ADDRESS: 87 HAVERHILL RD AMESBURY, MA 01913

MASS DOT SIGNAL FOUNDATION SD3.030 20" SQ X 30" TALL

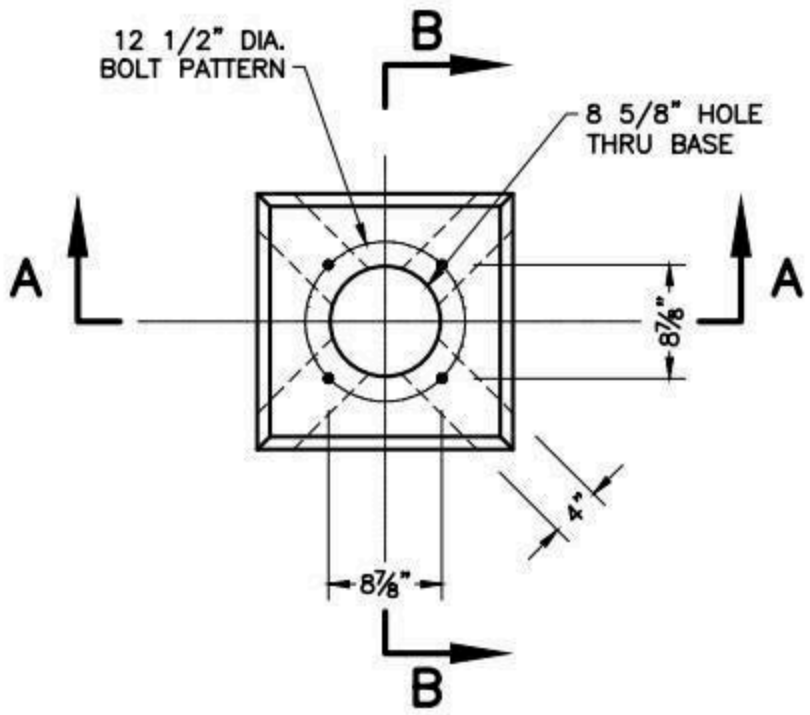

PLAN

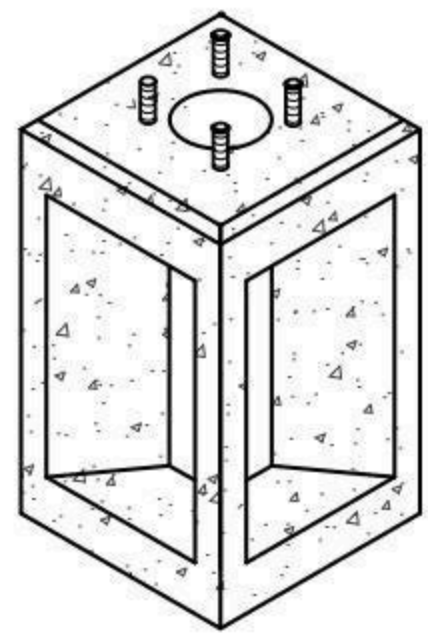

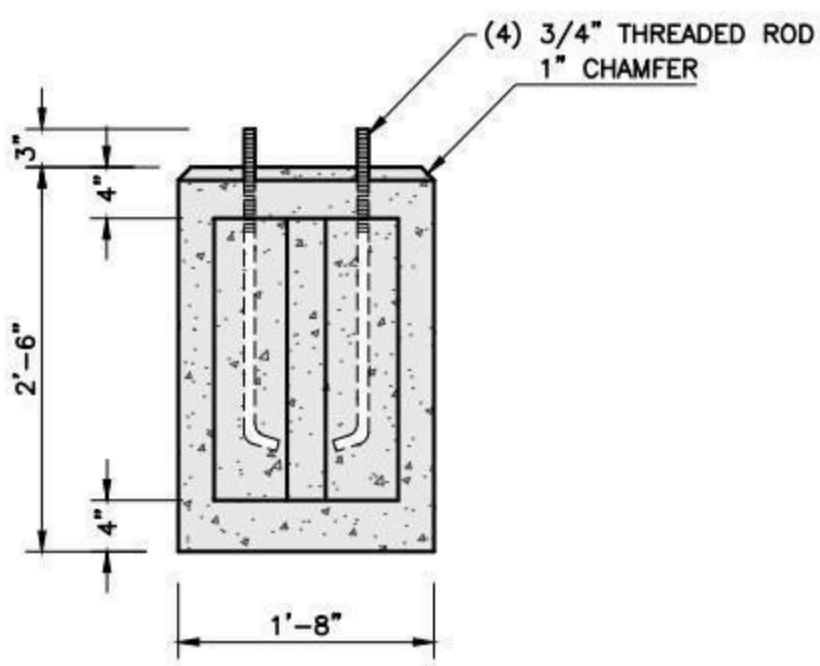

SECTION A-A

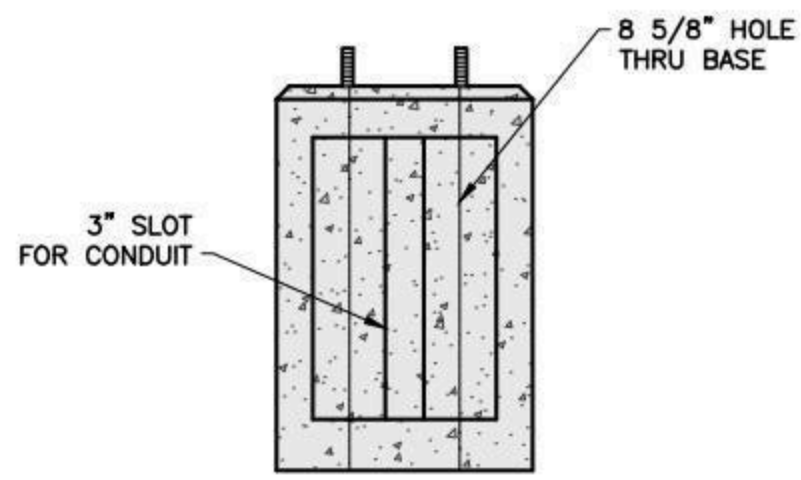

SECTION B-B

NOTES:

1. CONCRETE: 5,000 PSI MINIMUM AFTER 28 DAYS.
2. MEETS MADOT STANDARDS.

SHEA PRODUCT ID: SPF2020	FILE NAME: SD3.030			NPCA CERTIFIED PLANT
WEIGHT (LBS): 1010	DRAWN BY: L.P.	DATE: 5/10/2018	PAGE: VIII.E.5	

Specifications subject to change without notice

SHEA CONCRETE PRODUCTS
New England's Premier Precaster
800-696-7432 (SHEA)
www.sheaconcrete.com
MAILING ADDRESS: 87 HAVERHILL RD AMESBURY, MA 01913

NORWOOD LIGHT
MANHOLE 6' X 10' X 6'

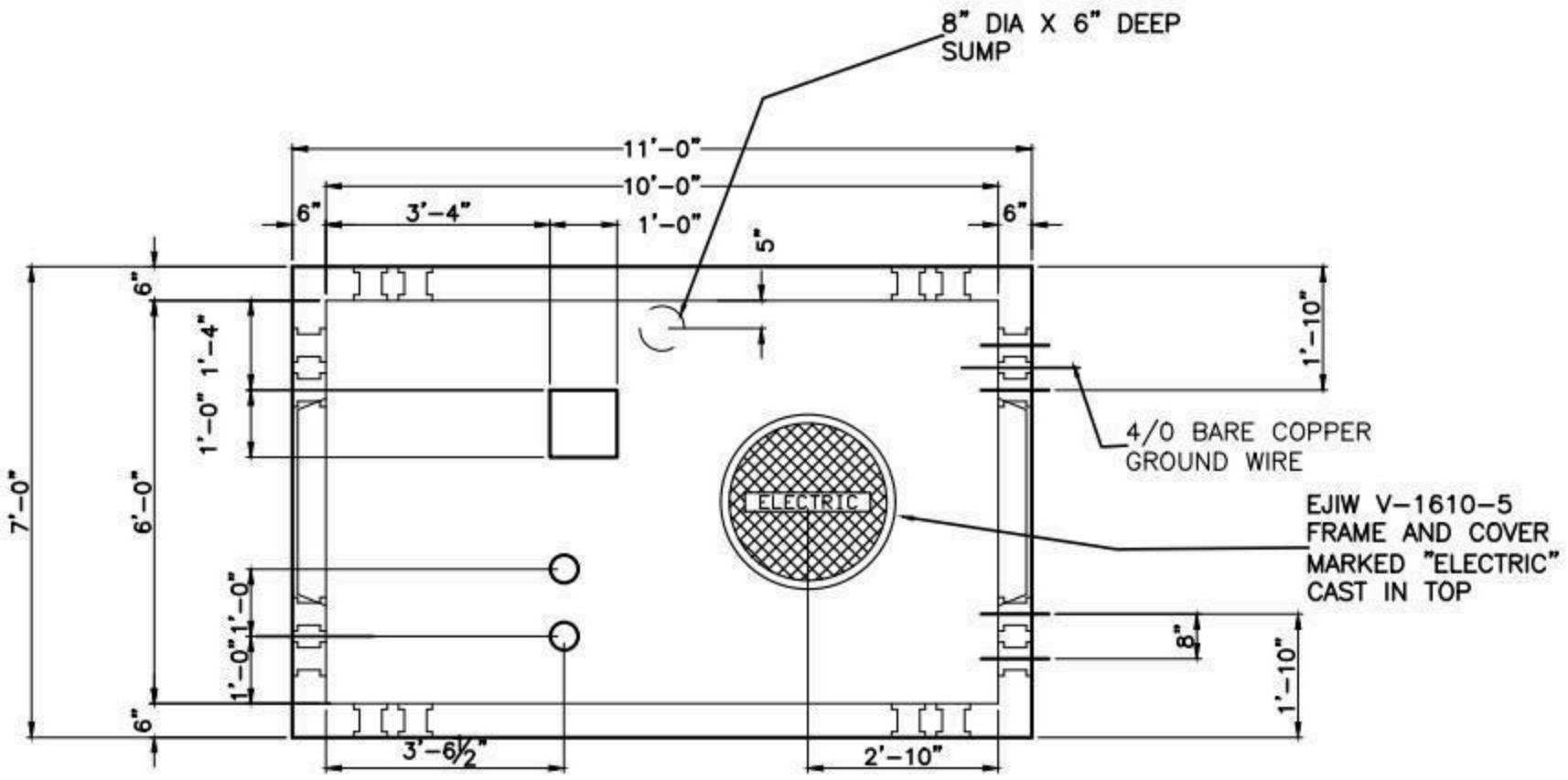

PLAN VIEW

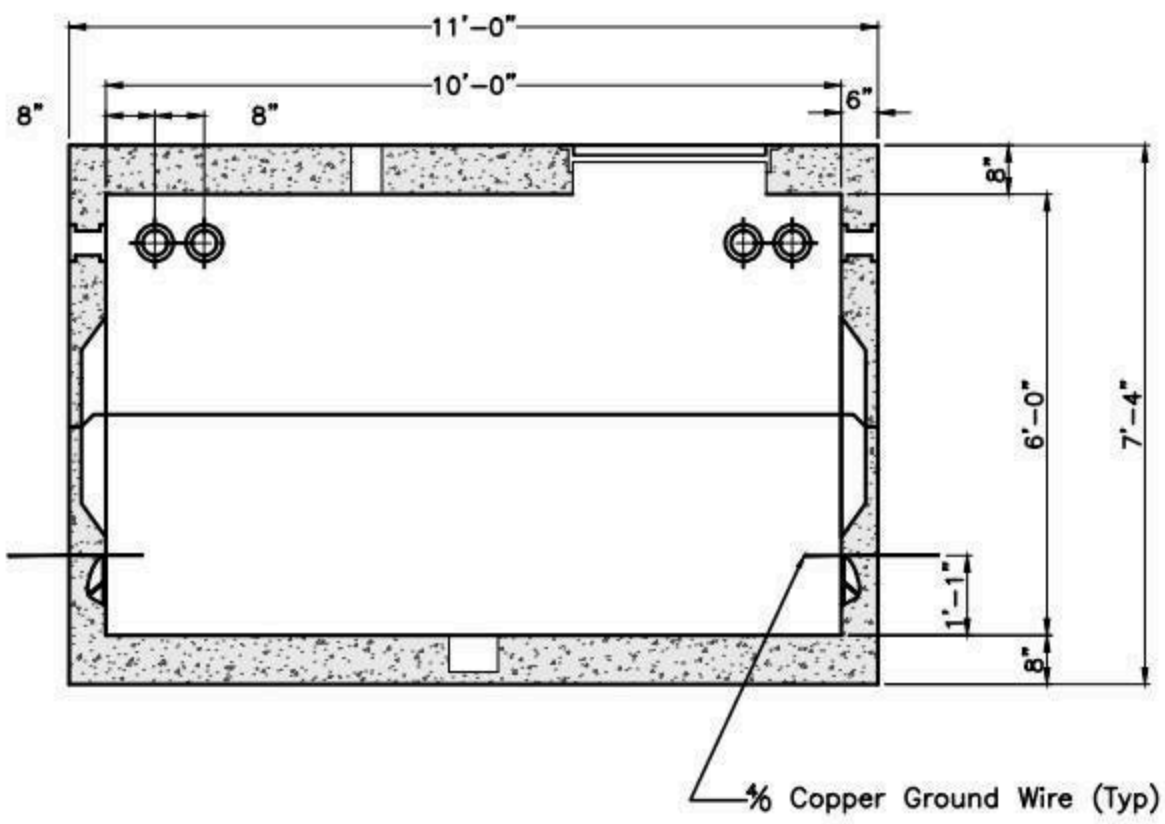

SECTION VIEW

OPPOSITE WALLS ARE MIRROR IMAGES.

NOTES:

1. CONCRETE 5,000 PSI MINIMUM STRENGTH AFTER 28 DAYS.
2. DESIGN LOADING: AASHTO HS20-44, 0 TO 5 FEET COVER.
3. STEEL REINFORCEMENT CONFORMS TO ASTM A615, GRADE 60.
4. MINIMUM STEEL COVER 1".

SHEA PRODUCT ID: MH-6106	FILE NAME: NORWOOD 6X10		
WEIGHT (LBS): 27555	DRAWN BY: L.P.	DATE: 2/6/2018	PAGE: VIII.F.1

NPCA CERTIFIED PLANT

773 Salem Street-Wilmington, MA | 153 Cranberry Hwy-Rochester, MA | 87 Haverhill Road-Amesbury, MA | 160 Old Turnpike Rd-Nottingham, NH

Specifications subject to change without notice

SHEA CONCRETE PRODUCTS
New England's Premier Precaster
800-696-7432 (SHEA)
www.sheaconcrete.com
MAILING ADDRESS: 87 HAVERHILL RD AMESBURY, MA 01913

PEABODY TRANSFORMER PAD
75-500KVA 72" X 84" X 10"

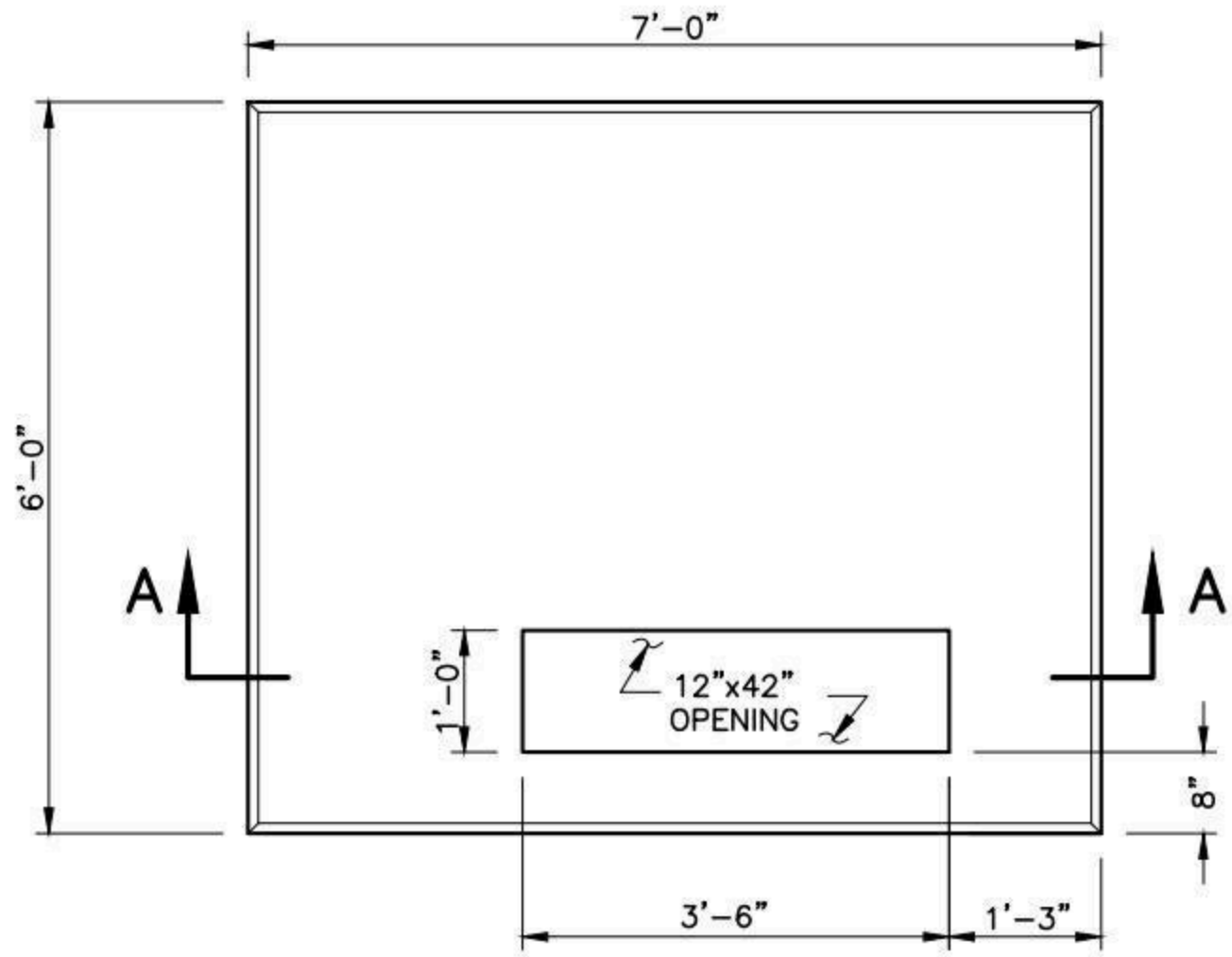

PLAN

SECTION A-A

NOTES:

1. CONCRETE: 5,000 PSI MINIMUM AFTER 28 DAYS.
2. DESIGN LOADING: AASHTO HS20-44, 0 TO 5 FEET COVER.
3. DESIGN SPECIFICATIONS – ACI 318 & AASHTO LOAD FACTOR DESIGN METHOD.
4. STEEL REINFORCEMENT CONFORMS TO ASTM A615, GRADE 60. MINIMUM COVER 1"

SHEA PRODUCT ID: PL75KVATP	FILE NAME: PL 75-500KVA			NPCA CERTIFIED PLANT
WEIGHT (LBS): 5075	DRAWN BY: L.P.	DATE: 5/9/2018	PAGE: VIII.G.1	

Specifications subject to change without notice

SHEA CONCRETE PRODUCTS
New England's Premier Precaster
800-696-7432 (SHEA)
www.sheaconcrete.com
MAILING ADDRESS: 87 HAVERHILL RD AMESBURY, MA 01913

PEABODY TRANSFORMER PAD
750-1500KVA 84' X 84' X 10"

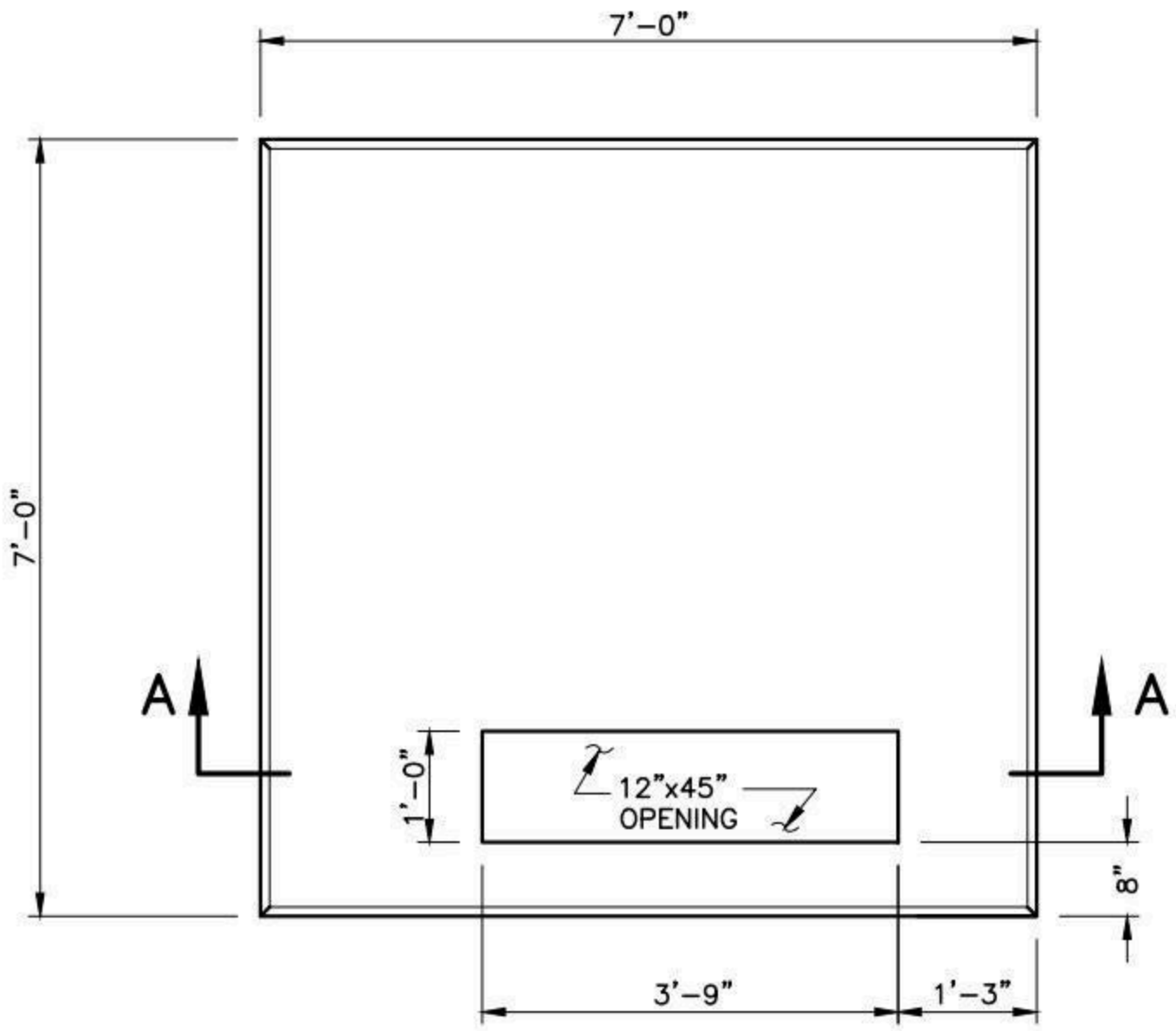

PLAN

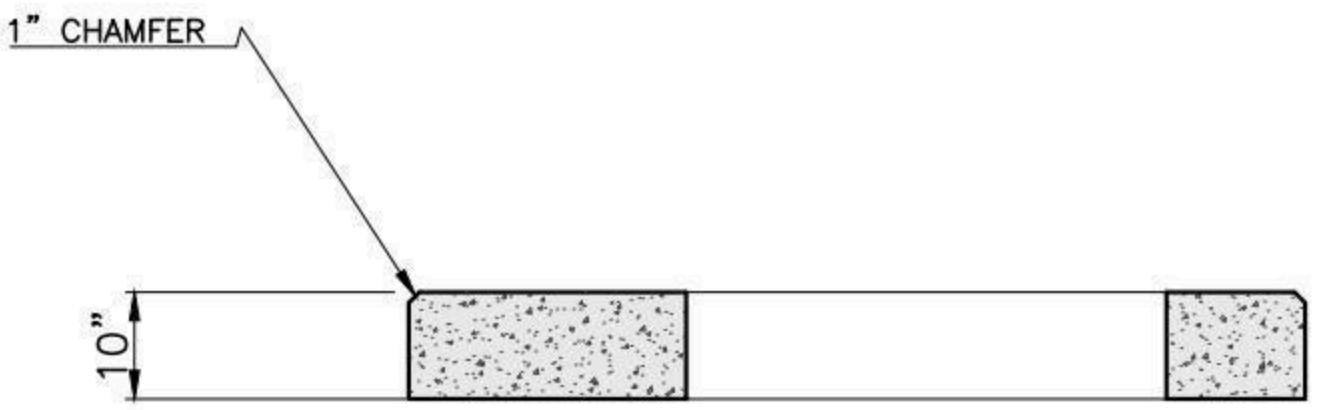

SECTION A-A

NOTES:

1. CONCRETE: 5,000 PSI MINIMUM AFTER 28 DAYS.
2. DESIGN LOADING: AASHTO HS20-44, 0 TO 5 FEET COVER.
3. DESIGN SPECIFICATIONS - ACI 318 & AASHTO LOAD FACTOR DESIGN METHOD.
4. STEEL REINFORCEMENT CONFORMS TO ASTM A615, GRADE 60. MINIMUM COVER 1"

SHEA PRODUCT ID: PL750KVATP	FILE NAME: PL 750-1500KVA		
WEIGHT (LBS): 5925	DRAWN BY: L.P.	DATE: 5/9/2018	PAGE: VIII.G.2

NPCA CERTIFIED PLANT

Specifications subject to change without notice

SHEA CONCRETE PRODUCTS
New England's Premier Precaster
800-696-7432 (SHEA)
www.sheaconcrete.com
MAILING ADDRESS: 87 HAVERHILL RD AMESBURY, MA 01913

READING MUNICIPAL LIGHT HANDHOLE 4' X 6' X 4'

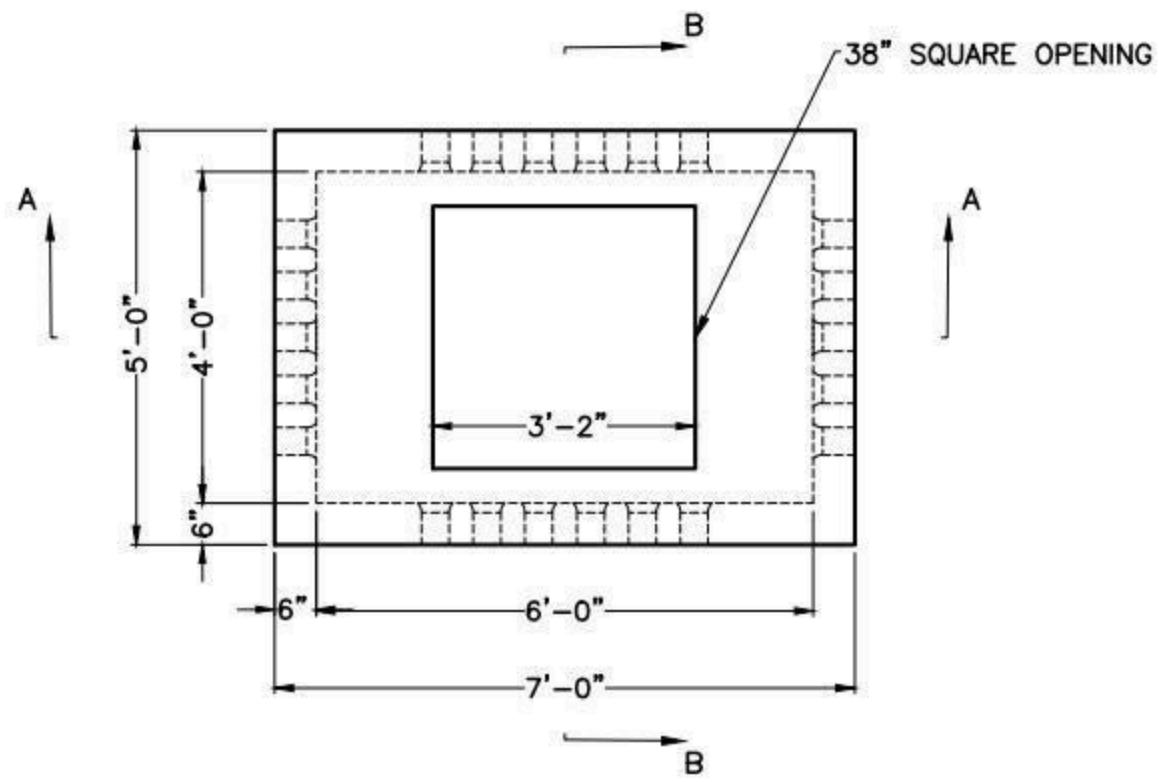

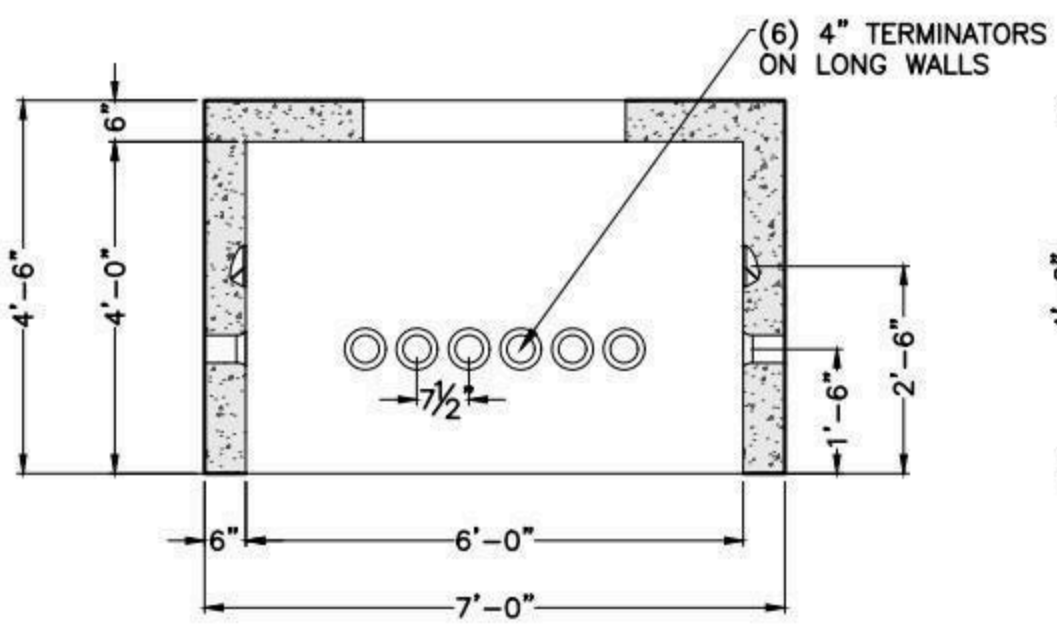

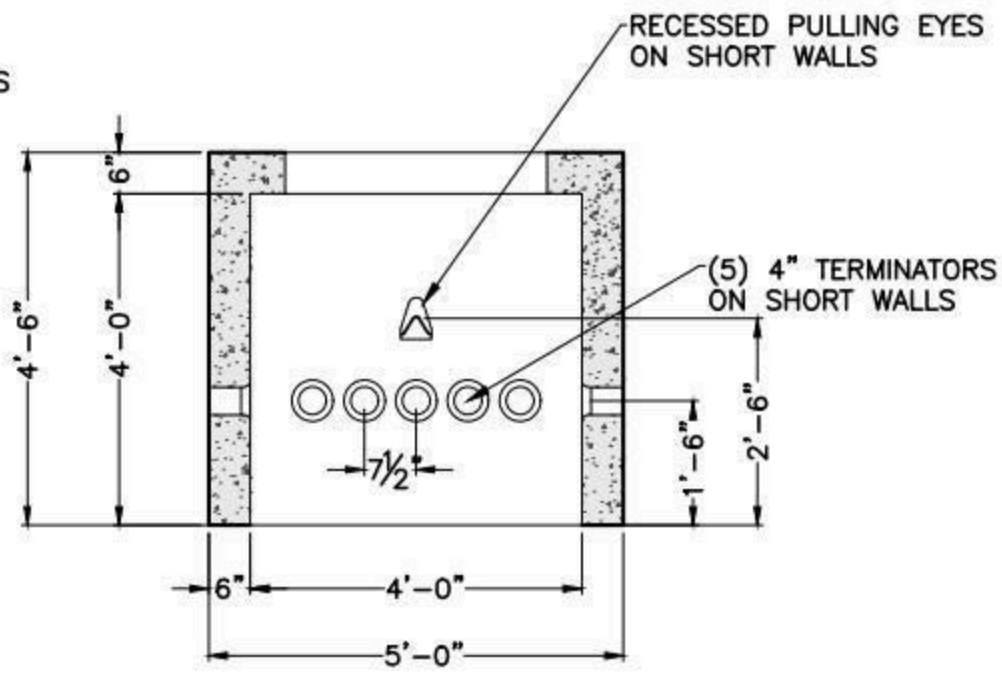

NOTES:

1. CONCRETE: 5,000 PSI MINIMUM AFTER 28 DAYS.
2. DESIGN LOADING: AASHTO HS20-44, 0 TO 5 FEET COVER.
3. STEEL REINFORCEMENT CONFORMS TO ASTM A615, GRADE 60. MINIMUM STEEL COVER 1".

SHEA PRODUCT ID: RLHH-464	FILE NAME: RMLD 4X6		
WEIGHT (LBS): 8190	DRAWN BY: L.P.	DATE: 5/9/2018	PAGE: VIII.H.1

NPCA CERTIFIED PLANT

Specifications subject to change without notice