SHEA CONCRETE PRODUCTS
New England's Premier Precaster
800-696-7432 (SHEA)
www.sheaconcrete.com
BILLING ADDRESS: 87 HAVERHILL RD, AMESBURY MA 01913

MEDIAN BARRIER 2FT DOUBLE FACE

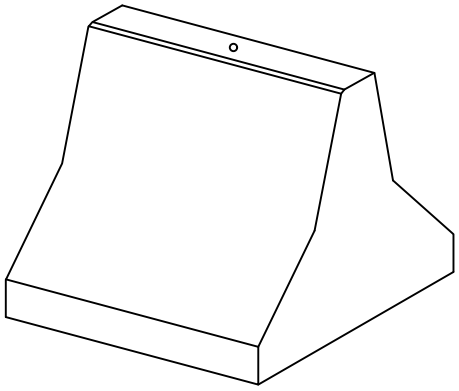

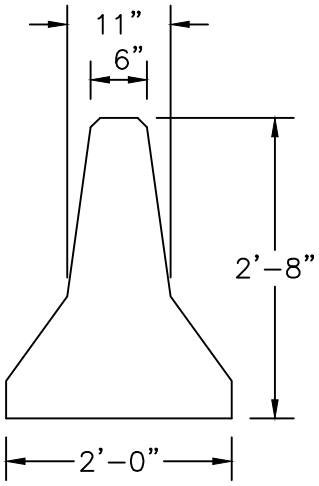

END VIEW

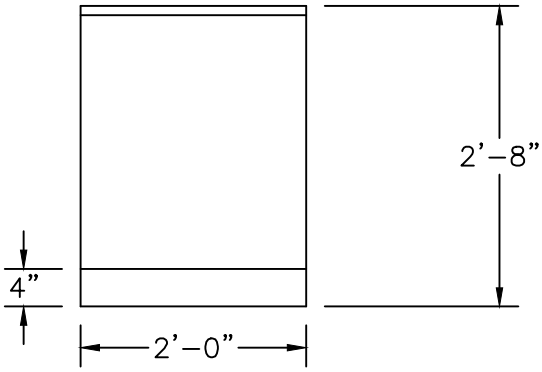

SIDE VIEW

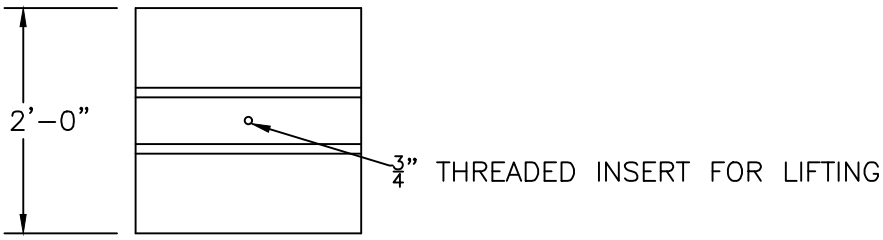

TOP VIEW

NOTES:

1. CONCRETE: 4,000 PSI MINIMUM AFTER 28 DAYS.

SHEA PRODUCT ID: MBDF2	PREPARED FOR:	FILE NAME: medbardf2.dwg	
WEIGHT (LBS): 1,050#	DRAWN BY: ARO	DATE: 03/01/2018	PAGE: J4.4

NPCA CERTIFIED PLANT

Specifications subject to change without notice